| Oversight / NHS | |
|---|---|
| FHWA REGION VIII OVERSIGHT? | ■ NO ☐ YES |
| NATIONAL HIGHWAY SYSTEM? | ■ NO ☐ YES |

# DEPARTMENT OF TRANSPORTATION
# STATE OF COLORADO

## HIGHWAY CONSTRUCTION BID PLANS OF PROPOSED
## COLORADO PROJECT NO. STA 0091-035
## STATE HIGHWAY NO. 9
## SUMMIT COUNTY
## CONSTRUCTION PROJECT CODE NO. 16439

**Related Projects:**
P. E. UNDER PROJECT:
Project Number STA 0091-024
Project Code: 14927

**R.O.W. Projects:**
R.O.W. Project Description
STA 0091-024

### TABULATION OF LENGTH & DESIGN DATA

| STATION | FEET ROADWAY SH 9 | FEET ROADWAY | MAJOR STR. |
|---|---|---|---|
| APPROACH TO PROJECT STA. 59+83.39, MP 88.82 | | | |
| BEGIN STA 0091-035= STA. 131+25.00, MP 90.07 ON SH 9 | 3,653.50 | | |
| STA. 167+78.50 BEGIN STRUCTURE NO. F-12-BW | | | 80.00 |
| STA. 168+58.50 END STRUCTURE NO. F-12-BW | | | |
| END STA 0091-035= STA. 235+60.00, MP 92.02 ON SH 9 | 6,701.50 | | |
| APPROACH TO PROJECT STA. 293+29.54, MP 93.27 | | | |
| TOTALS | 10,355.00 | | 80.00 |

| SUMMARY | Lin. Ft. | Miles |
|---|---|---|
| Roadway (NET LENGTH) | 10,355.00 | 1.961 |
| Major Structure | 80.00 | 0.015 |
| PROJECT GROSS LENGTH | 10,435.00 | 1.976 |

| DESIGN DATA | SH 9 (50 MPH) |
|---|---|
| MAXIMUM DESIGN SPEED | 50 MPH |
| MINIMUM RADIUS OF CURVE | 758 FT |
| MAXIMUM GRADE | 3.51% |
| MINIMUM GRADE | 0.39% |
| K VALUE - CREST | 84 |
| K VALUE - SAG | 96 |
| MAXIMUM SUPERELEVATION | 8.0 % |
| MINIMUM S.S.D. HORIZONTAL | 425 FT |
| MINIMUM S.S.D. VERTICAL | 425 FT |
| CLEAR ZONE DISTANCE | 18 FT |
| 2020 DESIGN TRAFFIC (ADT) | 37,400 |
| DHV | 3,740 |
| DHV % TRUCKS | 2.6% |

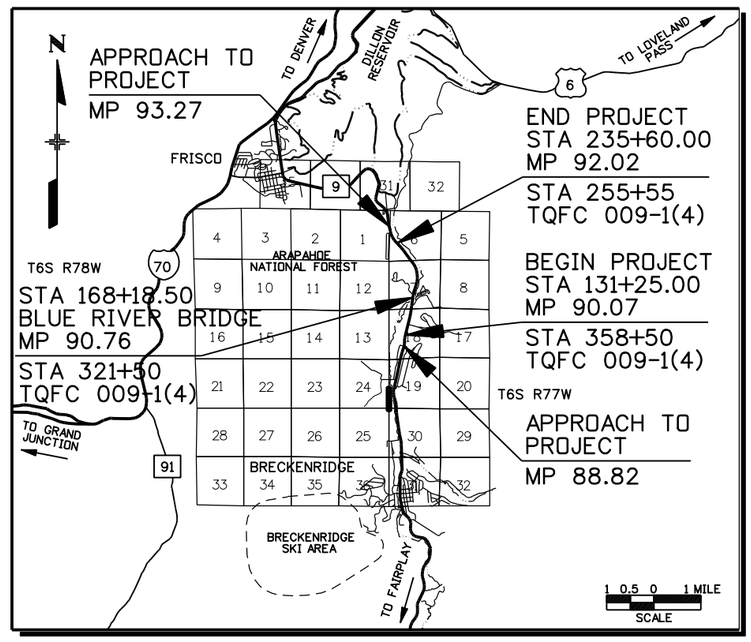


VICINITY MAP SITE NO. 1

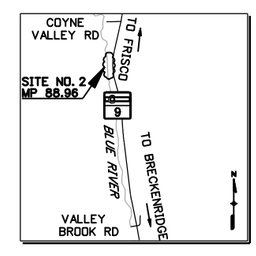


VICINITY MAP SITE NO. 2
STATE HIGHWAY NO. 9 MP 88.96
WETLAND MITIGATION WORK.

### INDEX OF SHEETS AND STANDARDS


| SHEET NO. | DESCRIPTION |
|---|---|
| 1 | TITLE SHEET |
| 2 | STANDARD PLANS LIST |
| 3-9 | TYPICAL SECTIONS |
| 10 | GENERAL NOTES |
| 11-15 | SUMMARY OF QUANTITIES |
| 16 | SUMMARY OF EARTHWORK |
| 17-18 | TABULATION OF REMOVALS |
| 19-21 | TABULATION OF STRUCTURES |
| 22-23 | TABULATION OF SURFACING, CURB & GUTTER |
| 24 | TABULATION OF GUARDRAIL |
| 25-36 | SURVEY CONTROL DIAGRAM |
| 37 | SURVEY TABULATION |
| 38-40 | GEOMETRIC LAYOUTS |
| 41-42 | TRAFFIC VOLUMES |
| 43 | UTILITY GENERAL NOTES AND DETAILS |
| 44-53 | UTILITY PLANS |
| 54 | PIEZOLOOP DETECTOR INSTALLATION DETAIL |
| 55-63 | REMOVAL PLANS |
| 64-88 | BRIDGE PLANS |
| 89-97 | ROADWAY PLANS AND PROFILES |
| 98-104 | INTERSECTION PLANS, PROFILES, AND DETAILS |
| 105 | GATEWAY DRIVE PARKING AREA |
| 106-110 | LOCAL ACCESS PLANS & PROFILES |
| 111 | SHARED USE PATH TYPICAL SECTIONS |
| 112-113 | SHARED USE PATH PLANS AND PROFILES |
| 114-124 | DRAINAGE AND GRADING PLANS |
| 125-131 | STRUCTURE CROSS SECTIONS |
| 132-134 | DRAINAGE DETAILS |
| 135-136 | BLUE RIVER CHANNEL PLANS |
| 137-141 | STORMWATER MANAGEMENT PLAN |
| 142-156 | EROSION CONTROL PLANS/SITE MAP |
| 157 | WETLAND SHEET |
| 158 | TABULATION OF TRAFFIC ENGINEERING |
| 159-161 | TRAFFIC SIGNAL PLANS |
| 162-165 | TABULATION OF SIGNING |
| 166 | TABULATION OF PAVEMENT MARKINGS |
| 167-177 | SIGNING AND PAVEMENT MARKING PLANS |
| 178-184 | POTENTIAL CONSTRUCTION PHASING PLAN |
| CROSS SECTIONS | (UNDER SEPERATE COVER) |
| 1-54 | SH 9 CROSS SECTIONS |
| 55-60 | ACCESS CROSS SECTIONS |
| 61-68 | SHARED USE PATH CROSS SECTIONS |


## FINAL DESK REVIEW
## JANUARY 16, 2009

| | | | |
|---|---|---|---|
| Print Date: 1/26/2009 | | Sheet Revisions | |
| File Name: 16439TitleSheet.dgn | | Date: / Comments / Init. | |
| Horiz. Scale: 1:2 | Vert. Scale: As Noted | R-X | |
| Unit Information | Unit Leader Initials | | |

PBSJ 4601 DTC Boulevard, Suite 700 Denver, CO 80237 Phone: (303) 221-7275 Fax: (303) 221-7276

Colorado Department of Transportation
Mountain Residency, P.O. Box 399
Dumont, CO 80436
Phone: 303-512-5750 FAX: 303-512-5775
Region 1 DCW

| As Constructed | Contract Information | Project No./Code |
|---|---|---|
| No Revisions: | Contractor: | STA 0091-035 |
| Revised: | Resident Engineer: | 16439 |
| Void: | Project Engineer: | Sheet Number 1 |
| | PROJECT STARTED: ACCEPTED: | |
| | Comments: | |

21698 8:31:35 AM S:\Tranproj\246220-05\14927\Consultants\Plot_Sets\SHELF\16439TitleSheet.dgn

| PLAN NUMBER | NEW OR REVISED | M STANDARD TITLE | PAGE NUMBER |
|---|---|---|---|
| ■ M-100-1 | ☐ | STANDARD SYMBOLS (3 SHEETS) | 1-3 |
| ■ M-203-1 | ☐ | APPROACH ROADS | 4 |
| ☐ M-203-2 | ☐ | DITCH TYPES | 5 |
| ■ M-203-11 | ☐ | SUPERELEVATION CROWNED AND DIVIDED HIGHWAYS (3 SHEETS) | 6-8 |
| ■ M-203-12 | ☐ | SUPERELEVATION STREETS (2 SHEETS) | 9-10 |
| ■ M-206-1 | ☐ | EXCAVATION AND BACKFILL FOR STRUCTURES (2 SHEETS) | 11-12 |
| ■ M-206-2 | ☐ | EXCAVATION AND BACKFILL FOR BRIDGES (2 SHEETS) | 13-14 |
| ■ M-208-1 | ☐ | TEMPORARY EROSION CONTROL (7 SHEETS) | 15-21 |
| ■ M-210-1 | ☐ | MAILBOX SUPPORTS (2 SHEETS) | 22-23 |
| ☐ M-214-1 | ☐ | PLANTING DETAILS | 24 |
| ☐ M-412-1 | ☐ | CONCRETE PAVEMENT JOINTS (5 SHEETS) | 25-29 |
| ☐ M-510-1 | ☐ | STRUCTURAL PLATE PIPE H-20 LOADING | 30 |
| ☐ M-601-1 | ☐ | SINGLE CONCRETE BOX CULVERT (2 SHEETS) | 31-32 |
| ☐ M-601-2 | ☐ | DOUBLE CONCRETE BOX CULVERT (2 SHEETS) | 33-34 |
| ☐ M-601-3 | ☐ | TRIPLE CONCRETE BOX CULVERT (2 SHEETS) | 35-36 |
| ☐ M-601-10 | ☐ | HEADWALL FOR PIPES | 37 |
| ☐ M-601-11 | ☐ | TYPE "S" SADDLE HEADWALLS FOR PIPE | 38 |
| ■ M-601-12 | ☐ | HEADWALLS AND PIPE OUTLET PAVING | 39 |
| ☐ M-601-20 | ☐ | WINGWALLS FOR PIPE OR BOX CULVERTS | 40 |
| ☐ M-603-1 | ☐ | METAL AND PLASTIC PIPE (2 SHEETS) | 41-42 |
| ■ M-603-2 | ☐ | REINFORCED CONCRETE PIPE | 43 |
| ☐ M-603-3 | ☐ | PRECAST CONCRETE BOX CULVERT | 44 |
| ■ M-603-10 | ☐ | CONCRETE AND METAL END SECTIONS (2 SHEETS) | 45-46 |
| ■ M-604-10 | ☐ | INLET, TYPE C | 47 |
| ☐ M-604-11 | ☐ | INLET, TYPE D | 48 |
| ■ M-604-12 | ☐ | CURB INLET TYPE R (2 SHEETS) | 49-50 |
| ☐ M-604-13 | ☐ | CONCRETE INLET TYPE 13 | 51 |
| ■ M-604-20 | ☐ | MANHOLES (3 SHEETS) | 52-54 |
| ☐ M-604-25 | ☐ | VANE GRATE INLET (5 SHEETS) | 55-59 |
| ☐ M-605-1 | ☐ | SUBSURFACE DRAINS | 60 |
| ☐ M-606-1 | ☐ | GUARDRAIL TYPE 3 W-BEAM (16 SHEETS) | 61-76 |
| ☐ M-606-13 | ☐ | GUARDRAIL TYPE 7 F-SHAPE BARRIER (4 SHEETS) | 77-80 |
| ☐ M-606-14 | ☐ | PRECAST TYPE 7 CONCRETE BARRIER (3 SHEETS) | 81-83 |

| PLAN NUMBER | NEW OR REVISED | M STANDARD TITLE | PAGE NUMBER |
|---|---|---|---|
| ■ M-607-1 | ☐ | WIRE FENCES AND GATES (3 SHEETS) | 84-86 |
| ☐ M-607-2 | ☐ | CHAIN LINK FENCE (3 SHEETS) | 87-89 |
| ☐ M-607-3 | ☐ | BARRIER FENCE | 90 |
| ☐ M-607-4 | ☐ | DEER FENCE AND GATES (2 SHEETS) | 91-92 |
| ☐ M-607-10 | ☐ | PICKET SNOW FENCE | 93 |
| ☐ M-607-15 | ☐ | ROAD CLOSURE GATE (9 SHEETS) | 94-102 |
| ☐ M-608-1 | ☐ | CURB RAMPS (4 SHEETS) | 103-106 |
| ■ M-609-1 | ☐ | CURBS, GUTTERS, AND SIDEWALKS (3 SHEETS) | 107-109 |
| ☐ M-611-1 | ☐ | CATTLE GUARD (2 SHEETS) | 110-111 |
| ☐ M-613-1 | ☐ | ROADWAY LIGHTING (4 SHEETS) | 112-115 |
| ☐ M-614-1 | ☐ | RUMBLE STRIPS (3 SHEETS) | 116-118 |
| ☐ M-614-2 | ☐ | SAND BARREL ARRAYS (2 SHEETS) | 119-120 |
| ☐ M-615-1 | ☐ | EMBANKMENT PROTECTOR TYPE 3 | 121 |
| ■ M-615-2 | ☐ | EMBANKMENT PROTECTOR TYPE 5 | 122 |
| ☐ M-616-1 | ☐ | INVERTED SIPHON | 123 |
| ☐ M-620-1 | ☐ | FIELD LABORATORY CLASS 1 | 124 |
| ■ M-620-2 | ☐ | FIELD LABORATORY CLASS 2 | 125 |
| ☐ M-620-11 | ☐ | FIELD OFFICE CLASS 1 | 126 |
| ■ M-620-12 | ☐ | FIELD OFFICE CLASS 2 | 127 |
| ■ M-629-1 | ☐ | SURVEY MONUMENTS (2 SHEETS) | 128-129 |

| PLAN NUMBER | NEW OR REVISED | S STANDARD TITLE | PAGE NUMBER |
|---|---|---|---|
| ■ S-612-1 | ☐ | DELINEATOR INSTALLATIONS (5 SHEETS) | 131-135 |
| ■ S-614-1 | ☐ | GROUND SIGN PLACEMENT (2 SHEETS) | 136-137 |
| ■ S-614-2 | ☐ | CLASS I SIGNS | 138 |
| ■ S-614-3 | ☐ | CLASS II SIGNS | 139 |
| ☐ S-614-4 | ☐ | CLASS III SIGNS (3 SHEETS) | 140-142 |
| ■ S-614-5 | ☐ | BREAK-AWAY SIGN SUPPORT DETAILS FOR GROUND SIGNS (2 SHEETS) | 143-144 |
| ☐ S-614-6 | ☐ | CONCRETE FOOTINGS AND SIGN ISLANDS FOR CLASS III SIGNS (2 SHEETS) | 145-146 |
| ■ S-614-8 | ☐ | TUBULAR STEEL SIGN SUPPORT DETAILS (5 SHEETS) | 147-151 |
| ☐ S-614-10 | ☐ | MARKER ASSEMBLY INSTALLATIONS | 152 |
| ■ S-614-12 | ☐ | STRUCTURE NUMBER INSTALLATION | 153 |
| ☐ S-614-14 | ☐ | FLASHING BEACON AND SIGN INSTALLATIONS (3 SHEETS) | 154-156 |
| ☐ S-614-20 | ☐ | TYPICAL POLE MOUNT SIGN INSTALLATIONS | 157 |
| ☐ S-614-21 | ☐ | CONCRETE BARRIER SIGN POST INSTALLATIONS | 158 |
| ☐ S-614-22 | ☐ | TYPICAL MULTI-SIGN INSTALLATIONS | 159 |
| ■ S-614-40 | ☐ | TYPICAL TRAFFIC SIGNAL INSTALLATION DETAILS (7 SHEETS) | 160-166 |
| ☐ S-614-40A | ☐ | ALTERNATIVE TRAFFIC SIGNAL INSTALLATION DETAILS (5 SHEETS) | 167-171 |
| ☐ S-614-50 | ☐ | MONOTUBE OVERHEAD SIGNS (14 SHEETS) | 172-185 |
| ■ S-627-1 | ☐ | PAVEMENT MARKINGS (5 SHEETS) | 186-190 |
| ☐ S-630-1 | ■ | TRAFFIC CONTROLS FOR HIGHWAY CONSTRUCTION (12 SHEETS) | 191-202 |
| ■ S-630-2 | ☐ | BARRICADES, DRUMS, CONCRETE BARRIERS (TEMP.) AND VERTICAL PANELS | 203 |
| ☐ S-630-3 | ☐ | FLASHING BEACON (PORTABLE) DETAILS | 204 |

THE STANDARD PLAN SHEETS INDICATED HEREON BY A MARKED BOX ARE TO BE USED TO CONSTRUCT THIS PROJECT.

ALL OF THE M&S STANDARD PLANS, AS SUPPLEMENTED AND REVISED, APPLY TO THIS PROJECT WHEN USED BY DESIGNATED PAY ITEM OR SUBSIDIARY ITEM.

COLORADO
DEPARTMENT OF TRANSPORTATION

# STANDARD PLANS LIST
# M&S STANDARDS
July 04, 2006

Print Date: 1/26/2009
File Name: 16439StandardPlanList.dgn
Horiz. Scale: 1:1 Vert. Scale: As Noted
Unit Information Unit Leader Initials

PBSJ 4601 DTC Boulevard, Suite 700
Denver, CO 80237
Phone: (303) 221-7275 Fax: (303) 221-7276

R-X

| Sheet Revisions | | |
|---|---|---|
| Date: | Comments | Init. |
| | | |
| | | |
| | | |
| | | |

Colorado Department of Transportation
Mountain Residency, P.O. Box 399
Dumont, CO 80436
Phone: 303-512-5750 FAX: 303-512-5775
Region 1 DCW

As Constructed
No Revisions:
Revised:
Void:

STANDARD PLANS LIST

Designer: SLZ
Detailer: SLZ
Sheet Subset: STANDARD
Structure Numbers
Subset Sheets: 1 of 1

Project No./Code
STA 0091-035
16439
Sheet Number 2

21698 8:33:15 AM S:\Tranproj\246220-05\14927\Consultants\Plot_Sets\SHELF\16439StandardPlanList.dgn

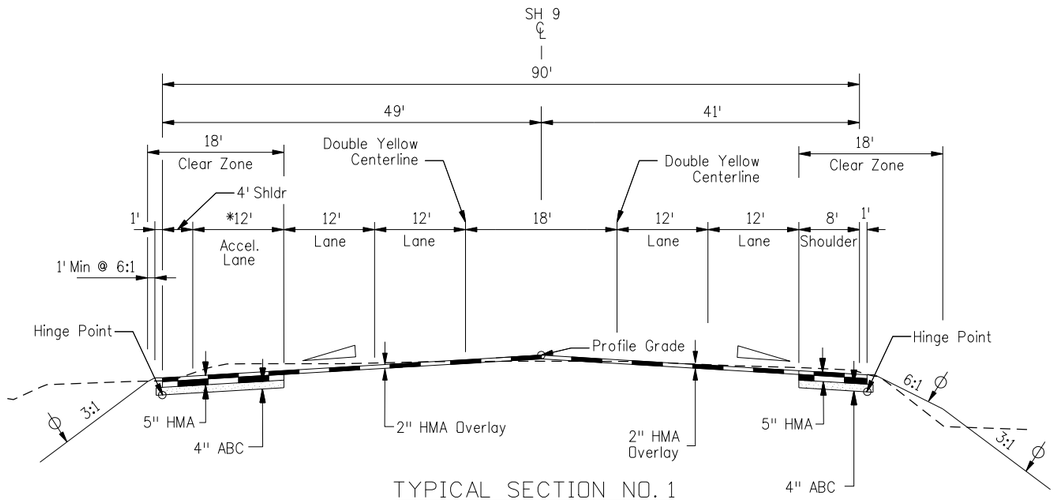


## TYPICAL SECTION NO. 1

STA: 131+25.00 to 134+28.88

* Transition Accel Lane from 0-12' and Left Shoulder from 8'-4' between Sta: 131+74.62 to 133+54.62

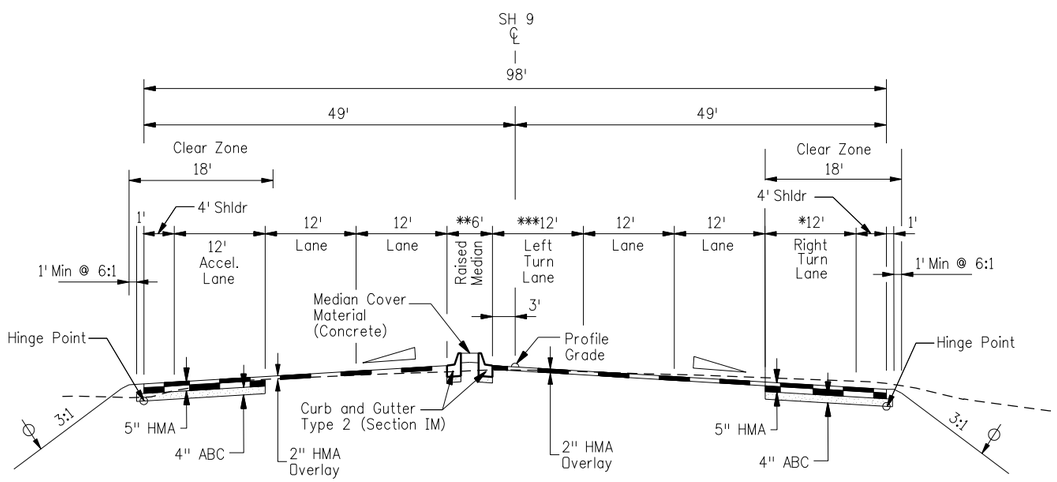


## TYPICAL SECTION NO. 2

STA: 134+28.88 to 142+50.00

STA: 140+00.00 to 142+50.00 - Tiger Rd. Intersection (Full Depth Construction, Use Flexible Pavement Section)

*Transition Right Turn Lane from 0-12' and Right Shoulder from 8'-4' Between Sta: 134+78.88 to 136+58.88
**Transition Raised Median from 18'-6' Between Sta: 134+28.88 to 136+08.88
***Transition Left Turn Lane from 0-12' Between Sta: 134+28.88 to 136+08.88

## TYPICAL SECTION NOTES

The contractor will be required to apply soil conditioners along this line after completion of paving operations.

Break points in slopes and in bottom of ditches shall be rounded during construction for a pleasing appearance.

2% roadway slope (Typical). For specific cross slopes, see roadway profiles and cross section sheets.

Vertical alignment points.

The gradient and width of roadway ditches, and excavation and embankment slope rates may be adjusted by the engineer to assure adequate drainage and slope stability. All adjustments shall be coordinated with the engineer prior to implementation.

See Removal Plans for limits of pavement removal and sawcut lines.

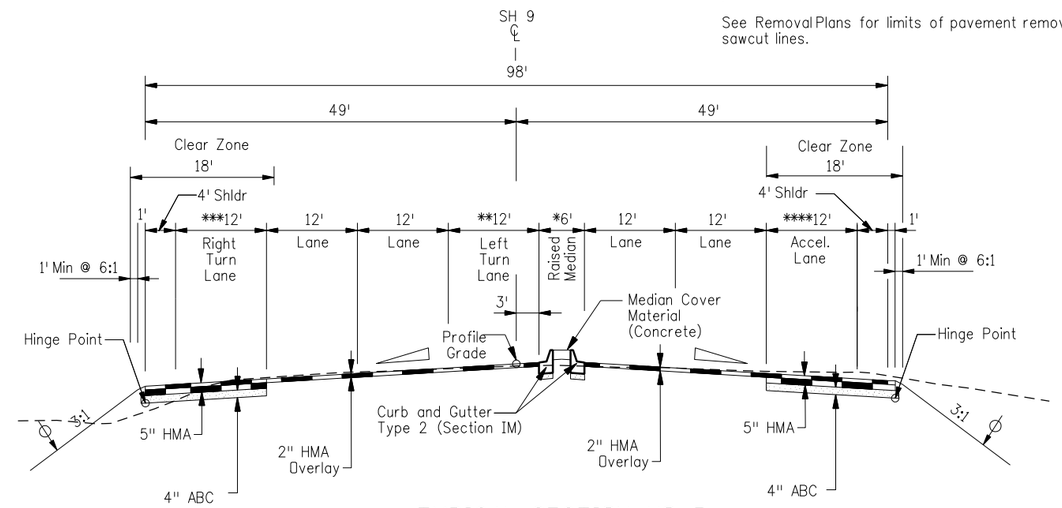


## TYPICAL SECTION NO. 3

STA: 142+50.00 to 149+04.23

STA: 147+00.00 to 149+04.23 Transition to Typical Section NO. 4

*Transition Raised Median from 6'-18' Between Sta: 147+24.23 to 149+04.23
**Transition Left Turn Lane from 12'-0' Between Sta: 147+24.23 to 149+04.23
***Transition Right Turn Lane from 12'-0' and Left Shoulder from 4'-8' Between Sta: 146+04.23 to 147+84.23
****Transition Right Accel. Lane from 12'-0' and Right Shoulder from 4'-8' Between Sta: 148+94.97 to 150+74.97

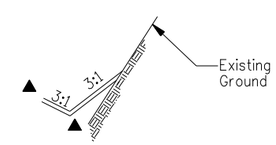


## TYPICAL DITCH TREATMENT

See Cross Sections for Ditch Locations and Ditch Invert Elevations

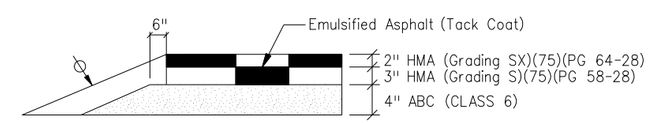


## SH-9 - FLEXIBLE PAVEMENT SECTION FULL DEPTH RECONSTRUCTION

| | | | |
|---|---|---|---|
| Print Date: 1/26/2009 | | | |
| File Name: Tiger to Agape-Typicals.dgn | | | |
| Horiz. Scale: 1:20 | Vert. Scale: As Noted | | |
| Unit Information | Unit Leader Initials | | |

R-X

**Sheet Revisions**

| Date: | Comments | Init. |
|---|---|---|
| | | |
| | | |
| | | |
| | | |

Colorado Department of Transportation
DOT
DEPARTMENT OF TRANSPORTATION
Mountain Residency P.O. Box 399
Dumont, CO 80436
Phone: 303-512-5750 FAX: 303-512-5775
Region 1 DCW

As Constructed
No Revisions:
Revised:
Void:

SH 9
TYPICAL SECTIONS

| | | | |
|---|---|---|---|
| Designer: | TJT | Structure Numbers | |
| Detailer: | TJT | | |
| Sheet Subset: | TYPICALS | Subset Sheets: | 1 OF 7 |

Project No./Code
STA 0091-035
16439
Sheet Number 3

21698 8:34:45 AM S:\Tranproj\246220-05\14927\Consultants\Plot_Sets\SHELF\Tiger to Agape-Typicals.dgn

## TYPICAL SECTION NOTES

- The contractor will be required to apply soil conditioners along this line after completion of paving operations.
- Break points in slopes and in bottom of ditches shall be rounded during construction for a pleasing appearance.
- 2% roadway slope (Typical). For specific cross slopes, see roadway profiles and cross section sheets.
- Vertical alignment points.

The gradient and width of roadway ditches, and excavation and embankment slope rates may be adjusted by the engineer to assure adequate drainage and slope stability. All adjustments shall be coordinated with the engineer prior to implementation.

See Removal Plans for limits of pavement removal and sawcut lines.

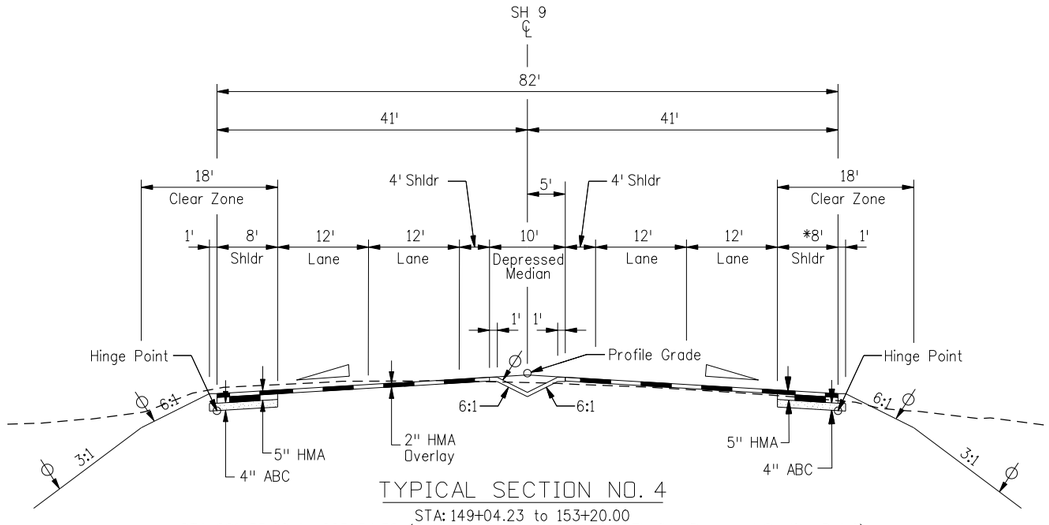


### TYPICAL SECTION NO. 4

STA: 149+04.23 to 153+20.00
STA: 221+55.00 to 225+54.32 (Full Depth Reconstruction, See Flexible Pavement Section Detail)

* Transition Right Turn Lane from 12'-0' and Right Shoulder from 4'-8' Between Sta: 14894.97 to 150+74.97

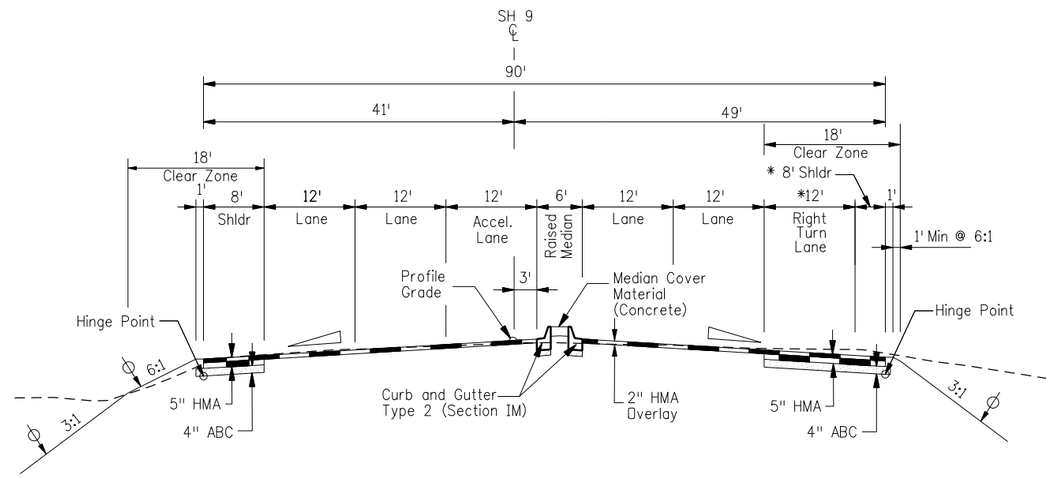


### TYPICAL SECTION NO. 6

STA: 157+50.00 to 162+00.00

*Transition Right Turn Lane from 0'-12' and Right Shoulder from 8' to 4' Between Sta: 157+00 to 158+80

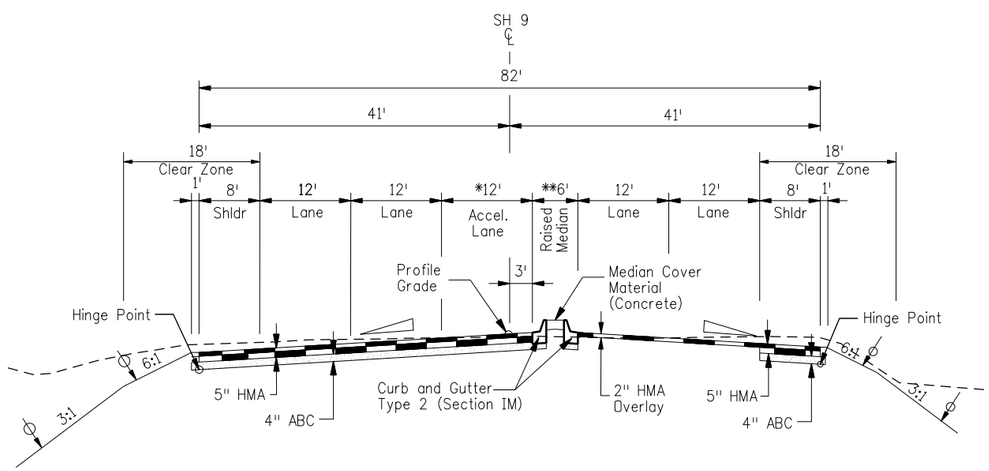


### TYPICAL SECTION NO. 5

STA: 153+20.00 to 157+50.00

* Transition Accel. Lane from 0'-12' between Sta: 153+20 to 155+00
** Transition Raised Median from 18' to 6' between Sta: 153+20 to 155+00

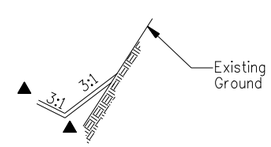


### TYPICAL DITCH TREATMENT

See Cross Sections for Ditch Locations and Ditch Invert Elevations

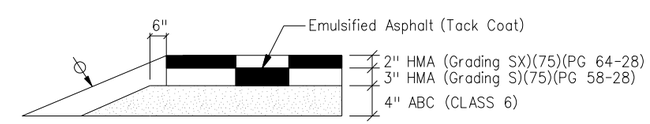


### SH-9 - FLEXIBLE PAVEMENT SECTION FULL DEPTH RECONSTRUCTION

| | | | |
|---|---|---|---|
| Print Date: 1/26/2009 | | | |
| File Name: Tiger to Agape-Typicals.dgn | | | |
| Horiz. Scale: 1:20 | Vert. Scale: As Noted | | |
| Unit Information | Unit Leader Initials | | |

R-X

**Sheet Revisions**

| Date: | Comments | Init. |
|---|---|---|
| | | |
| | | |
| | | |
| | | |

Colorado Department of Transportation
DOT
Mountain Residency P.O. Box 399
Dumont, CO 80436
Phone: 303-512-5750 FAX: 303-512-5775
Region 1 DCW

As Constructed
No Revisions:
Revised:
Void:

SH 9
TYPICAL SECTIONS

| | | | |
|---|---|---|---|
| Designer: | TJT | Structure Numbers | |
| Detailer: | TJT | | |
| Sheet Subset: TYPICALS | | Subset Sheets: | 2 OF 7 |

Project No./Code
STA 0091-035
16439
Sheet Number 4

21698 8:34:57 AM S:\Tranproj\246220-05\14927\Consultants\Plot_Sets\SHELF\Tiger to Agape-Typicals.dgn

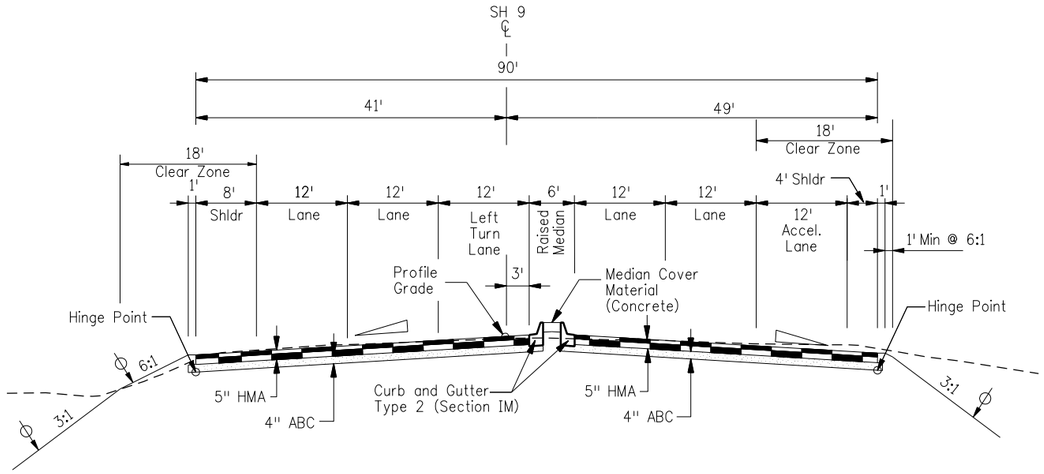


## TYPICAL SECTION NO. 7

STA: 162+00.00 to 167+95.00 Transition Through Revette Dr. Intersection (162+00-163+00)

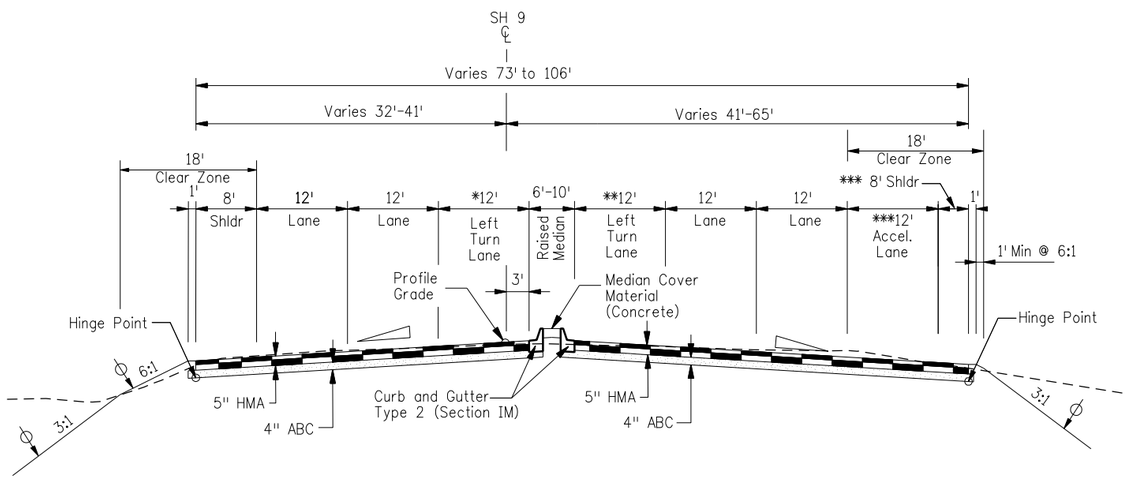


## TYPICAL SECTION NO. 8

STA: 167+95.00 to 171+90.00, See Bridge Plans Between Stations: 167+78.50 to 168+58.50
Median Varies From 6' to 10' See Roadway Plan Sheets

* Transition Left Turn Lane From 0'-12' Between Sta: 167+95 to 169+75
** Transition Left Turn Lane From 0'-12' Between Sta: 168+55 to 170+35
*** Transition Accel. Lane From 12'-0' and Right Shoulder From 4' to 8' Between Sta: 170+30 to 171+90

## TYPICAL SECTION NOTES

- The contractor will be required to apply soil conditioners along this line after completion of paving operations.
- Break points in slopes and in bottom of ditches shall be rounded during construction for a pleasing appearance.
- 2% roadway slope (Typical). For specific cross slopes, see roadway profiles and cross section sheets.
- Vertical alignment points.

The gradient and width of roadway ditches, and excavation and embankment slope rates may be adjusted by the engineer to assure adequate drainage and slope stability. All adjustments shall be coordinated with the engineer prior to implementation.

See Removal Plans for limits of pavement removal and sawcut lines.

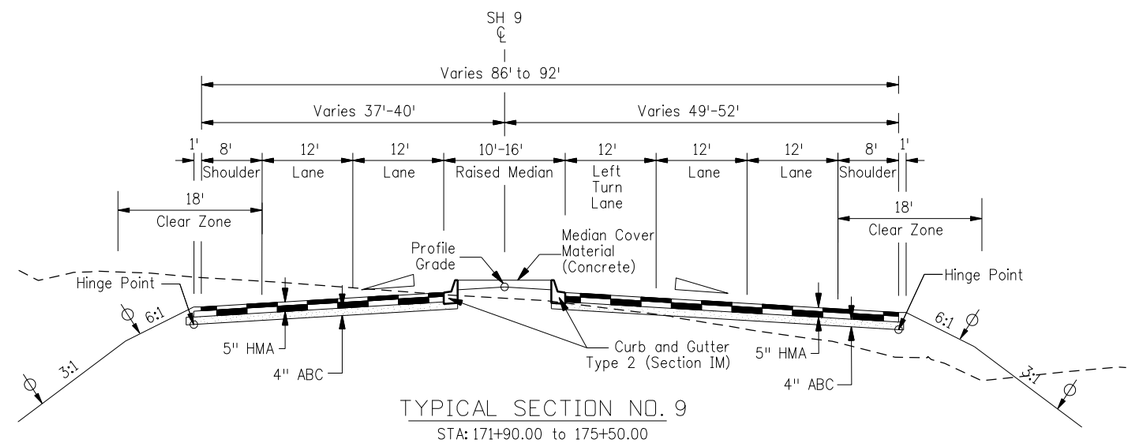


## TYPICAL SECTION NO. 9

STA: 171+90.00 to 175+50.00

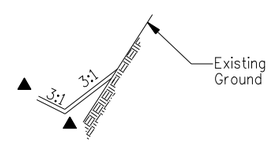


## TYPICAL DITCH TREATMENT

See Cross Sections for Ditch Locations
and Ditch Invert Elevations

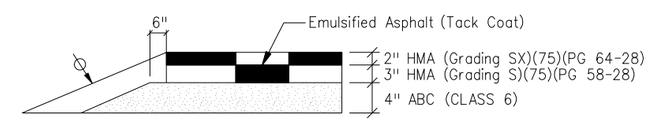


## SH-9 - FLEXIBLE PAVEMENT SECTION FULL DEPTH RECONSTRUCTION

| | | | | | |
|---|---|---|---|---|---|
| Print Date: 1/26/2009 | | Sheet Revisions | | | |
| File Name: Tiger to Agape-Typicals.dgn | | Date: | Comments | Init. | |
| Horiz. Scale: 1:20 Vert. Scale: As Noted | R-X | | | | |
| Unit Information Unit Leader Initials | | | | | |

Colorado Department of Transportation
DOT
Mountain Residency P.O. Box 399
Dumont, CO 80436
Phone: 303-512-5750 FAX: 303-512-5775
Region 1 DCW

As Constructed
No Revisions:
Revised:
Void:

SH 9
TYPICAL SECTIONS

Designer: TJT
Detailer: TJT
Structure Numbers
Sheet Subset: TYPICALS
Subset Sheets: 3 OF 7

Project No./Code
STA 0091-035
16439
Sheet Number 5

21698 8:35:09 AM S:\Tranproj\246220-05\14927\Consultants\Plot_Sets\SHELF\Tiger to Agape-Typicals.dgn

## TYPICAL SECTION NOTES

- The contractor will be required to apply soil conditioners along this line after completion of paving operations.
- Break points in slopes and in bottom of ditches shall be rounded during construction for a pleasing appearance.
- 2% roadway slope (Typical). For specific cross slopes, see roadway profiles and cross section sheets.
- Vertical alignment points.

The gradient and width of roadway ditches, and excavation and embankment slope rates may be adjusted by the engineer to assure adequate drainage and slope stability. All adjustments shall be coordinated with the engineer prior to implementation.

See Removal Plans for limits of pavement removal and sawcut lines.

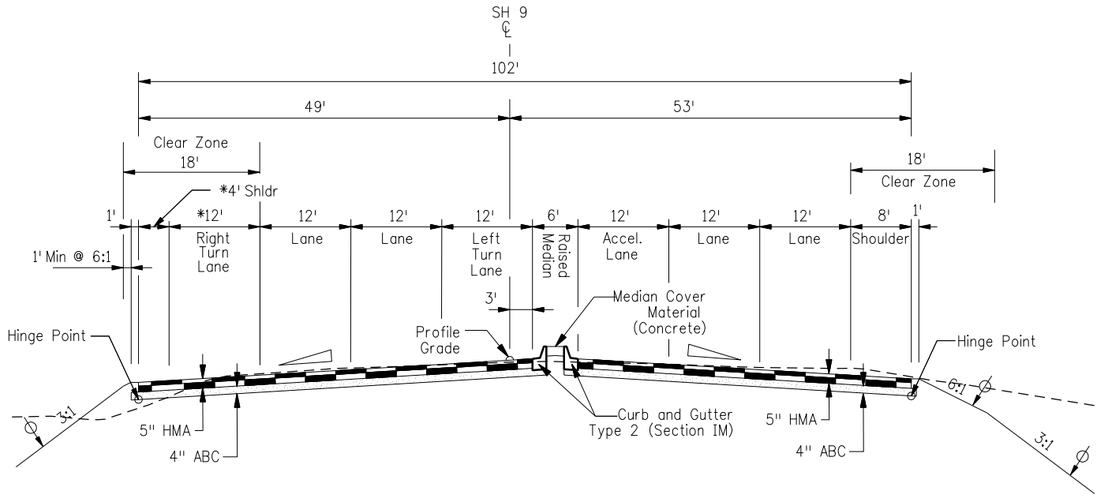


## TYPICAL SECTION NO. 10

STA: 175+50.00 to 180+20.00 Transition to Typical Section NO. 11

* Transition Right Turn Lane from 12'-0' and Right Shoulder From 4' to 8' Between Sta: 179+05 to 180+85

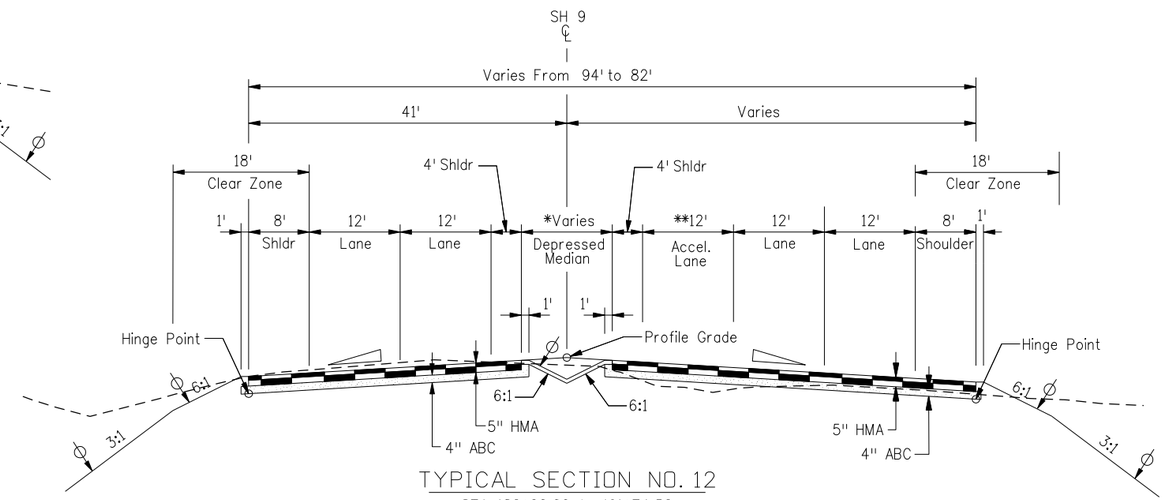


## TYPICAL SECTION NO. 12

STA: 182+00.00 to 191+74.52

* Depressed Median Varies From 10' to 22' See Roadway Plans and Cross Sections
** Transition Accel. Lane From 12' to 0' Between Sta: 183+00 to 184+80

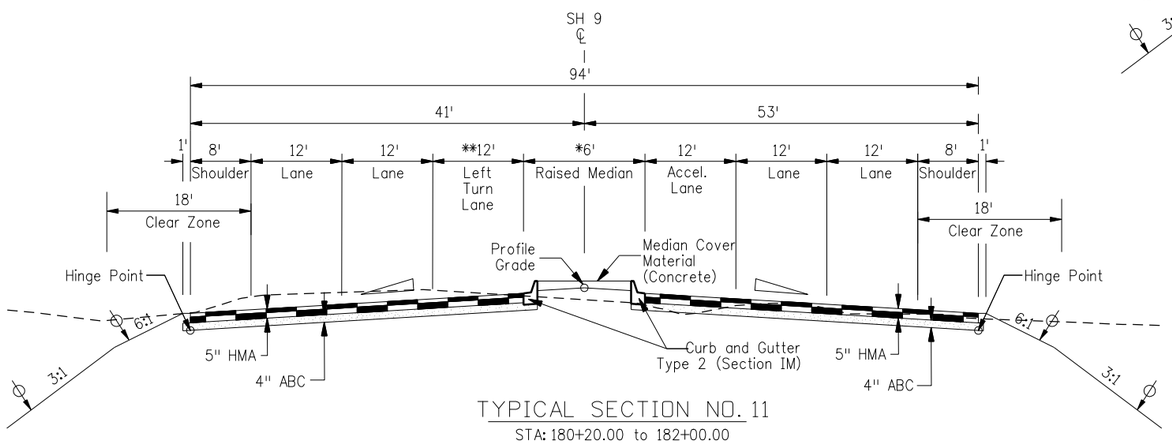


## TYPICAL SECTION NO. 11

STA: 180+20.00 to 182+00.00

* Transition Raised Median From 6' to 18' Between Sta: 180+20.00 and 182+00.00
** Transition Left Turn Lane From 12' to 0' Between Sta: 180+20.00 and 182+00.00

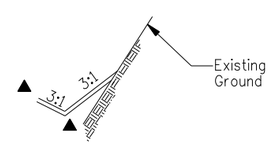


## TYPICAL DITCH TREATMENT

See Cross Sections for Ditch Locations and Ditch Invert Elevations

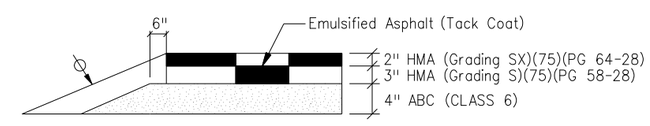


## SH-9 - FLEXIBLE PAVEMENT SECTION FULL DEPTH RECONSTRUCTION

| | | | | | |
|---|---|---|---|---|---|
| Print Date: 1/26/2009 | | Sheet Revisions | | | |
| File Name: Tiger to Agape-Typicals.dgn | | Date: | Comments | Init. | |
| Horiz. Scale: 1:20 Vert. Scale: As Noted | R-X | | | | |
| Unit Information Unit Leader Initials | | | | | |

Colorado Department of Transportation
Mountain Residency P.O. Box 399
Dumont, CO 80436
Phone: 303-512-5750 FAX: 303-512-5775
Region 1 DCW

| As Constructed | SH 9 TYPICAL SECTIONS | | | Project No./Code |
|---|---|---|---|---|
| No Revisions: | | | | STA 0091-035 |
| Revised: | Designer: TJT | Structure Numbers | | 16439 |
| | Detailer: TJT | | | |
| Void: | Sheet Subset: TYPICALS | Subset Sheets: 4 OF 7 | | Sheet Number 6 |

21698 8:35:22 AM S:\Tranpro\246220-05\14927\Consultants\Plot_Sets\SHELF\Tiger to Agape-Typicals.dgn

## TYPICAL SECTION NOTES

- The contractor will be required to apply soil conditioners along this line after completion of paving operations.
- Break points in slopes and in bottom of ditches shall be rounded during construction for a pleasing appearance.
- 2% roadway slope (Typical). For specific cross slopes, see roadway profiles and cross section sheets.
- Vertical alignment points.

The gradient and width of roadway ditches, and excavation and embankment slope rates may be adjusted by the engineer to assure adequate drainage and slope stability. All adjustments shall be coordinated with the engineer prior to implementation.

See Removal Plans for limits of pavement removal and sawcut lines.

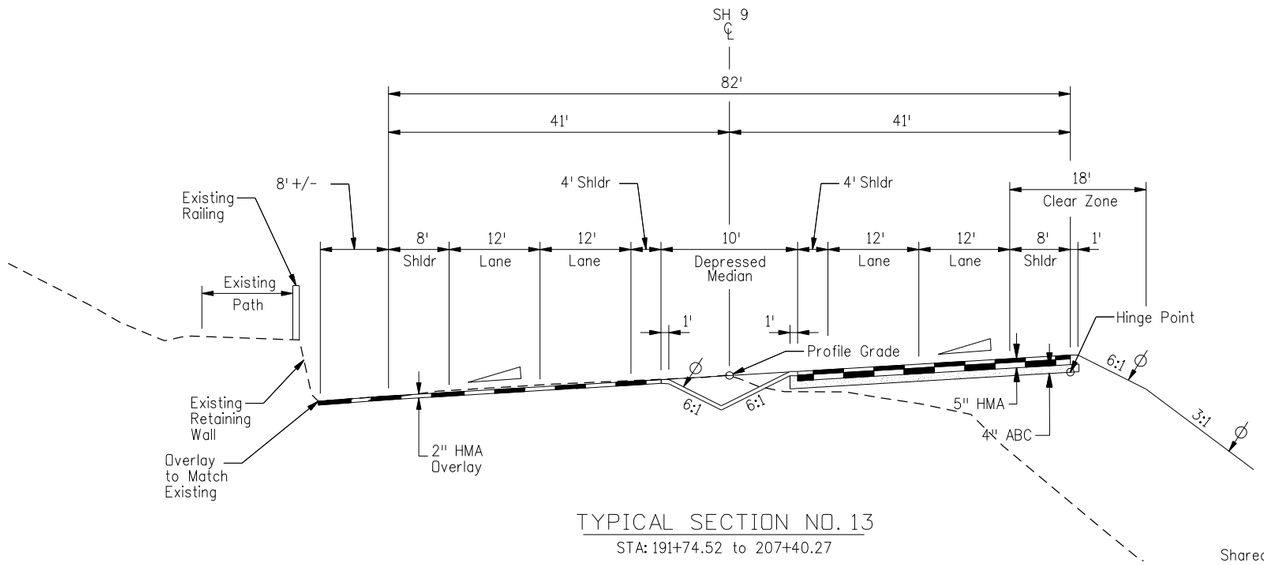


### TYPICAL SECTION NO. 13

STA: 191+74.52 to 207+40.27

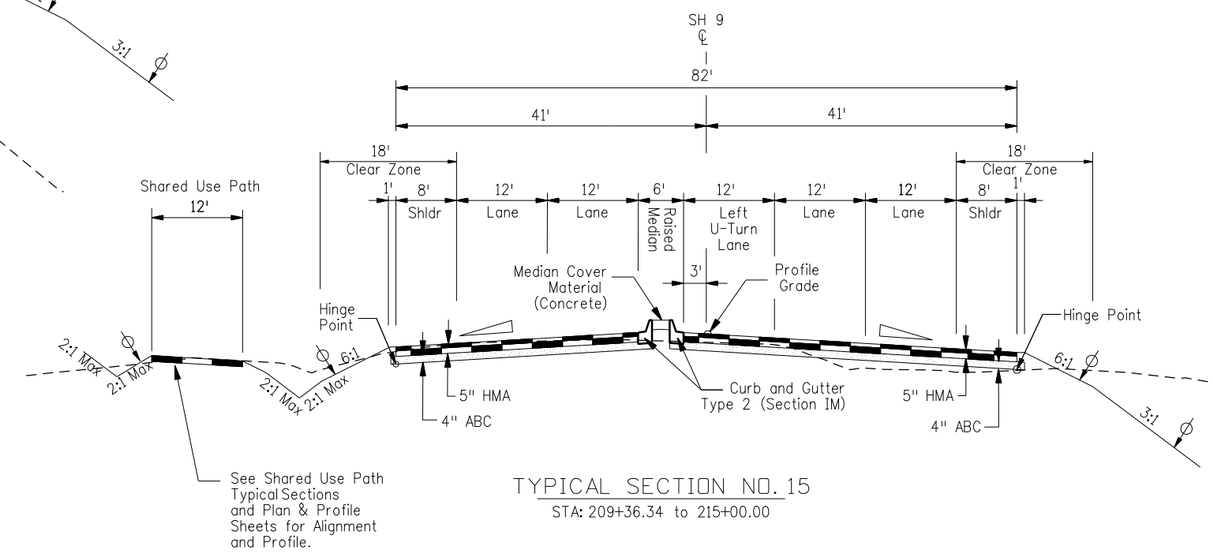


### TYPICAL SECTION NO. 15

STA: 209+36.34 to 215+00.00

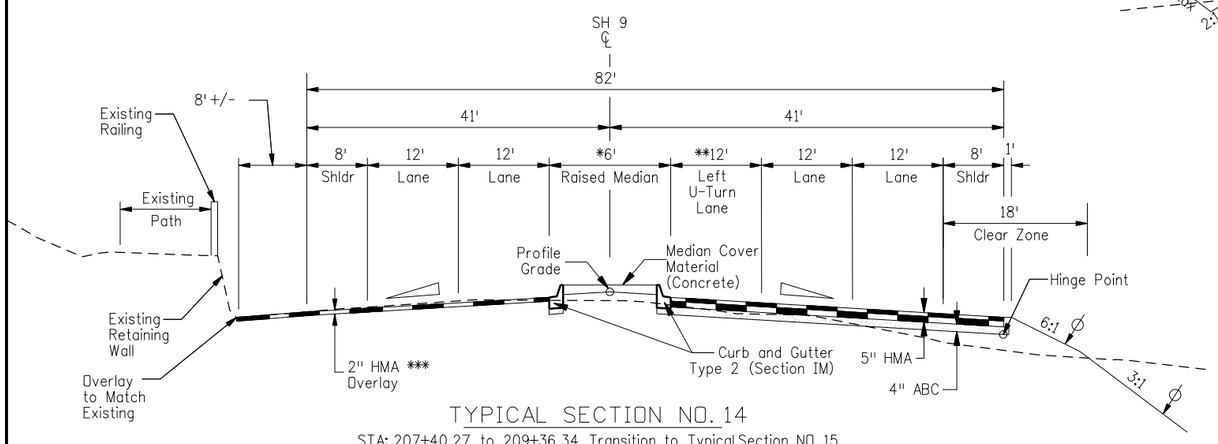


### TYPICAL SECTION NO. 14

STA: 207+40.27 to 209+36.34 Transition to Typical Section NO. 15

* Transition Raised Median From 18' to 6' Between Sta: 207+40.27 to 209+19.18
** Transition Left U-Turn Lane From 0' to 12' Between Sta: 207+40.27 to 209+19.18
*** Full Depth Reconstruction Begins at 206+50.00

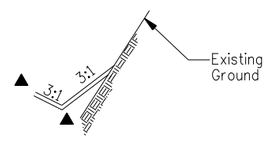


### TYPICAL DITCH TREATMENT

See Cross Sections for Ditch Locations and Ditch Invert Elevations

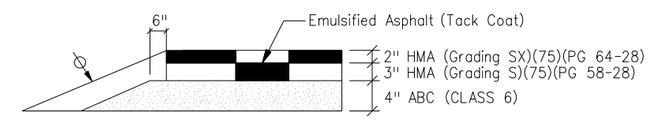


### SH-9 - FLEXIBLE PAVEMENT SECTION FULL DEPTH RECONSTRUCTION

| | | | |
|---|---|---|---|
| Print Date: 1/26/2009 | Sheet Revisions | Colorado Department of Transportation | As Constructed |
| File Name: Tiger to Agape-Typicals.dgn | Date: / Comments / Init. | DOT — Mountain Residency P.O. Box 399, Dumont, CO 80436, Phone: 303-512-5750 FAX: 303-512-5775 | No Revisions: |
| Horiz. Scale: 1:20 Vert. Scale: As Noted | R-X | Region 1 DCW | Revised: |
| Unit Information Unit Leader Initials | | | Void: |

| | | |
|---|---|---|
| SH 9 TYPICAL SECTIONS | | Project No./Code |
| Designer: TJT | Structure Numbers | STA 0091-035 |
| Detailer: TJT | | 16439 |
| Sheet Subset: TYPICALS | Subset Sheets: 5 OF 7 | Sheet Number 7 |

21698 8:35:36 AM S:\Tranproj\246220-05\14927\Consultants\Plot_Sets\SHELF\Tiger to Agape-Typicals.dgn

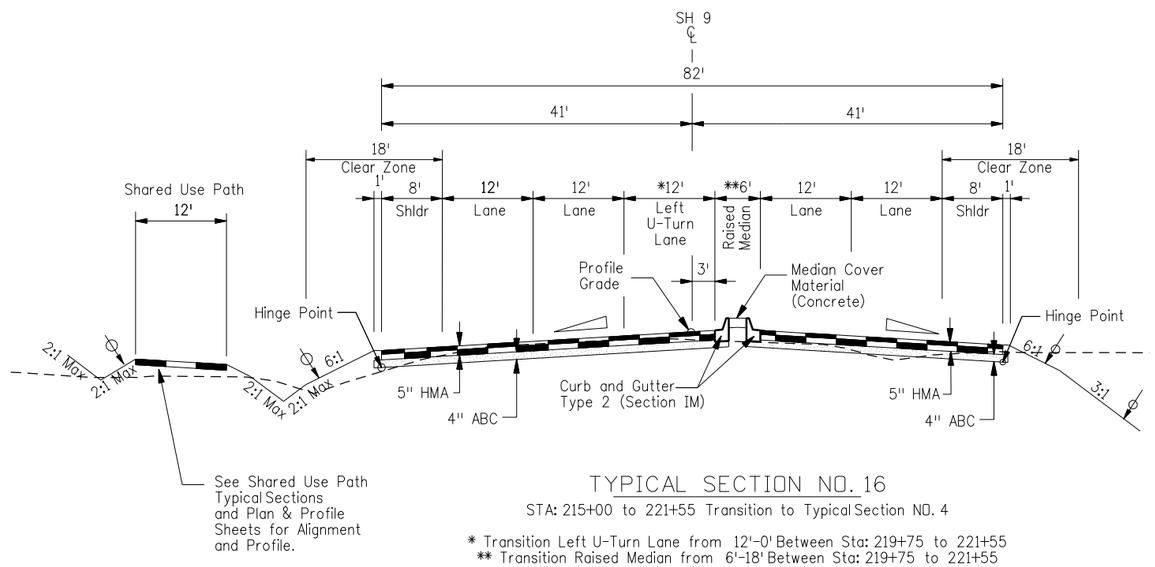


## TYPICAL SECTION NO. 16

STA: 215+00 to 221+55 Transition to Typical Section NO. 4

* Transition Left U-Turn Lane from 12'-0' Between Sta: 219+75 to 221+55
** Transition Raised Median from 6'-18' Between Sta: 219+75 to 221+55

## TYPICAL SECTION NOTES

The contractor will be required to apply soil conditioners along this line after completion of paving operations.

Break points in slopes and in bottom of ditches shall be rounded during construction for a pleasing appearance.

2% roadway slope (Typical). For specific cross slopes, see roadway profiles and cross section sheets.

Vertical alignment points.

The gradient and width of roadway ditches, and excavation and embankment slope rates may be adjusted by the engineer to assure adequate drainage and slope stability. All adjustments shall be coordinated with the engineer prior to implementation.

See Removal Plans for limits of pavement removal and sawcut lines.

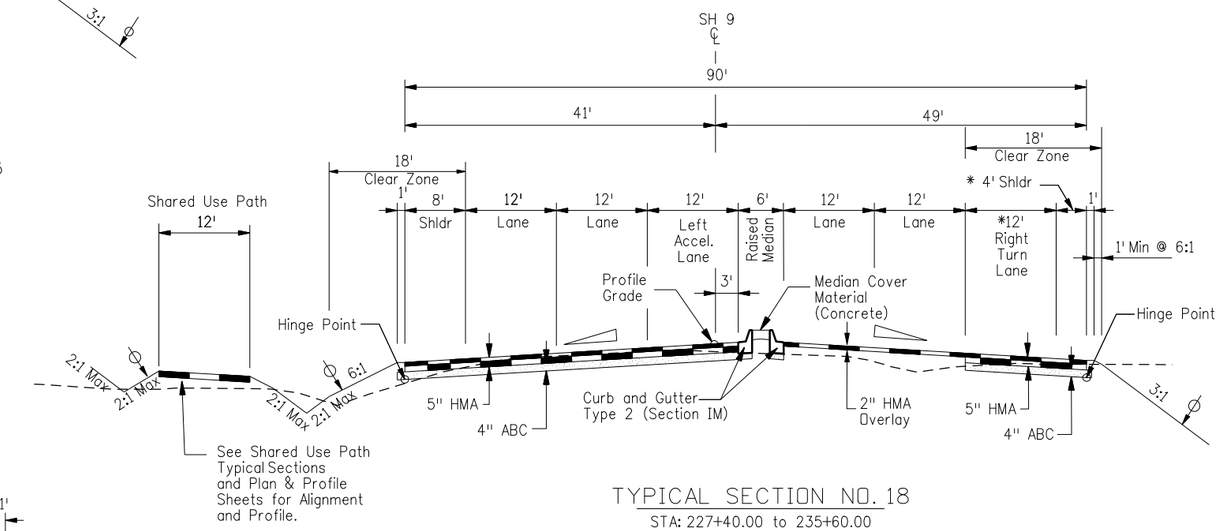


## TYPICAL SECTION NO. 18

STA: 227+40.00 to 235+60.00

*Transition Right Turn Lane From 0'-12' and Right Shoulder from 8'-4' Between Sta: 228+45 to 230+25

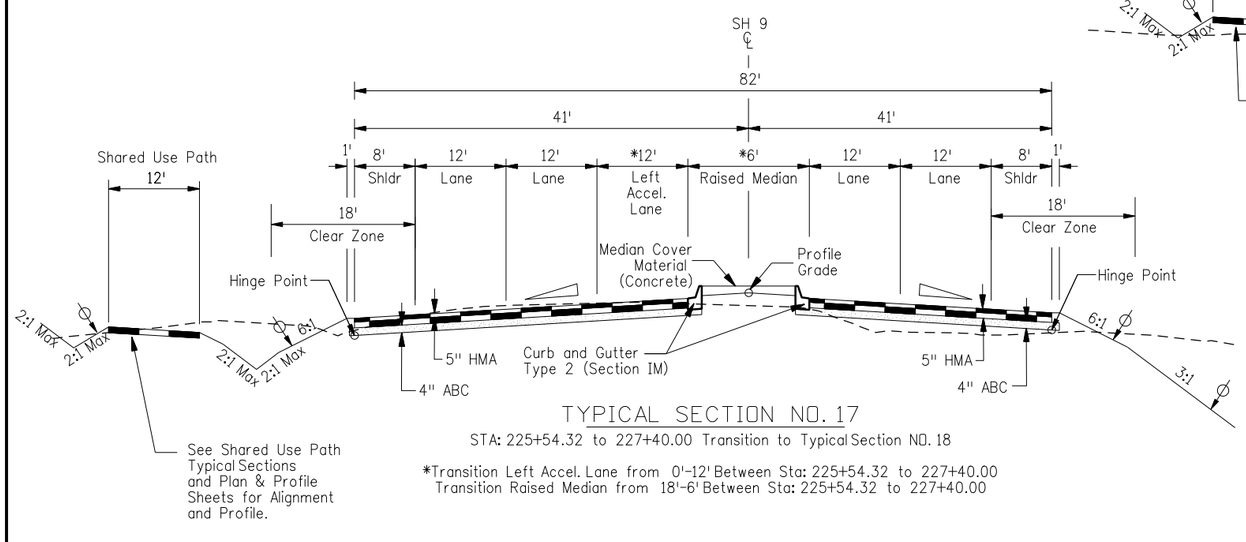


## TYPICAL SECTION NO. 17

STA: 225+54.32 to 227+40.00 Transition to Typical Section NO. 18

*Transition Left Accel. Lane from 0'-12' Between Sta: 225+54.32 to 227+40.00
Transition Raised Median from 18'-6' Between Sta: 225+54.32 to 227+40.00

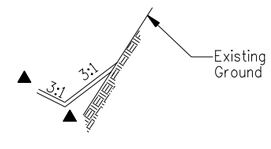


## TYPICAL DITCH TREATMENT

See Cross Sections for Ditch Locations
and Ditch Invert Elevations

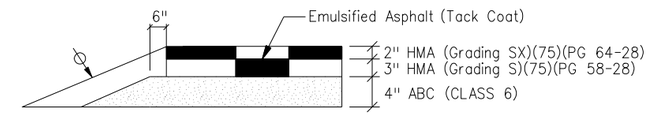


## SH-9 - FLEXIBLE PAVEMENT SECTION FULL DEPTH RECONSTRUCTION

| | | | | | |
|---|---|---|---|---|---|
| Print Date: 1/26/2009 | Sheet Revisions | Colorado Department of Transportation | As Constructed | SH 9 TYPICAL SECTIONS | Project No./Code |
| File Name: Tiger to Agape-Typicals.dgn | Date: / Comments / Init. | Mountain Residency P.O. Box 399 Dumont, CO 80436 Phone: 303-512-5750 FAX: 303-512-5775 | No Revisions: | Designer: TJT / Structure Numbers | STA 0091-035 |
| Horiz. Scale: 1:20 Vert. Scale: As Noted | R-X | Region 1 DCW | Revised: | Detailer: TJT | 16439 |
| Unit Information Unit Leader Initials | | | Void: | Sheet Subset: TYPICALS / Subset Sheets: 6 OF 7 | Sheet Number 8 |

21698 8:35:49 AM S:\Tranproj\246220-05\14927\Consultants\Plot_Sets\SHELF\Tiger to Agape-Typicals.dgn

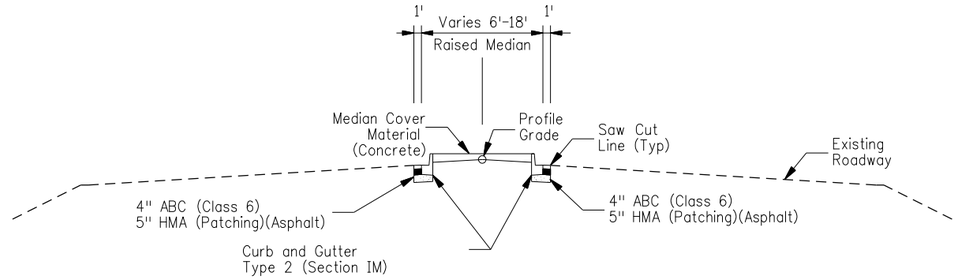


## TYPICAL SECTION NO. 19

STA: 235+28.84 to 243+51.00

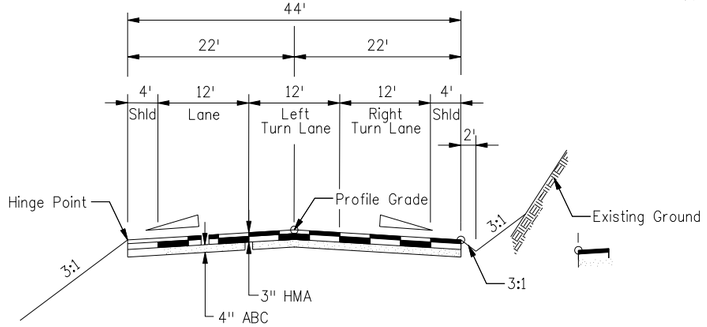


## TYPICAL SECTION NO. 20

REVETTE DRIVE
STA 662+49.00 to STA 663+09.69 (RECONSTRUCT)
REVETTE DRIVE

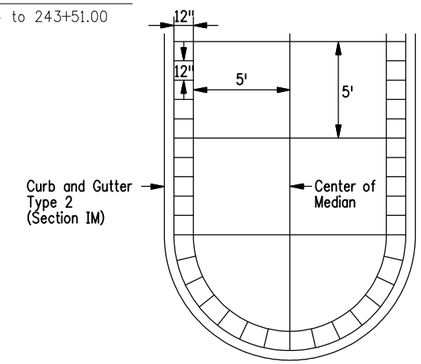


NOTE:
All Median Cover Material (Concrete) shall be 4 inches thick (minimum).

## MEDIAN COVER MATERIAL (CONCRETE) DETAIL

All median cover material color shall be Federal Standard 595B Color No. 30340 (dark cocoa brown).

## TYPICAL SECTION NOTES

- The contractor will be required to apply soil conditioners along this line after completion of paving operations.
- Break points in slopes and in bottom of ditches shall be rounded during construction for a pleasing appearance.
- 2% roadway slope (Typical). For specific cross slopes, see roadway profiles and cross section sheets.
- Vertical alignment points.

The gradient and width of roadway ditches, and excavation and embankment slope rates may be adjusted by the engineer to assure adequate drainage and slope stability. All adjustments shall be coordinated with the engineer prior to implementation.

See Removal Plans for limits of pavement removal and sawcut lines.

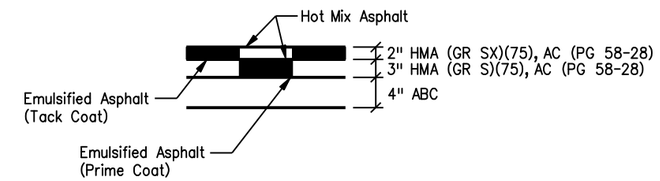


## FLEXIBLE PAVEMENT SECTION

REVETTE DRIVE, GATEWAY DRIVE

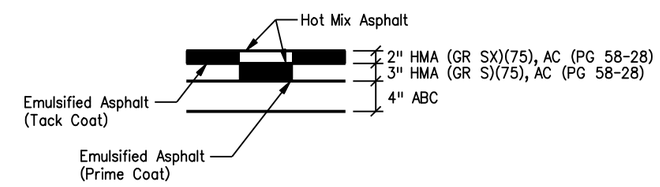


## FLEXIBLE PAVEMENT SECTION

RESIDENTIAL AND FIELD ACCESSES

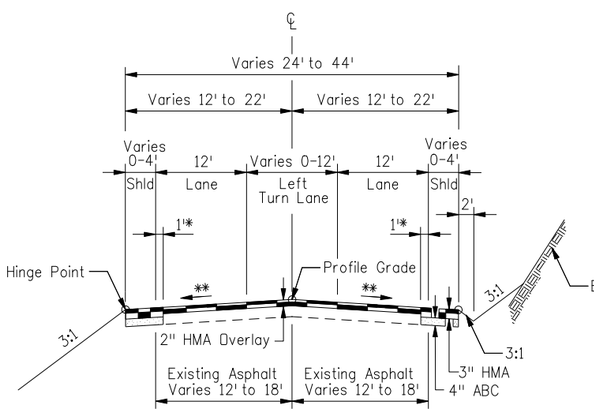


## TYPICAL SECTION NO. 21

REVETTE DRIVE
STA 663+09.69 to STA 666+13.78 (WIDEN AND OVERLAY)

* Sawcut from Existing E.O.P
** Match Existing Cross Slope

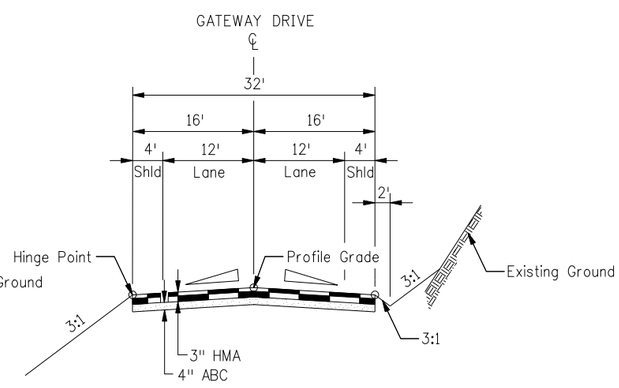


## TYPICAL SECTION NO. 22

GATEWAY DRIVE
SH 9 STA 175+36

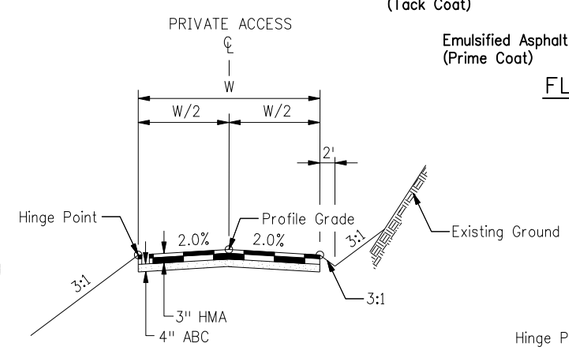


## TYPICAL SECTION NO. 23

| ACCESS | WIDTH (W) |
|---|---|
| SH 9 STA 181+74 | 7.5' |
| SH 9 STA 193+00 | 16' |
| SH 9 STA 209+12 | 12' |
| SH 9 STA 216+83 | 12' |
| SH 9 STA 225+90 | 16' |
| SH 9 STA 235+02 | 23.5' |
| | 16' |

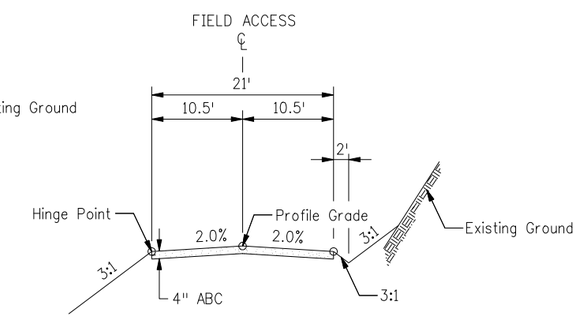


## TYPICAL SECTION NO. 24

FIELD ACCESS
SH 9 STA 216+65

| | | | | |
|---|---|---|---|---|
| Print Date: 1/26/2009 | Sheet Revisions | Colorado Department of Transportation | As Constructed | SH 9 TYPICAL SECTIONS | Project No./Code |
| File Name: Tiger to Agape-Typicals.dgn | Date: / Comments / Init. | DOT Mountain Residency P.O. Box 399 Dumont, CO 80436 Phone: 303-512-5750 FAX: 303-512-5775 | No Revisions: | | STA 0091-035 |
| Horiz. Scale: 1:20 Vert. Scale: As Noted | R-X | Region 1 DCW | Revised: | Designer: TJT / Structure Numbers | 16439 |
| Unit Information Unit Leader Initials | | | Void: | Detailer: TJT | |
| | | | | Sheet Subset: TYPICALS / Subset Sheets: 7 OF 7 | Sheet Number 9 |

21698 8:36:02 AM S:\Tranproj\246220-05\14927\Consultants\Plot_Sets\SHELF\Tiger to Agape-Typicals.dgn

# GENERAL NOTES

1. ANY LAYER OF BITUMINOUS PAVEMENT THAT IS TO HAVE A SUCCEEDING LAYER PLACED THEREON SHALL BE COMPLETED FULL WIDTH BEFORE THE TOP LAYER IS PLACED.

2. FOR PLAN QUANTITIES, THE FOLLOWING RATES OF APPLICATION WERE USED:

   EMULSIFIED ASPHALT (CSS-1H) PRIME COAT AT 0.30 GAL/SY (DILUTED)

   EMULSIFIED ASPHALT (CSS-1H) TACK COAT AT 0.10 GAL/SY (DILUTED)

   HOT MIX ASPHALT AT 110 LBS/SY/INCH OF THICKNESS

3. DILUTED EMULSIFIED ASPHALT FOR TACK COAT AND PRIME COAT SHALL CONSIST OF 1 PART EMULSIFIED ASPHALT AND 1 PART WATER. RATES OF APPLICATION SHALL BE AS DETERMINED BY THE ENGINEER AT THE TIME OF APPLICATION.

4. THE INCENTIVE/DISINCENTIVE FOR PAVEMENT SMOOTHNESS WILL BE HRI CATEGORY 1.

5. A TACK COAT IS REQUIRED PRIOR TO THE PLACEMENT OF SUBSEQUENT LIFTS OF HMA AND ON THE VERTICAL CURBS AND CUT HMA.

6. BEFORE PLACEMENT OF THE TACK COAT, THE CONTRACTOR SHALL CLEAN THE ROADWAY AS DIRECTED. CLEANING SHALL NOT BE PAID FOR SEPARATELY BUT SHALL BE INCLUDED IN THE WORK.

7. THE CONTRACTOR SHALL SCHEDULE WORK SUCH THAT NEW HMA IS COMPLETED FULL WIDTH (CURB TO CURB, SHOULDER TO SHOULDER) AT THE END OF EACH WEEK WHILE PAVING IS TAKING PLACE. NO UNEVEN LONGITUDINAL JOINTS ARE TO BE LEFT FOR WEEKEND TRAFFIC UNLESS APPROVED BY THE ENGINEER.

8. THE ENGINEER MAY DIRECT THE USE OF ASPHALT MILLINGS AND REMOVED ASPHALT IN THE EMBANKMENT AT SPECIFIC LOCATIONS. EXISTING ASPHALT AND CONCRETE PAVEMENT SHALL BE REMOVED IN THOSE AREAS DESIGNATED IN THE PLANS OR DESIGNATED BY THE ENGINEER.

9. WHERE NEW ASPHALT PAVEMENT IS TO ABUT EXISTING PAVEMENT, THE EXISTING PAVEMENT SHALL BE SAWCUT TO A NEAT VERTICAL LINE WITH A CONCRETE PAVEMENT SAW OR OTHER METHOD AS APPROVED BY THE ENGINEER. SAWCUTTING SHALL NOT BE MEASURED AND PAID FOR SEPARATELY, BUT SHALL BE INCLUDED IN THE WORK. VERTICAL EDGES ARE NOT TO REMAIN OVERNIGHT. REMOVED PAVEMENT NOT USED IN EMBANKMENT AREAS SHALL BECOME THE PROPERTY OF THE CONTRACTOR AND SHALL BE DISPOSED OF OFF-SITE. WHERE EXISTING BITUMINOUS PAVEMENT IS SAWCUT, THE SAWCUT VERTICAL EDGE SHALL BE PAINTED WITH EMULSIFIED ASPHALT (CSS-1H). THE RATE OF APPLICATIONS SHALL BE DETERMINED BY THE ENGINEER AT THE TIME OF APPLICATION.

10. THE CONTRACTOR SHALL LIMIT CONSTRUCTION ACTIVITIES TO THOSE AREAS WITHIN THE LIMITS OF RIGHT OF WAY AND CONSTRUCTION EASEMENTS PER THE RIGHT-OF-WAY PLANS PROVIDED TO THE CONTRACTOR. CONTRACTOR SHALL INDEMNIFY AND HOLD CDOT SAFE AND HARMLESS FROM ANY CLAIMS OR DAMAGES ARISING FROM THE CONTRACTOR'S USE OF PROPERTY OUTSIDE THE LIMITS OF RIGHT-OF-WAY AND CONSTRUCTION EASEMENTS. FOR THE PURPOSES OF THIS PROVISION, WITHIN THE TEMPORARY EASEMENT AREAS, PERMISSIBLE CONSTRUCTION ACTIVITIES SHALL SPECIFICALLY EXCLUDE USE FOR STAGING AREAS OR OVERNIGHT PARKING OF CONSTRUCTION VEHICLES.

11. DEPTH OF MOISTURE AND DENSITY CONTROL FOR THIS PROJECT SHALL BE AS FOLLOWS:

    FULL DEPTH OF EMBANKMENTS

    BASES OF CUTS AND FILLS ~ 0.5 FT DEPTH

    EXCAVATION REQUIRED FOR COMPACTION OF BASES OF CUTS AND FILLS SHALL BE CONSIDERED AS INCIDENTAL TO THAT OPERATION AND WILL NOT BE PAID FOR SEPARATELY.

12. TYPE OF COMPACTION FOR THIS PROJECT WILL BE AASHTO T-180.

13. SHOULDERING OPERATIONS SHALL BE COMPLETED AS SOON AS POSSIBLE AFTER THE NEW PAVEMENT IS LAID. THE CONTRACTOR SHALL COORDINATE HIS GRADING OPERATION TO ENSURE THAT DESIGNED SLOPES ARE IN PLACE NEXT TO NEW PAVEMENT PRIOR TO OPENING THE PAVEMENT TO NORMAL TRAFFIC OPERATIONS.

14. FULL COMPLIANCE PAVEMENT MARKINGS AND ROADSIDE DELINEATION SHALL BE IN PLACE AT THE END OF EACH WORKING DAY UNLESS OTHERWISE APPROVED BY THE ENGINEER.

15. IF ANY SOIL CONTAMINATION IS SUSPECTED WHILE EXCAVATING, IMMEDIATELY CONTACT THE ENGINEER.

16. THE CONTRACTOR SHALL NOT STOCKPILE MATERIAL WITHIN 20 FEET OF THE EDGE OF TRAVELED WAY. UNLESS APPROVED BY THE ENGINEER.

17. THE CONTRACTOR SHALL SUBMIT A PLAN ADDRESSING LOCAL DRAINAGE DURING EACH PHASE OF CONSTRUCTION TO THE ENGINEER FOR REVIEW. THIS SHALL NOT BE PAID FOR SEPARATELY BUT SHALL BE INCLUDED IN THE WORK.

18. CONTROL OF SURFACE RUNOFF AND REPAIR OF DAMAGES RESULTING FROM RUNOFF IS SOLELY THE RESPONSIBILITY OF THE CONTRACTOR AND SHALL BE INCLUDED IN THE COST OF THE WORK.

19. UNLESS OTHERWISE NOTED, ALL REMOVED MATERIALS WILL BECOME THE PROPERTY OF THE CONTRACTOR AND SHALL BE REMOVED FROM THE SITE.

20. THE CONTRACTOR SHALL MAINTAIN TRAFFIC ON A PAVED SURFACE AT ALL TIMES UNLESS OTHERWISE APPROVED BY THE ENGINEER.

21. FIELD FACILITIES ACCESS AREAS SHALL BE PROVIDED WITH AN ALL-WEATHER SURFACE AS APPROVED BY THE ENGINEER. THE COST FOR THIS WILL BE INCLUDED IN THE WORK AND NOT PAID FOR SEPARATELY.

22. THE CONTRACTOR SHALL COORDINATE THE RESETTING OF SURVEY MONUMENTS WHICH REQUIRE RELOCATION DUE TO CONSTRUCTION. THE CONTRACTOR SHALL PROTECT ALL OTHER EXISTING SURVEY MONUMENTS DURING CONSTRUCTION OPERATIONS. ANY MONUMENTS, NOT IDENTIFIED FOR RESETTING, THAT ARE DISTURBED BY THE CONTRACTOR SHALL BE RESET AT THE CONTRACTORS EXPENSE. IT IS ESTIMATED THAT 6 EACH SURVEY MONUMENT (TYPE 2) WILL BE REQUIRED FOR THE PROJECT.

23. IT IS ESTIMATED A NUMBER OF CDOT CONTROL MONUMENTS, CDOT RIGHT-OF-WAY MONUMENT, PROPERTY PINS ACCEPTED AS CDOT RIGHT-OF-WAY, AND CDOT PERMANENT EASEMENT MARKERS WILL BE DESTROYED BY CONSTRUCTION ACTIVITIES . SEE RIGHT-OF-WAY PLANS SH 9 VALLEY BROOK TO SWAN MTN. RD. STA 0091-024 PHASE I AND PHASE III AND THE LAND SURVEY CONTROL DIAGRAM INCLUDED IN THE PLANS. IT WILL BE THE CONTRACTOR'S RESPONSIBILITY TO REPORT IN WRITING TO THE PROJECT ENGINEER AND THE REGION ONE SURVEY MANAGER OR HIS DESIGNEE ALL SURVEY MONUMENTS DISTURBED OR DESTROYED.

24. THE CONTRACTOR SHALL MAINTAIN PEDESTRIAN AND VEHICLE ACCESS TO PROPERTY OWNERS AND BUSINESSES AND ACCESS TO ALL ROADS AT ALL TIMES DURING CONSTRUCTION AS APPROVED BY THE ENGINEER.

25. ALL SWEEPING OPERATIONS SHALL BE DONE BY A PICK-UP TYPE BROOM AND SHALL NOT BE PAID FOR SEPARATELY BUT SHALL BE INCLUDED IN THE WORK.

26. THE CONTRACTOR SHALL PROTECT ALL EXISTING UTILITIES DURING CONSTRUCTION AND IS RESPONSIBLE FOR ANY DAMAGE THERETO.

27. THE CONTRACTOR SHALL ANTICIPATE BOULDERS WHEN EXCAVATING AND GRADING. SOME BOULDERS WILL BE USED AS LANDSCAPING; REMOVE OR SET AS NECESSARY. REMOVING BOULDERS OFF PROJECT LIMITS WILL NOT BE PAID SEPARATELY, BUT SHALL BE INCLUDED IN THE WORK. EXCESS BOULDERS SHALL BECOME PROPERTY OF THE CONTRACTOR.

28. UTILITY INFORMATION SHOWN ON THE PLANS ARE PLOTTED FROM THE BEST AVAILABLE INFORMATION. THE CONTRACTOR WILL CALL THE UTILITY NOTIFICATION CENTER OF COLORADO (UNCC) AT LEAST 4 WORKING DAYS PRIOR TO ANY EXCAVATION. SEE UTILITY GENERAL NOTES.

29. DUST PALLIATIVE AND WATER SHALL NOT BE PAID FOR SEPARATELY, BUT SHALL BE INCLUDED IN THE WORK.

30. EXISTING PAVEMENT SECTION VARIES. ASPHALT THICKNESS VARIES BETWEEN 6-10 INCHES. AGGREGATE BASE COURSE THICKNESS VARIES BETWEEN 4-6 INCHES.

31. IT IS ESTIMATED THAT 1 LUMP SUM FOR CLEARING AND GRUBBING (ITEM 201) WILL BE REQUIRED FOR THE PROJECT. CLEARING AND GRUBBING IS ESTIMATED AT APPROXIMATELY 20 ACRES. ALL TREES LOCATED WITHIN THE CLEAR ZONE DISTANCE FROM THE ROADWAYS AND SHARED USE PATHS AND NOT OTHERWISE PROTECTED SHALL BE REMOVED AS PART OF CLEARING AND GRUBBING.

32. IT IS ESTIMATED THAT 8 HOURS OF DOZING (80-140 HORSEPOWER WILL BE REQUIRED TO OBLITERATE THE EAST SIDE PATH NO LONGER IN USE THAT IS OUTSIDE GRADING LIMITS SHOWN ON THE PLANS. GRADING SHALL BE SHAPED TO MATCH EXISTING TERRAIN.

33. IT IS ESTIMATED THAT 1,000 LINEAR FEET OF FENCE (PLASTIC) (ITEM 607) WILL BE REQUIRED FOR THE PROJECT TO PROTECT MISCELLANEOUS ITEMS DURING CONSTRUCTION AS DIRECTED BY THE ENGINEER. FENCE SHALL BE RESET AS DIRECTED BY THE ENGINEER. NO ADDITIONAL PAYMENT SHALL BE MADE TO RESET FENCE.

34. IT IS ESTIMATED THAT 1 EACH FIELD OFFICE (CLASS 2) (ITEM 620) WILL BE REQUIRED FOR THE PROJECT.

35. IT IS ESTIMATED THAT 1 EACH FIELD LABORATORY (CLASS 2) (ITEM 620) WILL BE REQUIRED FOR THE PROJECT.

36. IT IS ESTIMATED THAT 1 EACH SANITARY FACILITY (ITEM 620) WILL BE REQUIRED

37. IT IS ESTIMATED THAT 1 LUMP SUM FOR CONSTRUCTION SURVEYING (ITEM 625) WILL BE REQUIRED FOR THE PROJECT.

38. IT IS ESTIMATED THAT 1 LUMP SUM FOR MOBILIZATION (ITEM 626) WILL BE REQUIRED FOR THE PROJECT. IT IS ANTICIPATED THAT MORE THAN ONE MOBILIZATION WILL BE REQUIRED FOR MULTIPLE ACTIVITIES.

39. IT IS ESTIMATED THAT 40 HOURS OF CONSTRUCTION SURVEYING (HOURLY) (ITEM 625) OF SPECIAL STAKING SURVEYING (2 MEN) WILL BE REQUIRED AS DIRECTED BY THE ENGINEER. THIS IS SEPARATE FROM THE LUMP SUM SURVEYING WHICH IS DETAILED IN THE SURVEY TABULATION.

40. IT IS ESTIMATED THAT 1 LUMP SUM FOR PUBLIC INFORMATION SERVICES (ITEM 626) WILL BE REQUIRED FOR THE PROJECT AS DEFINED IN THE PROJECT SPECIAL PROVISIONS.

41. REMOVAL OF EXISTING DELINEATORS WILL NOT BE MEASURED AND PAID FOR, BUT SHALL BE INCLUDED IN THE WORK.

42. IT IS ESTIMATED THAT THE FOLLOWING NUMBER OF DELINEATORS WILL BE REQUIRED. (ITEM 612)
    DELINEATOR (FLEXIBLE) (TYPE I) 59 EACH
    DELINEATOR (FLEXIBLE) (TYPE II) 131 EACH
    DELINEATOR (FLEXIBLE) (TYPE III) 18 EACH
    FOR INFORMATION ONLY: 187 WHITE CRYSTALS AND 251 YELLOW CRYSTALS
    IT IS ESTIMATED THAT APPROXIMATELY 375 DELINEATORES WILL BE REMOVED.
    THIS SHALL NOT BE PAID FOR SEPERATELY, BUT INCLUDED IN THE WORK.

43. THE CONTRACTOR SHALL PROTECT THE EXISTING STREAM GAUGE BUILDING AND PIPES. THEY SHALL SUBMIT A PROTECTION PLAN TO THE ENGINEER FOR APPROVAL. THIS WILL NOT BE PAID FOR SEPARATELY BUT WILL BE INCLUDED IN THE WORK.

44. REMOVED SIGNS WILL BE THE PROPERTY OF THE CONTRACTOR.

## WETLAND INFORMATION

ALL WETLANDS WITHIN PROJECT AREA HAVE NOT BEEN MAPPED. ONLY WETLANDS THAT WERE POTENTIALLY IMPACTED AT THE TIME OF DESIGN WERE MAPPED. IF CONSTRUCTION LIMITS VARY FROM THOSE LIMITS AS SHOWN ON THE PLANS, AS DETERMINED BY THE ENGINEER, CONTACT CDOT ENVIRONMENTAL FOR ADDITIONAL POTENTIAL WETLAND MAPPING.

## STAKING INFORMATION

ALL STATIONS, OFFSETS, AND ELEVATIONS FOR CURB AND GUTTER ARE AT THE LIP OF PAN OR THE EDGE OF THE ROADWAY.

# SUMMARY OF APPROXIMATE QUANTITIES

| INDEX | | | CONTRACT | CONTRACT ITEM | UNIT | ROADWAY | | BRIDGE F-12-BW | | | | | | | | TOTALS | |
|---|---|---|---|---|---|---|---|---|---|---|---|---|---|---|---|---|---|
| BOOK | PAGE | SHEET | ITEM NO. | | | PLAN | AS CONST. | PLAN | AS CONST. | | | | | | | PLAN | AS CONST. |
| | | | 201-00000 | CLEARING AND GRUBBING | LS | 1 | | | | | | | | | | 1 | |
| | | | 202-00002 | REMOVAL OF STRUCTURE (SPECIAL) | EA | | | 1 | | | | | | | | 1 | |
| | | | 202-00033 | REMOVAL OF PIPE | EA | 10 | | | | | | | | | | 10 | |
| | | | 202-00190 | REMOVAL OF CONCRETE MEDIAN COVER MATERIAL | SY | 1,028 | | | | | | | | | | 1,028 | |
| | | | 202-00203 | REMOVAL OF CURB AND GUTTER | LF | 2,321 | | | | | | | | | | 2,321 | |
| | | | 202-00220 | REMOVAL OF ASPHALT MAT | SY | 51,992 | | | | | | | | | | 51,992 | |
| | | | 202-00240 | REMOVAL OF ASPHALT MAT (PLANING) | SY | 415 | | | | | | | | | | 415 | |
| | | | 202-00250 | REMOVAL OF PAVEMENT MARKING | SF | 13,500 | | | | | | | | | | 13,500 | |
| | | | 202-00425 | REMOVAL OF BRIDGE RAILING | LF | 76 | | | | | | | | | | 76 | |
| | | | 202-00700 | REMOVAL OF LIGHT STANDARD | EA | 8 | | | | | | | | | | 8 | |
| | | | 202-00805 | REMOVAL OF OVERHEAD SIGN STRUCTURE | EA | 1 | | | | | | | | | | 1 | |
| | | | 202-00810 | REMOVAL OF GROUND SIGN | EA | 62 | | | | | | | | | | 62 | |
| | | | 202-00821 | REMOVAL OF SIGN PANEL | EA | 16 | | | | | | | | | | 16 | |
| | | | 202-00828 | REMOVAL OF TRAFFIC SIGNAL EQUIPMENT | LS | 1 | | | | | | | | | | 1 | |
| | | | 202-01130 | REMOVAL OF GUARDRAIL TYPE 3 | LF | 531 | | | | | | | | | | 531 | |
| | | | 202-01300 | REMOVAL OF END ANCHORAGE | EA | 6 | | | | | | | | | | 6 | |
| | | | 203-00060 | EMBANKMENT MATERIAL (COMPLETE IN PLACE) | CY | 38,210 | | | | | | | | | | 38,210 | |
| | | | 203-01550 | DOZING | HR | 8 | | | | | | | | | | 8 | |
| | | | 203-01594 | COMBINATION LOADER | HR | 40 | | | | | | | | | | 40 | |
| | | | 203-02330 | LABORER | HR | 40 | | | | | | | | | | 40 | |
| | | | 206-00000 | STRUCTURE EXCAVATION | CY | 268 | | 268 | | | | | | | | 536 | |
| | | | 206-00065 | STRUCTURE BACKFILL (FLOW-FILL) | CY | | | 106 | | | | | | | | 106 | |
| | | | 206-00100 | STRUCTURE BACKFILL (CLASS 1) | CY | | | 623 | | | | | | | | 623 | |
| | | | 206-00200 | STRUCTURE BACKFILL (CLASS 2) | CY | | | 165 | | | | | | | | 165 | |
| | | | 206-00360 | MECHANICAL REINFORCEMENT OF SOIL | CY | | | 623 | | | | | | | | 623 | |
| | | | 206-01001 | BED COURSE MATERIAL (SPECIAL) | CY | 397 | | | | | | | | | | 397 | |
| | | | 206-01750 | SHORING | LS | | | 1 | | | | | | | | 1 | |
| | | | 207-00205 | TOPSOIL | CY | 24 | | | | | | | | | | 24 | |
| | | | 208-00002 | EROSION LOGS (12 INCH) | LF | 8,225 | | | | | | | | | | 8,225 | |
| | | | 208-00011 | EROSION BALES (WEED FREE) | EA | 162 | | | | | | | | | | 162 | |
| | | | 208-00045 | CONCRETE WASHOUT STRUCTURE | EA | 2 | | | | | | | | | | 2 | |
| | | | 208-00052 | STORM DRAIN INLET PROTECTION (TYPE 2) | LF | 80 | | | | | | | | | | 80 | |
| | | | 208-00070 | STABILIZED CONSTRUCTION ENTRANCE | EA | 2 | | | | | | | | | | 2 | |

# SUMMARY OF APPROXIMATE QUANTITIES

| INDEX | | | CONTRACT | CONTRACT ITEM | UNIT | ROADWAY | | BRIDGE F-12-BW | | | | | | | | TOTALS | |
|---|---|---|---|---|---|---|---|---|---|---|---|---|---|---|---|---|---|
| BOOK | PAGE | SHEET | ITEM NO. | | | PLAN | AS CONST. | PLAN | AS CONST. | | | | | | | PLAN | AS CONST. |
| | | | 208-00100 | SEDIMENT REMOVAL AND DISPOSAL | LS | 1 | | | | | | | | | | 1 | |
| | | | 208-00206 | EROSION CONTROL SUPERVISOR | DAY | 170 | | | | | | | | | | 170 | |
| | | | 210-00001 | RESET STRUCTURE | EA | 3 | | | | | | | | | | 3 | |
| | | | 210-00010 | RESET MAILBOX STRUCTURE | EA | 7 | | | | | | | | | | 7 | |
| | | | 210-00050 | RESET FIRE HYDRANT | EA | 3 | | | | | | | | | | 3 | |
| | | | 210-00809 | RESET BLANKOUT SIGN | EA | 2 | | | | | | | | | | 2 | |
| | | | 210-00815 | RESET SIGN PANEL | EA | 8 | | | | | | | | | | 8 | |
| | | | 210-01000 | RESET FENCE | LF | 1,844 | | | | | | | | | | 1,844 | |
| | | | 210-01011 | RESET GATE | EA | 2 | | | | | | | | | | 2 | |
| | | | 210-01130 | RESET GUARDRAIL TYPE 3 | LF | 246 | | | | | | | | | | 246 | |
| | | | 210-04000 | ADJUST STRUCTURE | EA | 1 | | | | | | | | | | 1 | |
| | | | 210-04010 | ADJUST MANHOLE | EA | 14 | | | | | | | | | | 14 | |
| | | | 210-04050 | ADJUST VALVE BOX | EA | 8 | | | | | | | | | | 8 | |
| | | | 212-00006 | SEEDING (NATIVE) | ACRE | 24 | | | | | | | | | | 24 | |
| | | | 212-00032 | SOIL CONDITIONING | ACRE | 16 | | | | | | | | | | 16 | |
| | | | 213-00002 | MULCHING (WEED FREE HAY) | ACRE | 24 | | | | | | | | | | 24 | |
| | | | 213-00061 | MULCH TACKIFIER | LB | 4,800 | | | | | | | | | | 4,800 | |
| | | | 213-00705 | LANDSCAPE BOULDER (SPECIAL) | EA | 11 | | | | | | | | | | 11 | |
| | | | 214-01010 | BRUSH LAYER CUTTING | EA | 100 | | | | | | | | | | 100 | |
| | | | 216-00035 | SOIL RETENTION BLANKET (PLASTIC) | SY | 1,131 | | | | | | | | | | 1,131 | |
| | | | 217-00020 | HERBICIDE TREATMENT | HR | 16 | | | | | | | | | | 16 | |
| | | | 304-06007 | AGGREGATE BASE COURSE (SPECIAL) | CY | 8,978 | | | | | | | | | | 8,978 | |
| | | | 403-00720 | HOT MIX ASPHALT (PATCHING) (ASPHALT) | TON | 151 | | | | | | | | | | 151 | |
| | | | 403-02000 | HOT MIX ASPHALT (SPECIAL) | TON | 934 | | | | | | | | | | 934 | |
| | | | 403-33721 | HOT MIX ASPHALT (GRADING S) (75) (PG 58-28) | TON | 14,324 | | | | | | | | | | 14,324 | |
| | | | 403-34731 | HOT MIX ASPHALT (GRADING SX) (75) (PG 58-34) | TON | 13,088 | | | | | | | | | | 13,088 | |
| | | | 403-34751 | HOT MIX ASPHALT (GRADING SX) (75) (PG 64-28) | TON | 13,088 | | | | | | | | | | 13,088 | |
| | | | 411-10253 | EMULSIFIED ASPHALT (CSS-1H) | GAL | 4,820 | | | | | | | | | | 4,820 | |
| | | | 420-00100 | GEOTEXTILE (EROSION CONTROL) (CLASS A) | SY | 164 | | | | | | | | | | 164 | |
| | | | 502-00460 | PILE TIP | EA | | | 24 | | | | | | | | 24 | |
| | | | 502-02000 | DYNAMIC LOAD TESTING | LS | 1 | | | | | | | | | | 1 | |
| | | | 502-11489 | STEEL PILING (HP 14x89) | LF | | | 974 | | | | | | | | 974 | |



PBSJ 4601 DTC Boulevard, Suite 700 Denver, CO 80237 Phone: (303) 221-7275 Fax: (303) 221-7276


Sheet Revisions

| Date: | Comments | Init. |
|---|---|---|
| | | |
| | | |
| | | |
| | | |


Colorado Department of Transportation
Mountain Residency P.O. Box 399
Dumont, CO 80436
Phone: 303-512-5750 FAX: 303-512-5775
Region 1 DCW


As Constructed
No Revisions:
Revised:
Void:

SUMMARY OF APPROXIMATE QUANTITIES

Designer: SLZ
Detailer: SLZ
Sheet Subset: TAB
Structure Numbers
Subset Sheets: 2 of 5

Project No./Code
STA 0091-035
16439
Sheet Number 12


21698 8:38:46 AM S:\Tranproj\246220-05\14927\Consultants\Plot_Sets\SHELF\16439SummaryofQuantities02.dgn

# SUMMARY OF APPROXIMATE QUANTITIES

| INDEX | | | CONTRACT | CONTRACT ITEM | UNIT | ROADWAY | | BRIDGE F-12-BW | | | | | | | | TOTALS | |
|---|---|---|---|---|---|---|---|---|---|---|---|---|---|---|---|---|---|
| BOOK | PAGE | SHEET | ITEM NO. | | | PLAN | AS CONST. | PLAN | AS CONST. | | | | | | | PLAN | AS CONST. |
| | | | 503-00036 | DRILLED CAISSON (36 INCH) | LF | 30 | | | | | | | | | | 30 | |
| | | | 503-00054 | DRILLED CAISSON (54 INCH) | LF | 42 | | | | | | | | | | 42 | |
| | | | 506-00209 | RIPRAP (9 INCH) | CY | 128 | | | | | | | | | | 128 | |
| | | | 506-00218 | RIPRAP (18 INCH) | CY | 289 | | | | | | | | | | 289 | |
| | | | 507-00400 | BITUMINOUS SLOPE AND DITCH PAVING (ASPHALT) | TON | 9 | | | | | | | | | | 9 | |
| | | | 515-00120 | WATERPROOFING (MEMBRANE) | SY | | | 751 | | | | | | | | 751 | |
| | | | 601-01000 | CONCRETE CLASS B | CY | 4 | | | | | | | | | | 4 | |
| | | | 601-03040 | CONCRETE CLASS D (BRIDGE) | CY | | | 381 | | | | | | | | 381 | |
| | | | 601-40401 | STRUCTURAL CONCRETE STAIN | SY | | | 402 | | | | | | | | 402 | |
| | | | 602-00020 | REINFORCING STEEL (EPOXY COATED) | LB | | | 93,770 | | | | | | | | 93,770 | |
| | | | 603-01180 | 18 INCH REINFORCED CONCRETE PIPE | LF | 549 | | | | | | | | | | 549 | |
| | | | 603-01240 | 24 INCH REINFORCED CONCRETE PIPE | LF | 329 | | | | | | | | | | 329 | |
| | | | 603-01420 | 42 INCH REINFORCED CONCRETE PIPE | LF | 107 | | | | | | | | | | 107 | |
| | | | 603-05018 | 18 INCH REINFORCED CONCRETE END SECTION | EA | 12 | | | | | | | | | | 12 | |
| | | | 603-05024 | 24 INCH REINFORCED CONCRETE END SECTION | EA | 5 | | | | | | | | | | 5 | |
| | | | 603-05042 | 42 INCH REINFORCED CONCRETE END SECTION | EA | 2 | | | | | | | | | | 2 | |
| | | | 604-00305 | INLET TYPE C (5 FOOT) | EA | 5 | | | | | | | | | | 5 | |
| | | | 604-00310 | INLET TYPE C (10 FOOT) | EA | 2 | | | | | | | | | | 2 | |
| | | | 604-16005 | INLET TYPE 16 (5 FOOT) | EA | 3 | | | | | | | | | | 3 | |
| | | | 604-16010 | INLET TYPE 16 (10 FOOT) | EA | 1 | | | | | | | | | | 1 | |
| | | | 606-00301 | GUARDRAIL TYPE 3 (6-3 POST SPACING) | LF | 635 | | | | | | | | | | 635 | |
| | | | 606-00710 | GUARDRAIL TYPE 7 (STYLE CA) | LF | 70 | | | | | | | | | | 70 | |
| | | | 606-10700 | BRIDGE RAIL TYPE 7 | LF | 203 | | | | | | | | | | 203 | |
| | | | 606-01340 | TRANSITION TYPE 3D | EA | 1 | | | | | | | | | | 1 | |
| | | | 606-02005 | END ANCHORAGE (FLARED) | EA | 2 | | | | | | | | | | 2 | |
| | | | 607-11525 | FENCE (PLASTIC) | LF | 3,500 | | | | | | | | | | 3,500 | |
| | | | 609-21011 | CURB AND GUTTER TYPE 2 (SECTION I-M) | LF | 14,599 | | | | | | | | | | 14,599 | |
| | | | 609-40011 | CURB TYPE 4 (SECTION M) | LF | 84 | | 164 | | | | | | | | 248 | |
| | | | 610-00030 | MEDIAN COVER MATERIAL (CONCRETE) | SF | 307 | | 30,963 | | | | | | | | 31,270 | |
| | | | 612-00041 | DELINEATOR (FLEXIBLE) (TYPE I) | EA | 59 | | | | | | | | | | 59 | |
| | | | 612-00042 | DELINEATOR (FLEXIBLE) (TYPE II) | EA | 131 | | | | | | | | | | 131 | |
| | | | 612-00043 | DELINEATOR (FLEXIBLE) (TYPE III) | EA | 18 | | | | | | | | | | 18 | |
| | | | 613-00200 | 2 INCH ELECTRICAL CONDUIT | LF | 1,055 | | 207 | | | | | | | | 1,262 | |



PBSJ 4601 DTC Boulevard, Suite 700 Denver, CO 80237 Phone: (303) 221-7275 Fax: (303) 221-7276


Sheet Revisions

| Date: | Comments | Init. |
|---|---|---|
| | | |
| | | |
| | | |
| | | |


Colorado Department of Transportation
Mountain Residency P.O. Box 399
Dumont, CO 80436
Phone: 303-512-5750 FAX: 303-512-5775
Region 1 DCW


As Constructed
No Revisions:
Revised:
Void:

SUMMARY OF APPROXIMATE QUANTITIES

Designer: SLZ
Detailer: SLZ
Sheet Subset: TAB
Structure Numbers
Subset Sheets: 3 of 5

Project No./Code
STA 0091-035
16439
Sheet Number 13


21698 8:39:03 AM S:\Tranproj\246220-05\14927\Consultants\Plot_Sets\SHELF\16439SummaryofQuantities03.dgn

# SUMMARY OF APPROXIMATE QUANTITIES

| INDEX BOOK | INDEX PAGE | INDEX SHEET | CONTRACT ITEM NO. | CONTRACT ITEM | UNIT | ROADWAY PLAN | ROADWAY AS CONST. | BRIDGE F-12-BW PLAN | BRIDGE F-12-BW AS CONST. | | | | | | | TOTALS PLAN | TOTALS AS CONST. |
|---|---|---|---|---|---|---|---|---|---|---|---|---|---|---|---|---|---|
| | | | 613-00300 | 3 INCH ELECTRICAL CONDUIT | LF | 12,420 | | 414 | | | | | | | | 12,834 | |
| | | | 613-10000 | WIRING | LS | 1 | | | | | | | | | | 1 | |
| | | | 613-70400 | LUMINAIRE HIGH PRESSURE SODIUM (400 WATT) | EA | 4 | | | | | | | | | | 4 | |
| | | | 614-00011 | SIGN PANEL (CLASS I) | SF | 385 | | | | | | | | | | 385 | |
| | | | 614-00012 | SIGN PANEL (CLASS II) | SF | 204 | | | | | | | | | | 204 | |
| | | | 614-01512 | STEEL SIGN SUPPORT (2 INCH ROUND) (POST) | LF | 432 | | | | | | | | | | 432 | |
| | | | 614-01522 | STEEL SIGN SUPPORT (2 INCH ROUND) (SOCKET) | EA | 40 | | | | | | | | | | 40 | |
| | | | 614-01575 | STEEL SIGN SUPPORT (2-1/2 INCH ROUND NP-40) (POST) | LF | 230 | | | | | | | | | | 230 | |
| | | | 614-01578 | STEEL SIGN SUPPORT (2-1/2 INCH ROUND NP-40) (SLIPBASE) | EA | 23 | | | | | | | | | | 23 | |
| | | | 614-70150 | PEDESTRIAN SIGNAL FACE (16) (COUNTDOWN) | EA | 6 | | | | | | | | | | 6 | |
| | | | 614-70336 | TRAFFIC SIGNAL FACE (12-12-12) | EA | 10 | | | | | | | | | | 10 | |
| | | | 614-70560 | TRAFFIC SIGNAL FACE (12-12-12-12-12) | EA | 8 | | | | | | | | | | 8 | |
| | | | 614-72860 | PEDESTRIAN PUSH BUTTON | EA | 6 | | | | | | | | | | 6 | |
| | | | 614-72875 | LOOP DETECTOR WIRE | LF | 5,600 | | | | | | | | | | 5,600 | |
| | | | 614-73005 | PIEZO ELECTRIC TUBE, CLASS 2 | EA | 4 | | | | | | | | | | 4 | |
| | | | 614-80000 | FLASHING BEACON | EA | 2 | | | | | | | | | | 2 | |
| | | | 614-81140 | TRAFFIC SIGNAL-LIGHT POLE STEEL (1-40 FOOT MAST ARM) | EA | 1 | | | | | | | | | | 1 | |
| | | | 614-81145 | TRAFFIC SIGNAL-LIGHT POLE STEEL (1-45 FOOT MAST ARM) | EA | 1 | | | | | | | | | | 1 | |
| | | | 614-81175 | TRAFFIC SIGNAL-LIGHT POLE STEEL (1-75 FOOT MAST ARM) | EA | 2 | | | | | | | | | | 2 | |
| | | | 614-86245 | CONTROLLER (TYPE 170E) | EA | 1 | | | | | | | | | | 1 | |
| | | | 615-00050 | EMBANKMENT PROTECTOR TYPE 5 | EA | 2 | | | | | | | | | | 2 | |
| | | | 618-00142 | PRESTRESSED CONCRETE I (BT42) | LF | | | 728 | | | | | | | | 728 | |
| | | | 620-00002 | FIELD OFFICE (CLASS 2) | EA | 1 | | | | | | | | | | 1 | |
| | | | 620-00012 | FIELD LABORATORY (CLASS 2) | EA | 1 | | | | | | | | | | 1 | |
| | | | 620-00020 | SANITARY FACILITY | EA | 1 | | | | | | | | | | 1 | |
| | | | 621-00450 | DETOUR PAVEMENT | SY | 595 | | | | | | | | | | 595 | |
| | | | 625-00000 | CONSTRUCTION SURVEYING | LS | 1 | | | | | | | | | | 1 | |
| | | | 625-00001 | CONSTRUCTION SURVEYING (HOURLY) | HR | 40 | | | | | | | | | | 40 | |
| | | | 626-00000 | MOBILIZATION | LS | 1 | | | | | | | | | | 1 | |
| | | | 626-01000 | PUBLIC INFORMATION SERVICES | LS | 1 | | | | | | | | | | 1 | |
| | | | 627-00005 | EPOXY PAVEMENT MARKING | GAL | 260 | | | | | | | | | | 260 | |
| | | | 627-00012 | PAVEMENT MARKING PAINT (LOW VOC SOLVENT BASE) | GAL | 270 | | | | | | | | | | 270 | |

# SUMMARY OF APPROXIMATE QUANTITIES

| INDEX | | | CONTRACT | CONTRACT ITEM | UNIT | ROADWAY | | BRIDGE F-12-BW | | | | | | | | TOTALS | |
|---|---|---|---|---|---|---|---|---|---|---|---|---|---|---|---|---|---|
| BOOK | PAGE | SHEET | ITEM NO. | | | PLAN | AS CONST. | PLAN | AS CONST. | | | | | | | PLAN | AS CONST. |
| | | | 627-30405 | PREFORMED THERMOPLASTIC PAVEMENT MARKING (WORD-SYMBOL) | SF | 551 | | | | | | | | | | 551 | |
| | | | 627-30410 | PREFORMED THERMOPLASTIC PAVEMENT MARKING (XWALK-STOP LINE) | SF | 1,762 | | | | | | | | | | 1,762 | |
| | | | 629-01002 | SURVEY MONUMENT (TYPE 2) | EA | 6 | | | | | | | | | | 6 | |
| | | | 630-00000 | FLAGGING | HR | 5,000 | | | | | | | | | | 5,000 | |
| | | | 630-00007 | TRAFFIC CONTROL INSPECTION | DAY | 100 | | | | | | | | | | 100 | |
| | | | 630-00012 | TRAFFIC CONTROL MANAGEMENT | DAY | 170 | | | | | | | | | | 170 | |
| | | | 630-80335 | BARRICADE (TYPE 3 M-A) (TEMP) | EA | 4 | | | | | | | | | | 4 | |
| | | | 630-80341 | CONSTRUCTION TRAFFIC SIGN (PANEL SIZE A) | EA | 30 | | | | | | | | | | 30 | |
| | | | 630-80342 | CONSTRUCTION TRAFFIC SIGN (PANEL SIZE B) | EA | 108 | | | | | | | | | | 108 | |
| | | | 630-80343 | CONSTRUCTION TRAFFIC SIGN (PANEL SIZE C) | EA | 12 | | | | | | | | | | 12 | |
| | | | 630-80355 | PORTABLE MESSAGE SIGN PANEL | EA | 2 | | | | | | | | | | 2 | |
| | | | 630-80356 | ADVANCE WARNING FLASHING OR SEQUENCING ARROW PANEL (A TYPE) | EA | 2 | | | | | | | | | | 2 | |
| | | | 630-80360 | DRUM CHANNELIZING DEVICE | EA | 500 | | | | | | | | | | 500 | |
| | | | 630-80363 | DRUM CHANNELIZING DEVICE (WITH LIGHT) (FLASHING) | EA | 50 | | | | | | | | | | 50 | |
| | | | 630-80370 | CONCRETE BARRIER (TEMPORARY) | LF | 1,000 | | | | | | | | | | 1,000 | |
| | | | 630-80380 | TRAFFIC CONE | EA | 300 | | | | | | | | | | 300 | |
| | | | 630-85006 | IMPACT ATTENUATOR (SAND FILLED PLASTIC BARREL) (TEMPORARY) | EA | 2 | | | | | | | | | | 2 | |
| | | | 700-70010 | F/A MINOR CONTRACT REVISIONS | FA | 1 | | | | | | | | | | 1 | |
| | | | 700-70011 | F/A PARTNERING | FA | 1 | | | | | | | | | | 1 | |
| | | | 700-70012 | F/A ASPHALT PAVEMENT INCENTIVE | FA | 1 | | | | | | | | | | 1 | |
| | | | 700-70016 | F/A FUEL COST ADJUSTMENT | FA | 1 | | | | | | | | | | 1 | |
| | | | 700-70019 | F/A ASPHALT CEMENT COST ADJUSTMENT | FA | 1 | | | | | | | | | | 1 | |
| | | | 700-70023 | F/A ON-THE-JOB TRAINEE | FA | 1 | | | | | | | | | | 1 | |
| | | | 700-70025 | F/A QUALITY INCENTIVE PAYMENT | FA | 1 | | | | | | | | | | 1 | |
| | | | 700-70028 | F/A ESB PROGRAM | FA | 1 | | | | | | | | | | 1 | |
| | | | 700-70035 | F/A UTILITIES | FA | 1 | | | | | | | | | | 1 | |
| | | | 700-70380 | F/A EROSION CONTROL | FA | 1 | | | | | | | | | | 1 | |
| | | | 700-73351 | F/A THIRD PARTY FORCE ACCOUNT | FA | 1 | | | | | | | | | | 1 | |

# EARTHWORK TABULATION

| EARTHWORK TABULATION (FOR INFORMATION ONLY) | |
|---|---|
| **EMBANKMENT MATERIAL (COMPLETE IN PLACE)(NET)** | **CUBIC YARDS** |
| ROADWAY: | |
| FROM ROADWAY CROSS SECTIONS STA 134+25 TO 235+60 | 34,079 |
| WEST, EAST TIGER ROAD (15 CY, 44 CY) | 59 |
| STA 162+47 - REVETTE DRIVE | 69 |
| STA 175+36 - GATEWAY DRIVE | 833 |
| STA 181+74 - FISHERMAN PARKING ACCESS | 24 |
| STA 193+00 - PRIVATE ACCESS | 1,151 |
| STA 209+09 - PRIVATE ACCESS | 13 |
| STA 209+12 - PRIVATE ACCESS | 947 |
| STA 216+65 - PRIVATE ACCESS (FIELD) | 74 |
| STA 216+83 - PRIVATE ACCESS | 12 |
| STA 225+90 - PRIVATE ACCESS | 25 |
| STA 235+01 - AGAPE CHURCH DRIVES | 17 |
| PONDS: | |
| STA 159+50 (SE OF REVETTE DR.) | 66 |
| STA 164+00 (SW OF BRIDGE) | 461 |
| STA 190+00 | 41 |
| SHARED USE PATH: | |
| STA 6000+00 (TIGER ROAD) | 6 |
| GATEWAY DRIVE | 0 |
| STA 7000+00 (NORTH OF GOLD HILL) | 41 |
| STRUCTURE CROSS SECTIONS: | 268 |
| WETLAND: | 24 |
| **TOTAL:** | 38,210 |
| **UNCLASSIFIED EXCAVATION** | **CUBIC YARDS** |
| ROADWAY: | |
| FROM ROADWAY CROSS SECTIONS STA 134+25 TO 235+60 | 6,767 |
| WEST, EAST TIGER ROAD (267 CY, 175 CY) | 442 |
| STA 162+47 - REVETTE DRIVE | 174 |
| STA 175+36 - GATEWAY DRIVE | 1,194 |
| STA 181+74 - FISHERMAN PARKING ACCESS | 52 |
| STA 193+00 - PRIVATE ACCESS | 275 |
| STA 209+09 - PRIVATE ACCESS | 9 |
| STA 209+12 - PRIVATE ACCESS | 12 |
| STA 216+65 - PRIVATE ACCESS (FIELD) | 6 |
| STA 216+83 - PRIVATE ACCESS | 20 |
| STA 225+90 - PRIVATE ACCESS | 15 |
| STA 235+01 - AGAPE CHURCH DRIVES | 169 |
| PONDS: | |
| STA 159+50 (SE OF REVETTE DR.) | 303 |
| STA 164+00 (SW OF BRIDGE) | 142 |
| STA 190+00 | 918 |
| SHARED USE PATH: | |
| STA 6000+00 (TIGER ROAD) | 362 |
| GATEWAY DRIVE | 173 |
| STA 7000+00 (NORTH OF GOLD HILL) | 1,181 |
| **TOTAL:** | 12,214 |
| **EARTHWORK QUANTITIES BALANCE** | |
| **UNCLASSIFIED EXCAVATION** | **CUBIC YARDS** |
| TOTAL UNCLASSIFIED EXCAVATION **(SEE NOTE 3)** | 12,214 |
| TOTAL FROM CONTRACTOR'S SOURCE | 25,996 |
| **EMBANKMENT (NET) TIMES COMPACTION FACTOR (1.00)** | |
| **TOTAL:** | **38,210** |
| **COMPACTION (AASHTO T 180)** | **CUBIC YARDS** |
| TOTAL EMBANKMENT (NET) | 38,210 |
| BASES OF CUTS AND FILLS (6 INCHES x 93745 SY) | 15,624 |
| TOTAL: | 53,834 |

NOTES
1. CONTRACTOR IS RESPONSIBLE TO DETERMINE APPROPRIATE SHRINK/SWELL FACTORS.
2. MINIMUM R VALUE FOR EMBANKMENT MATERIAL SHALL BE 65 IN TOP TWO FEET.
3. MAY NOT BE USABLE AS ROADWAY FILL.

# SUMMARY OF EARTHWORK

| PAY QUANTITY | 203-00060 (CY) |
|---|---|
| EMBANKMENT MATERIAL (COMPLETE-IN-PLACE) | |
| EARTHWORK BALANCE FROM TABULATION | 38,210 |

# MISCELLANEOUS TABULATION

| ITEM NO. | ITEM | UNIT | PLAN TOTAL QUANTITY | PLAN SECTION | | | | | | |
|---|---|---|---|---|---|---|---|---|---|---|
| | | | | GENERAL NOTES | STRUCTURE | UTILITY | BRIDGE | SWMP | WETLAND | TIGER ROAD SIGNAL |
| 206-00000 | STRUCTURE EXCAVATION | CY | 536 | | 268 | | 268 | | | |
| 607-11525 | FENCE (PLASTIC) | LF | 3,500 | 1,000 | | | | 1,900 | 600 | |
| 613-00200 | 2 INCH ELECTRICAL CONDUIT | LF | 647 | | | | 207 | | | 440 |
| 613-00300 | 3 INCH ELECTRICAL CONDUIT | LF | 13,199 | | | 10,600 | 414 | | | 2,185 |
| 614-72875 | LOOP DETECTOR WIRE | LF | 5,600 | | | 950 | | | | 4,650 |

# PAVEMENT DESIGN PARAMETERS

| **Flexible Pavement:** | **SH 9** |
|---|---|
| 20 Year 18 kip ESALs | 1,243,580 |
| Reliability, % | 95 |
| Initial Serviceability | 4.5 |
| Terminal Serviceability | 2.5 |
| Overall Deviation | 0.44 |
| Minimum R-Value | 65 |
| Resilient Modulus, M(R), (psi) | 21,500 |
| HMA Structural Coefficient | 0.44 |
| ABC Class 6 Structural Coefficient | 0.12 |
| 20 Years Design Structural Number (SN) | 2.51 |
| Minimum ABC Thickness Required (in) | 4.0 in |
| Minimum HMA Thickness Required (in) | 4.61 |
| Recommended HMA Thickness (in) | 4.75 in |

# TABULATION OF REMOVALS, RESETS, AND ADJUSTMENTS

| LOCATION | SIDE | 202-00033 REMOVAL OF PIPE | 202-00190 REMOVAL OF CONCRETE MEDIAN COVER MATERIAL | 202-00203 REMOVAL OF CURB AND GUTTER | 202-00220 REMOVAL OF ASPHALT MAT | 202-00240 REMOVAL OF ASPHALT MAT (PLANING) | 202-00700 REMOVAL OF LIGHT STANDARD | 210-00050 RESET FIRE HYDRANT | 210-01000 RESET FENCE | 210-01010 RESET GATE POST | 210-01011 RESET GATE | 210-04000 ADJUST STRUCTURE | 210-04010 ADJUST MANHOLE | 210-04050 ADJUST VALVE BOX | REMARKS |
|---|---|---|---|---|---|---|---|---|---|---|---|---|---|---|---|
| | | EA | SY | LF | SY | SY | EA | EA | LF | EA | EA | EA | EA | EA | |
| STA 131+25.00 TO 140+00.00 | LT | | | | 814 | 182 | | | | | | | | | |
| STA 131+25.00 TO 140+00.00 | RT | | | | 1,044 | | | | | | | | | | |
| STA 131+25.00 TO 140+00.00 | CENTER | | | | 627 | | | | | | | | | | |
| STA 132+00 | LT | 1 | | | | | | | | | | | | | |
| STA 135+45.90 | LT | | | | 10 | | | | | | | | 1 | | REMOVAL OF PIEZO LOOPS |
| STA 139+98.66 TO 143+45.20 | LT | | | | 353 | | | | | | | | | | SHARED USE PATH |
| STA 140+05.17 | LT | | | | | | | | | | | | 1 | | |
| STA 140+00.00 TO 142+50.00 | CENTER | | | | 3,428 | | | | | | | | | | TIGER ROAD INTERSECTION |
| STA 142+50.00 TO 153+20.00 | LT | | | | 563 | | | | | | | | | | |
| STA 142+50.00 TO 153+20.00 | RT | | | | 1,177 | | | | | | | | | | |
| STA 142+50.00 TO 153+20.00 | CENTER | | | | 1,238 | | | | | | | | | | |
| STA 148+00 | LT | 1 | | | | | | | | | | | | | |
| STA 153+20.00 TO 157+50.00 | LT / RT | | | | 2,917 | | | | | | | | | | |
| STA 157+50 | LT | 1 | | | | | | | | | | | | | |
| STA 157+50.00 TO 162+00.37 | LT | | | | 498 | | | | | | | | | | |
| STA 157+50.00 TO 162+00.37 | RT | | | | 370 | | | | | | | | | | |
| STA 157+50.00 TO 162+00.37 | CENTER | | | | 766 | | | | | | | | | | |
| STA 161+88 | RT | | | | | | 1 | | | | | | | | |
| STA 162+00.37 TO 163+10.85 | CENTER | | | | 1,489 | 51 | | | | | | | | | REVETTE DRIVE INTERSECTION |
| STA 162+22.65 | RT | | | | | | | 1 | | | | | | | |
| STA 162+27 | RT | | | | | | | | | | | | | 3 | |
| STA 162+50 | RT | 1 | | | | | | | | | | | | | |
| STA 162+93 | LT | | | | | | 1 | | | | | | | | |
| STA 163+10.85 TO 172+98.92 | CENTER | | | | 7,544 | | | | | | | | | | |
| STA 163+14.06 TO 173+00.88 | CENTER | | 826 | 1,981 | | | | | | | | | | | EXISTING MEDIAN AT BLUE RIVER |
| STA 164+66 | RT | | | | | | 1 | | | | | | | | |
| STA 166+47 | LT | | | | | | 1 | | | | | | | | |
| STA 167+82 | RT | | | | | | 1 | | | | | | | | |
| STA 169+97 | LT | | | | | | 1 | | | | | | | | |
| STA 171+74 | RT | | | | | | 1 | | | | | | | | |
| STA 172+98.92 TO 173+91.03 | CENTER | | | | 1,129 | | | | | | | | | | GATEWAY DRIVE INTERSECTION |
| STA 173+00 | CENTER | 1 | | | | | | | | | | | | | |
| STA 173+10 | LT | | | | | | 1 | | | | | | | | |
| STA 173+42.56 TO 176+01.41 | LT | | | | 300 | | | | | | | | | | SHARED USE PATH |
| STA 173+91.03 TO 191+75.00 | CENTER | | | | 9,948 | | | | | | | | | | |
| STA 174+00.61 | RT | | | | | | | 1 | | | | | | | |
| STA 174+00.67 | RT | | | | | | | | | | | | | 1 | |
| STA 174+51.67 | RT | | | | | | | | | | | 1 | | | PRV VALVE |
| STA 174+94.42 | RT | | | | | | | | | | | | 1 | | |
| STA 179+33.13 | LT | | | | | | | | | | | | 1 | | |
| STA 183+91.30 | RT | | | | | | | | | | | | 1 | | |
| STA 185+17.16 | RT | | | | | | | | | | | | 1 | | |
| STA 185+17.45 | RT | | | | | | | | | | | | | 1 | |
| STA 189+07.81 | RT | | | | | | | | | | | | 1 | | |
| STA 191+75.00 TO 208+50.00 | RT | | | | 1,946 | | | | | | | | | | |
| **SHEET 1 TOTAL** | | **5** | **826** | **1,981** | **36,161** | **233** | **8** | **2** | **0** | **0** | **0** | **1** | **7** | **5** | |

Print Date: 1/26/2009
Drawing File Name: 16439RemovalTAB.dgn
Horiz. Scale: 1:1 Vert. Scale: As Noted
Unit Information Unit Leader Initials

R-X

Sheet Revisions

| Date: | Comments | Init. |
|---|---|---|
| | | |
| | | |
| | | |
| | | |

Colorado Department of Transportation
DOT
Mountain Residency P.O. Box 399
Dumont, CO 80436
Phone: 303-512-5750 FAX: 303-512-5775
Region 1 DCW

As Constructed
No Revisions:
Revised:
Void:

TABULATION OF REMOVALS

Designer: TJT
Detailer: TJT
Sheet Subset: TAB
Structure Numbers
Subset Sheets: 2 of 9

Project No./Code
STA 0091-035
16439
Sheet Number 17

# TABULATION OF REMOVALS, RESETS, AND ADJUSTMENTS

| LOCATION | SIDE | 202-00033 REMOVAL OF PIPE | 202-00190 REMOVAL OF CONCRETE MEDIAN COVER MATERIAL | 202-00203 REMOVAL OF CURB AND GUTTER | 202-00220 REMOVAL OF ASPHALT MAT | 202-00240 REMOVAL OF ASPHALT MAT (PLANING) | 202-00700 REMOVAL OF LIGHT STANDARD | 210-00050 RESET FIRE HYDRANT | 210-01000 RESET FENCE | 210-01010 RESET GATE POST | 210-01011 RESET GATE | 210-04000 ADJUST STRUCTURE | 210-04010 ADJUST MANHOLE | 210-04050 ADJUST VALVE BOX | REMARKS |
|---|---|---|---|---|---|---|---|---|---|---|---|---|---|---|---|
| | | EA | SY | LF | SY | SY | EA | EA | LF | EA | EA | EA | EA | EA | |
| STA 195+25 | RT | 1 | | | | | | | | | | | | | |
| STA 198+00 | CENTER | 1 | | | | | | | | | | | | | |
| STA 201+28.98 | RT | | | | | | | | | | | | 1 | | |
| STA 201+61.92 TO 207+63.10 | RT | | | | | | | | 729 | 2 | | | | | GATE POSTS ARE STONE PILLARS |
| STA 205+70.24 | RT | | | | | | | | | | | | 1 | | |
| STA 208+50.00 TO 227+10.63 | CENTER | | | | 9,600 | | | | | | | | | | |
| STA 208+50.00 TO 228+25.63 | LT | | | | 1,744 | | | | | | | | | | SHARED USE PATH |
| STA 209+24 | RT | | | | | | | 1 | | | | | | 1 | |
| STA 213+30 | RT | | | | | | | | | | | | | 1 | |
| STA 214+63.41 | RT | | | | | | | | | | | | 1 | | |
| STA 214+85 TO 225+48 | LT | | | | | | | | 1,115 | | 2 | | | | GATE AT FIELD ACCESS STA 216+66 LT |
| STA 216+60 | LT | 1 | | | | | | | | | | | | | |
| STA 219+05.60 | RT | | | | | | | | | | | | 1 | | |
| STA 223+35.29 | RT | | | | | | | | | | | | 1 | | |
| STA 225+37.13 | LT | | | | | | | | | | | | | 1 | |
| STA 225+50 | CENTER | 2 | | | | | | | | | | | | | |
| STA 227+10.63 TO 235+60.00 | LT / RT | | | | 3,627 | | | | | | | | | | |
| STA 227+77.82 | RT | | | | | | | | | | | | 1 | | |
| STA 232+83.88 | RT | | | | | | | | | | | | 1 | | |
| STA 235+60.00 TO 243+51.00 | CENTER | | | | 860 | 182 | | | | | | | | | |
| STA 241+94 TO 243+50 | CENTER | | 202 | 340 | | | | | | | | | | | |
| **SHEET 2 TOTAL** | | **5** | **202** | **340** | **15,831** | **182** | **0** | **1** | **1,844** | **2** | **2** | **0** | **7** | **3** | |
| **PROJECT TOTAL:** | | **10** | **1,028** | **2,321** | **51,992** | **415** | **8** | **3** | **1,844** | **2** | **2** | **1** | **14** | **8** | |

# TABULATION OF STRUCTURES

| NOTE NO. | STATION | 206-01001 BED COURSE MATERIAL (SPECIAL) | 420-00100 GEOTEXTILE (EROSION CONTROL) (CLASS A) | 506-00209 RIPRAP (9 INCH) | 506-00218 RIPRAP (18 INCH) | 603-01180 18 INCH REINFORCED CONCRETE PIPE | 603-01240 24 INCH REINFORCED CONCRETE PIPE | 603-01420 42 INCH REINFORCED CONCRETE PIPE | 603-05018 18 INCH REINFORCED CONCRETE END SECTION | 603-05024 24 INCH REINFORCED CONCRETE END SECTION | 603-05042 42 INCH REINFORCED CONCRETE END SECTION | 604-00305 INLET TYPE C H=5 | 604-00310 INLET TYPE C H=10 | 604-16005 INLET TYPE 16 H=5 | 604-16010 INLET TYPE 16 H=10 | 507-0400 EMBANKMENT PROTECTOR ITEMS: BITUMINOUS SLOPE AND DITCH PAVING (ASPHALT) | 609-40011 EMBANKMENT PROTECTOR ITEMS: CURB TYPE 4 (SECTION M) | 615-00050 EMBANKMENT PROTECTOR ITEMS: EMBANKMENT PROTECTOR TYPE 5 | 206-00000 STRUCTURE EXCAVATION | STRUCTURE EXCAVATION* | STRUCTURE BACKFILL CL1* | 203-00060 EMBANKMENT MATERIAL (COMPLETE IN PLACE) | H, MAX DEPTH OF COVER | REMARKS |
|---|---|---|---|---|---|---|---|---|---|---|---|---|---|---|---|---|---|---|---|---|---|---|---|---|
| | | CY | SY | CY | CY | LF | LF | LF | EA | EA | EA | EA | | EA | | TON | LF | EA | CY | CY | CY | CY | FT | |
| SH 9 | | | | | | | | | | | | | | | | | | | | | | | | |
| 133.89 L | STA 133+88.88 LT | | | | | | | | | | | 1 | | | | | | | | | | | | |
| | Pipe | | | | | 51 | | | | | | | | | | | | | 3 | 33 | 25 | 3 | 1.5 | |
| 133.92 L | STA 133+92.45 LT | | 9 | 4 | | | | | 1 | | | | | | | | | | | | | | | |
| | | | | | | | | | | | | | | | | | | | | | | | | |
| 152.80 L | STA 152+80.02 LT | | | | | | | | | | | 1 | | | | | | | | | | | | |
| | Pipe | | | | | 48 | | | | | | | | | | | | | 5 | 31 | 24 | 5 | 1.6 | |
| 152.83 L | STA 152+83.36 LT | | 9 | 4 | | | | | 1 | | | | | | | | | | | | | | | |
| | | | | | | | | | | | | | | | | | | | | | | | | |
| | STA 160+00 RT | | | 12 | | | | | | | | | | | | | | | | | | | | |
| | | | | | | | | | | | | | | | | | | | | | | | | |
| 161.99 R | STA 161+99.43 RT | | | | | | | | | | | | | 1 | | | | | | | | | | |
| | Pipe | | | | | 57 | | | | | | | | | | | | | 11 | 37 | 28 | 11 | 2.4 | |
| 162.04 L | STA 162+04.00 LT | | 9 | 4 | | | | | 1 | | | | | | | | | | | | | | | |
| | | | | | | | | | | | | | | | | | | | | | | | | |
| 162.11 R | STA 162+11.33 RT | | | | | | | | 1 | | | | | | | | | | | | | | | |
| | Pipe | | | | | 69 | | | | | | | | | | | | | 5 | 45 | 37 | 5 | 1.9 | |
| 162.80 R | STA 162+80.33 RT | | 9 | 4 | | | | | 1 | | | | | | | | | | | | | | | |
| | | | | | | | | | | | | | | | | | | | | | | | | |
| | STA 165+25 LT | | | 21 | | | | | | | | | | | | | | | | | | | | |
| | | | | | | | | | | | | | | | | | | | | | | | | |
| | STA 166+71.41 LT | | | 2 | | | | | | | | | | | | 5 | 42 | 1 | | | | | | |
| | | | | | | | | | | | | | | | | | | | | | | | | |
| | STA 169+68.09 RT | | | 2 | | | | | | | | | | | | 4 | 42 | 1 | | | | | | |
| | | | | | | | | | | | | | | | | | | | | | | | | |
| 174.70 L | STA 174+70.46 LT | | | | | | | | | 1 | | | | | | | | | | | | | | |
| | Pipe | | | | | | 46 | | | | | | | | | | | | | | | | 3.0 | |
| 174.79 L | STA 174+78.74 LT | | | | | | | | | | | | | | 1 | | | | | | | | | |
| | Pipe | | | | | | 74 | | | | | | | | | | | | 28 | 90 | 69 | 28 | 3.3 | |
| 174.92 R | STA 174+91.65 RT | | 13 | 6 | | | | | | 1 | | | | | | | | | | | | | | |
| | **SHEET 1 TOTAL** | | **49** | **59** | | **225** | **120** | | **5** | **2** | | **2** | | **1** | **1** | **9** | **84** | **2** | **52** | **236** | **183** | **52** | | |

* FOR INFORMATION ONLY

Print Date: 1/26/2009
File Name: 16439TABS-STRUCTURES01.dgn
Horiz. Scale: 1:1 Vert. Scale: As Noted
Unit Information Unit Leader Initials

PBSJ 4601 DTC Boulevard, Suite 700 Denver, CO 80237 Phone: (303) 221-7275 Fax: (303) 221-7276

Sheet Revisions

| Date: | Comments | Init. |
|---|---|---|
| | | |
| | | |
| | | |
| | | |

Colorado Department of Transportation
Mountain Residency P.O. Box 399
Dumont, CO 80436
Phone: 303-512-5750 FAX: 303-512-5775
Region 1 DCW

As Constructed
No Revisions:
Revised:
Void:

TABULATION OF STRUCTURES

Designer: AJF
Detailer: SLZ
Sheet Subset: TAB
Structure Numbers
Subset Sheets: 4 of 9

Project No./Code
STA 0091-035
16439
Sheet Number 19

21698 8:42:02 AM S:\Tranproj\246220-05\14927\Consultants\Plot_Sets\SHELF\16439TABS-STRUCTURES01.dgn

# TABULATION OF STRUCTURES

| NOTE NO. | STATION | 206-01001 BED COURSE MATERIAL (SPECIAL) | 420-00100 GEOTEXTILE (EROSION CONTROL) (CLASS A) | 506-00209 RIPRAP (9 INCH) | 506-00218 RIPRAP (18 INCH) | 603-01180 18 INCH REINFORCED CONCRETE PIPE | 603-01240 24 INCH REINFORCED CONCRETE PIPE | 603-01420 42 INCH REINFORCED CONCRETE PIPE | 603-05018 18 INCH REINFORCED CONCRETE END SECTION | 603-05024 24 INCH REINFORCED CONCRETE END SECTION | 603-05042 42 INCH REINFORCED CONCRETE END SECTION | 604-00305 INLET TYPE C H=5 | 604-00310 INLET TYPE C H=10 | 604-16005 INLET TYPE 16 H=5 | 604-16010 INLET TYPE 16 H=10 | 507-0400 EMBANKMENT PROTECTOR ITEMS: BITUMINOUS SLOPE AND DITCH PAVING (ASPHALT) | 609-40011 EMBANKMENT PROTECTOR ITEMS: CURB TYPE 4 (SECTION M) | 615-00050 EMBANKMENT PROTECTOR ITEMS: EMBANKMENT PROTECTOR TYPE 5 | 206-00000 STRUCTURE EXCAVATION | STRUCTURE EXCAVATION* | STRUCTURE BACKFILL CL1* | 203-00060 EMBANKMENT MATERIAL (COMPLETE IN PLACE) | H, MAX DEPTH OF COVER | REMARKS |
|---|---|---|---|---|---|---|---|---|---|---|---|---|---|---|---|---|---|---|---|---|---|---|---|---|
| | | CY | SY | CY | CY | LF | LF | LF | EA | EA | EA | EA | | EA | | TON | LF | EA | CY | CY | CY | CY | FT | |
| 178.00 R | STA 177+99.65 RT | | | | | | | | | | | | | 1 | | | | | | | | | | |
| | Pipe | | | | | 57 | | | | | | | | | | | | | 0 | 19 | 28 | 0 | 1.8 | |
| 177.99 R | STA 177+98.87 RT | | 9 | 4 | | | | | 1 | | | | | | | | | | | | | | | |
| | | | | | | | | | | | | | | | | | | | | | | | | |
| 189.97 L | STA 189+97.43 LT | | | | | | | | | | 1 | | | | | | | | | | | | | |
| | Pipe | | | | | | | 48 | | | | | | | | | | | | | | | 3.7 | |
| 190.00 L | STA 190+00.00 | | | | | | | | | | | | 1 | | | | | | | | | | | |
| | Pipe | | | | | | | 59 | | | | | | | | | | | 44 | 174 | 102 | 44 | 6.8 | |
| 190.03 R | STA 190+02.91 RT | | 35 | 16 | | | | | | | 1 | | | | | | | | | | | | | |
| | | | | | | | | | | | | | | | | | | | | | | | | |
| | STA 190+10 RT | | | 18 | | | | | | | | | | | | | | | | | | | | |
| | | | | | | | | | | | | | | | | | | | | | | | | |
| 197.87 L | STA 197+87.47 LT | | | | | | | | | | | 1 | | | | | | | | | | | | |
| | Pipe | | | | | | 61 | | | | | | | | | | | | | | | | 5.0 | |
| 197.90 L | STA 197+90.00 | | | | | | | | | | | | 1 | | | | | | | | | | | |
| | Pipe | | | | | | 108 | | | | | | | | | | | | 150 | 129 | 98 | 150 | 13.5 | |
| 197.94 R | STA 197+94.07 RT | | 13 | 6 | | | | | | 1 | | | | | | | | | | | | | | |
| | | | | | | | | | | | | | | | | | | | | | | | | |
| 207.18 L | STA 207+18.25 LT | | | | | | | | | | | 1 | | | | | | | | | | | | |
| | Pipe | | | | | 67 | | | | | | | | | | | | | 2 | 42 | 33 | 2 | 2.8 | |
| 207.52 R | STA 207+51.60 RT | | 9 | 4 | | | | | | | | | | | | | | | | | | | | |
| | | | | | | | | | | | | | | | | | | | | | | | | |
| 216.45 L | STA 216+45.32 LT | | | | | | | | | 1 | | | | | | | | | | | | | | |
| | Pipe | | | | | | 40 | | | | | | | | | | | | 0 | 29 | 23 | 0 | 1.5 | |
| 216.85 L | STA 216+85.32 LT | | 13 | 6 | | | | | | 1 | | | | | | | | | | | | | | |
| | | | | | | | | | | | | | | | | | | | | | | | | |
| 225.41 L | STA 225+41.01 LT | | | | | | | | | | | 1 | | | | | | | | | | | | |
| | Pipe | | | | | 48 | | | | | | | | | | | | | 2 | 28 | 24 | 2 | 2.1 | |
| 225.46 L | STA 225+45.85 LT | | 9 | 4 | | | | | 1 | | | | | | | | | | | | | | | |
| | | | | | | | | | | | | | | | | | | | | | | | | |
| 225.70 R | STA 225+69.87 RT | | | | | | | | 1 | | | | | | | | | | | | | | | |
| | Pipe | | | | | 38 | | | | | | | | | | | | | 3 | 30 | 19 | 3 | 2.9 | |
| 226.08 R | STA 226+07.51 RT | | 9 | 4 | | | | | 1 | | | | | | | | | | | | | | | |
| | **SHEET 2 TOTAL** | | **97** | **61** | | **210** | **209** | **107** | **4** | **3** | **2** | **3** | **2** | **1** | | | | | **201** | **451** | **327** | **201** | | |

* FOR INFORMATION ONLY

# TABULATION OF STRUCTURES

| NOTE NO. | STATION | 206-01001 BED COURSE MATERIAL (SPECIAL) | 420-00100 GEOTEXTILE (EROSION CONTROL) (CLASS A) | 506-00209 RIPRAP (9 INCH) | 506-00218 RIPRAP (18 INCH) | 603-01180 18 INCH REINFORCED CONCRETE PIPE | 603-01240 24 INCH REINFORCED CONCRETE PIPE | 603-01420 42 INCH REINFORCED CONCRETE PIPE | 603-05018 18 INCH REINFORCED CONCRETE END SECTION | 603-05024 24 INCH REINFORCED CONCRETE END SECTION | 603-05042 42 INCH REINFORCED CONCRETE END SECTION | 604-00305 INLET TYPE C H=5 | 604-00310 INLET TYPE C H=10 | 604-16005 INLET TYPE 16 H=5 | 604-16010 INLET TYPE 16 H=10 | 507-0400 EMBANKMENT PROTECTOR ITEMS: BITUMINOUS SLOPE AND DITCH PAVING (ASPHALT) | 609-40011 EMBANKMENT PROTECTOR ITEMS: CURB TYPE 4 (SECTION M) | 615-00050 EMBANKMENT PROTECTOR ITEMS: EMBANKMENT PROTECTOR TYPE 5 | 206-00000 STRUCTURE EXCAVATION | STRUCTURE EXCAVATION* | STRUCTURE BACKFILL CL1* | 203-00060 EMBANKMENT MATERIAL (COMPLETE IN PLACE) | H, MAX DEPTH OF COVER | REMARKS |
|---|---|---|---|---|---|---|---|---|---|---|---|---|---|---|---|---|---|---|---|---|---|---|---|---|
| | | CY | SY | CY | CY | LF | LF | LF | EA | EA | EA | EA | | EA | | TON | LF | EA | CY | CY | CY | CY | FT | |
| 231.20 R | STA 231+20.27 RT | | | | | | | | | | | | | 1 | | | | | | | | | | |
| | Pipe | | | | | 48 | | | | | | | | | | | | | 6 | 32 | 23 | 6 | 2.3 | |
| 231.26 R | STA 231+26.09 RT | | 9 | 4 | | | | | 1 | | | | | | | | | | | | | | | |
| | | | | | | | | | | | | | | | | | | | | | | | | |
| 234.67 R | STA 234+66.72 RT | | | | | | | | 1 | | | | | | | | | | | | | | | |
| | Pipe | | | | | 66 | | | | | | | | | | | | | 9 | 49 | 32 | 9 | 2.4 | |
| 235.33 R | STA 235+32.80 RT | | 9 | 4 | | | | | 1 | | | | | | | | | | | | | | | |
| | | | | | | | | | | | | | | | | | | | | | | | | |
| **BLUE RIVER CHANNEL** | | | | | | | | | | | | | | | | | | | | | | | | |
| | STA 8+36 TO 9+65 RT | | | | 123 | | | | | | | | | | | | | | | | | | | |
| | | | | | | | | | | | | | | | | | | | | | | | | |
| | STA 8+52 TO 10+18 LT | | | | 166 | | | | | | | | | | | | | | | | | | | |
| | | | | | | | | | | | | | | | | | | | | | | | | |
| | 8+52 TO STA 10+18 LT/RT | 397 | | | | | | | | | | | | | | | | | | | | | | |
| **SHEET 3 TOTAL** | | **397** | **18** | **8** | **289** | **114** | | | **3** | | | | | **1** | | | | | **15** | **81** | **55** | **15** | | |
| **PROJECT TOTAL** | | **397** | **164** | **128** | **289** | **549** | **329** | **107** | **12** | **5** | **2** | **5** | **2** | **3** | **1** | **9** | **84** | **2** | **268** | **768** | **565** | **268** | | |

* FOR INFORMATION ONLY

NOTES:

1. RUBBER GASKETS CONFORMING TO STANDARD SPECIFICATION SECTION 705.03 ARE REQUIRED FOR ALL CONCRETE PIPE.

# TABULATION OF SURFACING, CURB AND GUTTER, AND MEDIAN COVER MATERIAL

| LOCATION | SIDE | 304-06007 AGGREGATE BASE COURSE (SPECIAL) 4 INCH CY | 403-00720 HOT MIX ASPHALT (PATCHING) (ASPHALT) 3 INCH TON | 403-02000 HOT MIX ASPHALT (SPECIAL) 3 INCH TON | 403-33721 HOT MIX ASPHALT (GRADING S) (75) (PG 58-28) 3 INCH BTM TON | 403-34751 HOT MIX ASPHALT (GRADING SX) (75) (PG 64-28) 2 INCH TOP TON | 411-10253 EMULSIFIED ASPHALT (CSS-1H) TACK COAT GAL | 601-01000 CONCRETE CLASS B CY | 609-21011 CURB AND GUTTER TYPE 2 (SECTION I-M) LF | 610-00030 MEDIAN COVER MATERIAL (CONCRETE) 4 INCH SF | REMARKS |
|---|---|---|---|---|---|---|---|---|---|---|---|
| **SH 9 - NORTHBOUND** | | | | | | | | | | | |
| STA 131+25.00 TO 140+00.00 | NB | 129 | 10 | | 192 | 488 | 222 | | | | |
| STA 140+00.00 TO 142+50.00 | NB | 148 | | | 219 | 146 | 66 | | | | TIGER ROAD INTERSECTION |
| TIGER ROAD EAST, NE & SE CORNERS | RT | 98 | 8 | | 137 | 92 | | 2.2 | | | INCLUDES BUS AREA, TIGER ROAD, AND PATH CONNECTIONS |
| STA 142+50.00 TO 153+19.00 | NB | 178 | 12 | | 264 | 509 | 232 | | | | |
| STA 153+19.00 TO 157+50.00 | NB | 44 | 8 | | 65 | 170 | 77 | | | | |
| STA 157+50.00 TO 162+00.00 | NB | 85 | 8 | | 126 | 217 | 99 | | | | |
| STA 162+44 (REVETTE DRIVE) | RT | 186 | | | 276 | 184 | 84 | | | | |
| STA 162+00.00 TO 163+10.85 | NB | 56 | | | 83 | 56 | 25 | | | | |
| STA 163+10.85 TO 167+77.19 | NB | 235 | | | 349 | 232 | 106 | | | | |
| STA 167+77.19 TO 168+59.81 | BRIDGE | | | | | 62.5 | | | | | QUANTITY CARRIED FORWARD FROM BRIDGE PLANS |
| STA 168+59.81 TO 174+60.36 | NB | 332 | | | 493 | 329 | 150 | | | | |
| STA 174+60.36 TO 176+01.44 | NB | 77 | | | 114 | 76 | 34 | | | | |
| STA 176+01.44 TO 191+75.00 | NB | 788 | | | 1,169 | 780 | 354 | | | | |
| STA 181+74 (FISHERMAN PARKING AREA) | RT | 11 | | 17 | | | | | | | |
| STA 191+75.00 TO 208+50.00 | NB | 754 | | | 1,119 | 746 | 339 | | | | |
| STA 193+00 (PRIVATE ACCESS) | RT | 66 | | 98 | | | | | | | |
| STA 208+50.00 TO 227+10.63 | NB | 852 | | | 1,265 | 844 | 383 | | | | |
| STA 209+07 (PRIVATE ACCESS) | RT | 46 | | 69 | | | | | | | |
| STA 216+83 (PRIVATE ACCESS) | RT | 20 | | 30 | | | | | | | |
| STA 225+90 (PRIVATE ACCESS) | RT | 26 | | 38 | | | | | | | |
| STA 227+10.63 TO 235+60.00 | NB | 142 | 16 | | 212 | 389 | 177 | | | | |
| STA 193+00 (AGAPE CHURCH ACCESS) | RT | 42 | | 62 | | | | | | | |
| **SH 9 - SOUTHBOUND** | | | | | | | | | | | |
| STA 131+25.00 TO 140+00.00 | SB | 160 | 10 | | 237 | 447 | 203 | | | | |
| STA 140+00.00 TO 142+50.00 | SB | 146 | | | 216 | 144 | 66 | | | | TIGER ROAD INTERSECTION |
| TIGER ROAD WEST, NE & SE CORNERS | LT | 96 | 15 | | 127 | 85 | | 2.2 | | | INCLUDES BUS AREA, TIGER ROAD, AND PATH CONNECTIONS |
| STA 142+50.00 TO 153+19.00 | SB | 140 | 12 | | 209 | 564 | 256 | | | | |
| STA 153+19.00 TO 157+50.00 | SB | 221 | | | 328 | 219 | 99 | | | | |
| STA 157+50.00 TO 162+00.00 | SB | 37 | 8 | | 55 | 242 | 110 | | | | |
| STA 162+00.00 TO 163+10.85 | SB | 63 | | | 94 | 62 | 28 | | | | |
| STA 163+10.85 TO 167+77.19 | SB | 250 | | | 371 | 248 | 113 | | | | |
| STA 167+77.19 TO 168+59.81 | BRIDGE | | | | | 62.5 | | | | | QUANTITY CARRIED FORWARD FROM BRIDGE PLANS |
| STA 168+59.81 TO 174+60.36 | SB | 247 | | | 366 | 244 | 111 | | | | |
| STA 174+60.36 TO 176+01.44 | SB | 80 | | | 119 | 79 | 36 | | | | |
| STA 175+31 (GATEWAY DRIVE) | LT | 171 | | | 254 | 169 | 77 | | | | |
| STA 176+01.44 TO 191+75.00 | SB | 783 | | | 1,163 | 775 | 352 | | | | |
| STA 191+75.00 TO 208+50.00 | SB | 122 | 2 | | 182 | 937 | 426 | | | | |
| STA 208+50.00 TO 227+10.63 | SB | 960 | | | 1,425 | 849 | 386 | | | | |
| STA 216+65 (PRIVATE FIELD ACCESS) | LT | 3 | | 4 | | | | | | | |
| STA 227+10.63 TO 235+60.00 | SB | 477 | | | 708 | 459 | 208 | | | | |
| **SHEET 1 TOTAL** | | **8,269** | **110** | **319** | **11,936** | **10,906** | **4,820** | **4** | **0** | **0** | |

# TABULATION OF SURFACING, CURB AND GUTTER, AND MEDIAN COVER MATERIAL

| LOCATION | SIDE | 304-06007 AGGREGATE BASE COURSE (SPECIAL) | 403-00720 HOT MIX ASPHALT (PATCHING) (ASPHALT) | 403-02000 HOT MIX ASPHALT (SPECIAL) | 403-33721 HOT MIX ASPHALT (GRADING S) (75) (PG 58-28) | 403-34751 HOT MIX ASPHALT (GRADING SX) (75) (PG 64-28) | 411-10253 EMULSIFIED ASPHALT (CSS-1H) | 601-01000 CONCRETE CLASS B | 609-21011 CURB AND GUTTER TYPE 2 (SECTION I-M) | 610-00030 MEDIAN COVER MATERIAL (CONCRETE) | REMARKS |
|---|---|---|---|---|---|---|---|---|---|---|---|
| | | 4 INCH | 3 INCH | 3 INCH | 3 INCH BTM | 2 INCH TOP | TACK COAT | | | 4 INCH | |
| | | CY | TON | TON | TON | TON | GAL | CY | LF | SF | |
| STA 134+30.71 TO 140+68.80 | MEDIAN | 27 | | | | | | | 1,292 | 2,542 | |
| STA 141+93.85 TO 149+02.36 | MEDIAN | 30 | | | | | | | 1,452 | 2,659 | |
| STA 153+21.83 TO 162+09.65 | MEDIAN | 37 | | | | | | | 1,802 | 3,125 | |
| STA 162+71.34 TO 175+22.17 | MEDIAN | 52 | | | | | | | 2,517 | 6,517 | |
| STA 175+78.82 TO 181+98.17 | MEDIAN | 26 | | | | | | | 1,274 | 2,498 | |
| STA 207+42.10 TO 214+58.14 | MEDIAN | 30 | | | | | | | 1,467 | 2,501 | |
| STA 215+33.23 TO 221+53.17 | MEDIAN | 26 | | | | | | | 1,265 | 2,500 | |
| STA 225+56.15 TO 234+69.66 | MEDIAN | 38 | | | | | | | 1,863 | 3,287 | |
| STA 235+28.84 TO 243+51.00 | MEDIAN | 34 | 29 | | | | | | 1,667 | 5,641 | |
| **SHARED USE PATH** | | | | | | | | | | | |
| STA 139+80.50 TO 143+59.72 | LT | 55 | | 70 | | | | | | | INCLUDES 22 CY FOR PATH DETOURS/TRANSITIONS |
| STA 173+42.56 TO 176+01.41 | LT | 38 | | 51 | | | | | | | INCLUDES 4 CY FOR PATH DETOURS/TRANSITIONS |
| STA 215+35.44 TO 228+25.60 | LT | 315 | | 435 | | | | | | | INCLUDES 8 CY FOR PATH DETOURS/TRANSITIONS |
| 10% IRREGULARITIES: | | | 14 | 87 | 1,194 | 1,091 | | | | | |
| **SHEET 2 TOTAL** | | **708** | **43** | **643** | **1,194** | **1,091** | **0** | **0** | **14,599** | **31,270** | |
| **PROJECT TOTAL:** | | **8,978** | **153** | **961** | **13,130** | **11,997** | **4,820** | **4** | **14,599** | **31,270** | |

NOTES:
1. HOT MIX ASPHALT (PATCHING) (ASPHALT) SHALL MEET THE REQUIREMENTS FOR (GRADING SX) (75) (PG 64-28).
2. HOT MIX ASPHALT (SPECIAL) SHALL MEET THE REQUIREMENTS FOR (GRADING SX) (75) (PG 64-28).
3. SEE SUMMARY OF EARTHWORK FOR PAVEMENT DESIGN PARAMETERS.

# TABULATION OF GUARDRAIL

| LOCATION | SIDE | 202-00425 REMOVAL OF BRIDGE RAILING | 202-01130 REMOVAL OF GUARDRAIL TYPE 3 | 202-01300 REMOVAL OF END ANCHORAGE | 210-01130 RESET GUARDRAIL TYPE 3 | 606-00301 GUARDRAIL TYPE 3 (6-3 POST SPACING) | 606-00710 GUARDRAIL TYPE 7 (STYLE CA) | 606-10700 BRIDGE RAIL TYPE 7* | 606-01340 END ANCHORAGE TYPE 3D | 606-02005 END ANCHORAGE (FLARED) | REMARKS |
|---|---|---|---|---|---|---|---|---|---|---|---|
| | | LF | LF | EA | LF | LF | LF | LF | EA | EA | |
| STA 163+26.79 TO 164.64.21 | RT | | 90 | 2 | | | | | | | EXISTING OVERHEAD SIGN STRUCTURE |
| | | | | | | | | | | | |
| STA 166+61.24 TO 168+07.85 | RT | 38 | 147 | 1 | | | | | | | |
| | | | | | | | | | | | |
| STA 168+44.93 TO 169+16.09 | RT | | 71 | 1 | | | | | | | |
| STA 167+16.62 TO 167+90.24 | LT | | 74 | 1 | | | | | | | |
| STA 167+90.24 TO 168+28.28 | LT | 38 | | | | | | | | | |
| STA 168+28.28 TO 169+77.25 | LT | | 149 | 1 | | | | | | | |
| | | | | | | | | | | | |
| STA 166+23.09 TO 167+92.58 | RT | | | | | 160 | | | | 1 | |
| STA 167+92.58 TO 168+75.20 | RT | | | | | | | 108.00 | | | |
| STA 168+75.20 TO 171+99.14 | RT | | | | | 310 | | | 1 | | |
| STA 167+04.31 TO 167+71.31 | LT | | | | | | 70 | | | | |
| STA 167+64.32 TO 168+46.93 | LT | | | | | | | 95.00 | | | |
| STA 168+46.93 TO 170+23.83 | LT | | | | | 165 | | | | 1 | |
| STA 206+50 TO 208+96 | LT | | | | 246 | | | | | | SEE NOTE 6 |
| | | | | | | | | | | | |
| **PROJECT TOTAL:** | | **76** | **531** | **6** | **246** | **635** | **70** | **203** | **1** | **2** | |

NOTES:

1. ALL GUARDRAIL TYPE 3 SHALL BE 6-3 POST SPACING WITH WEATHERING STEEL POSTS. W-BEAM SHALL BE GAUGE 10 WEATHERING STEEL. SEE STANDARD M-606-1.
2. FOLLOWING GUARDRAIL REMOVAL, THE SUBGRADE SHALL BE RECONDITIONED AND RECOMPACTED. THIS WILL NOT BE PAID FOR SEPARATELY AND SHALL BE INCIDENTAL TO THE REMOVAL OF GUARDRAIL.
3. ALL GUARDRAIL POSTS SHALL BE 7-FOOT LONG.
4. A PICKUP BROOM SHALL BE PROVIDED TO PICKUP SAND AND DIRT OF OTHER ERODIBLE MATERIAL LEFT ON THE PAVEMENT FROM GUARDRAIL OPERATIONS.
5. ALL GUARDRAIL SECTIONS SHALL BE COMPLETED, INCLUDING END SECTIONS PRIOR TO OPENING TO TRAFFIC.
6. RESET GUARDRAIL ATTACHED TO EXISTING TIMBER RETAINING WALL.

* CARRIED FORWARD FROM BRIDGE TABULATION

Colorado Department of Transportation
18500 East Colfax Avenue
Aurora, CO 80011
Phone: 303-757-9744 FAX: 303-757-9746
Region 1 JPC

| Sheet Revisions | | |
|---|---|---|
| Date | Description | Initials |
| mm/yy | XXXXXXXX | XXX |
| | | |
| | | |
| | | |
| | | |
| | | |
| | | |

Sec. 31 of T5S, R77W
Sec. 6, 7, 18, 19, 30 of T6S, R77W
SUMMIT COUNTY, COLORADO

| Land Survey Control Diagram | | | | |
|---|---|---|---|---|
| Title Sheet | | | | |
| Project Number: STA 0091-024 | | | | |
| Project Location: SH 9 - Valley Brook to Swan Mtn. Rd. | | | | |
| Project Location: M.P. 87.92 to M.P. 93.52 | | | | |
| Project Code: | Last Mod. Date | Subset Sheets | Sheet No. | Total No. of Sheets |
| 14927 | 05-04-06 | 1 of 1 | 3 | |

## PROJECT COORDINATE SUMMARY TABLE (ADJUSTED FIELD DATA) - US FEET

| POINT NAME | PROJECT COORDINATES | | ELEV. (NAVD | DESCRIPTION | |
|---|---|---|---|---|---|
| | NORTHING | EASTING | | | |
| 879 | 1607328.90 | 2847194.17 | 9465.41 | SH 9 CM-MP 87.92 CDOT Type 2 | |
| 881 | 1608435.89 | 2847016.13 | 9448.52 | SH 9 CM-MP 88.13 CDOT Type 2 | |
| 883 | 1609464.05 | 2846889.73 | 9446.37 | SH 9 CM-MP 88.33 CDOT Type 2 | |
| 885 | 1610334.02 | 2846790.65 | 9432.31 | SH 9 CM-MP 88.49 CDOT Type 2 | |
| 887 | 1611278.04 | 2846713.11 | 9398.78 | SH 9 CM-MP 88.67 CDOT Type 2 | |
| 888 | 1612111.36 | 2846519.31 | 9396.04 | SH 9 CM-MP 88.84 CDOT Type 2 | |
| 889 | 1613213.00 | 2846477.04 | 9372.07 | SH 9 CM-MP 88.99 CDOT Type 2 | |
| 892 | 1614305.95 | 2846714.96 | 9343.30 | SH 9 CM-MP 89.17 CDOT Type 2 | |
| 894 | 1615256.96 | 2846889.45 | 9328.64 | SH 9 CM-MP 89.36 CDOT Type 2 | |
| 895 | 1616271.60 | 2847121.46 | 9314.79 | SH 9 CM-MP 89.50 CDOT Type 2 | |
| 896 | 1616965.92 | 2847301.30 | 9292.46 | SH 9 CM-MP 89.60 CDOT Type 2 | |
| 899 | 1618035.68 | 2847513.85 | 9271.39 | SH 9 CM-MP 89.90 CDOT Type 2 | |
| 901 | 1619129.13 | 2847709.13 | 9250.78 | SH 9 CM-MP 90.09 CDOT Type 2 | |
| 903 | 1620058.85 | 2847912.58 | 9236.17 | SH 9 CM-MP 90.26 CDOT Type 2 | DESTROYED |
| 905 | 1621008.37 | 2848306.22 | 9217.08 | SH 9 CM-MP 90.46 CDOT Type 2 | ROD-NO CAP |
| 906 | 1621975.45 | 2848338.12 | 9201.08 | SH 9 CM-MP 90.64 CDOT Type 2 | |
| 908 | 1623031.11 | 2848611.70 | 9178.14 | SH 9 CM-MP 90.85 CDOT Type 2 | |
| 910 | 1624148.67 | 2848718.92 | 9168.71 | SH 9 CM-MP 91.03 CDOT Type 2 | |
| 912 | 1625210.67 | 2849045.34 | 9151.68 | SH 9 CM-MP 91.24 CDOT Type 2 | |
| 915 | 1626304.32 | 2848753.20 | 9144.22 | SH 9 CM-MP 91.46 CDOT Type 2 | |
| 916 | 1627042.12 | 2848193.24 | 9126.95 | SH 9 CM-MP 91.63 CDOT Type 2 | |
| 918 | 1627800.60 | 2847614.62 | 9113.33 | SH 9 CM-MP 91.81 CDOT Type 2 | |
| 920 | 1628607.62 | 2846769.56 | 9097.11 | SH 9 CM-MP 92.03 CDOT Type 2 | |
| 922 | 1629270.54 | 2846208.43 | 9088.37 | SH 9 CM-MP 92.19 CDOT Type 2 | |
| 924 | 1630413.03 | 2845961.48 | 9073.28 | SH 9 CM-MP 92.41 CDOT Type 2 | |
| 926 | 1631375.34 | 2845779.67 | 9060.12 | SH 9 CM-MP 92.60 CDOT Type 2 | |
| 928 | 1632315.97 | 2845604.93 | 9049.86 | SH 9 CM-MP 92.78 CDOT Type 2 | |
| 931 | 1632981.00 | 2844839.73 | 9038.12 | SH 9 CM-MP 93.12 CDOT Type 2 | |
| 933 | 1633926.52 | 2844417.76 | 9040.76 | SH 9 CM-MP 93.33 CDOT Type 2 | |
| 935 | 1635065.81 | 2844757.80 | 9039.18 | SH 9 CM-MP 93.52 CDOT Type 2 | Traversed |

Construction Surveying and Monumentation Requirements

1. This Project Control Diagram represents the horizontal and vertical control for the project established by the Division. It is possible that some of the survey control monuments listed have been disturbed or obliterated. It is the Contractor's responsibility to verify the existence and stability of the control monuments before submitting a bid price.

2. All Type 1 and Type 2 monuments shall be set flush with the ground. Witness posts shall be installed 2 feet from and facing all Type 1 and Type 2 monuments, or as directed by the Project Engineer.

3. Installation of Type 3 and Type 3-A monuments shall be completed in the same day that installation is commenced. Under no circumstances shall holes in the roadway be left open overnight.

4. When installing Type 3-A monuments, the aluminum monument box shall be positively secured in the roadway surface. The monument box shall be caulked with asphalt caulking between the monument box and the edges of the roadway surface to provide a positive moisture barrier around the monument box.

5. Control survey procedures, statistical analysis, and accuracy obtained for horizontal and vertical control shall be documented in the field book.

6. Legible copies of the field books shall be submitted to the Project Engineer for review on a monthly basis.

7. It is ultimately the prime Contractors responsibility to insure that these requirements, as well as any contained in the CDOT specifications, project special provisions, and CDOT Survey Manual are fulfilled under this contract.

8. The minimum staking intervals for each item are described on the plans or in the CDOT Survey Manual. If the contractor wishes to reduce the minimum intervals, a Contract Modification Order must be negotiated and the cost of the item reduced accordingly.

9. Whenever the contract includes the setting of CDOT Primary Control monuments, a Project Control Diagram, signed and sealed by the P.L.S. in responsible charge, shall be submitted to the Project Engineer. A Micro Station drawing on CD shall accompany the hard copy.

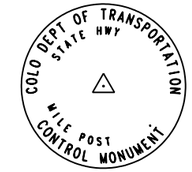


Typical Control Monument Cap Not to Scale

▲ CM-MP - Control Point Monuments set by CDOT. They are CDOT type 2 monuments, a 3-1/4" dia. aluminum control monument cap (as shown) on a 3' X 3/4" dia. finned aluminum security rod on a 3' X 3/4" dia. smooth aluminum rod.

BASIS OF BEARINGS: Bearings used in the calculation of coordinates are based on a grid bearing of N09° 08'12"W from CM-MP 87.92 to CM-MP 88.13 as obtained from a Global Positioning System (GPS) survey based on the Colorado High Accuracy Reference Network (CHARN).

BASIS OF ELEVATIONS: Project is based on a U.S. Coast and Geodetic Survey (USCGS) benchmark J 299, a found 3/4" brass cap in a 10" diameter concrete post stamped "J 299 1951". The mark is approximately 1054 ft. easterly of the present east edge of asphalt of SH 9 at Mile Post 89.64 with a NAVD 1988 and project elevation of 9301.74 ft. (2835.175 m). J 299 1951 is on Colorado Line 89, a First Order Class II benchmark leveled in 1951 and adjusted by National Geodetic Survey in June 1991.

COORDINATE DATUM: Coordinates on this project are for the exlusive use of the CDOT for the construction of this project and are considered Project Coordinates only. Project coordinates are modified Colorado State Plane Central Zone NAD '83(92)' coordinates. State plane coordinates are modified to a mean project elevation of 2810.000 m. The combined project factor used to convert from state plane to project coordinates is 1.000475081. Conversion example: Conversion Meters to Feet: 3937/1200. State Plane Northing in USFT x 1.000475081 = Project Northing in USFT. State Plane Easting in USFT x 1.000475081 = Project Easting in USFT.

NOTE: This Land Survey Control Diagram is prepared for CDOT purposes only. It is not a Boundary Survey, Land Survey Plat, or Right of Way Plat. No determination has been made to determine if the found monuments as shown are in their proper position or if they are at the corners they are intended to monument. Title Policy, Title Commitment, and title research, are not a part of this survey, therefore easements, rights, and restrictions of record were not researched and are not shown on this diagram.

NOTE: Refer to M-629-1 Survey Monuments of the Standard Plans, Colorado Department of Transportation's most current M & S Standards for the survey monument descriptions. Refer to M-100-1 Standard Symbols of the Standard Plans, Colorado Department of Transportation's, most current M & S Standards for standard symbol definitions.

NOTE: According to Colorado law you must commence any legal action based upon any defect in this survey within three years after you first discover such defect. In no event may any action based upon any defect in this survey be commenced more than ten years from the date of the statement shown hereon.

NOTE: No guarantee as to the accuracy of the information contained on the attached drawing is either stated or implied unless this copy bears an original signature of the professional land surveyor hereon named.

### *SURVEYOR STATEMENT (LAND SURVEY CONTROL DIAGRAM)*

*I, Betty J. Claybrook, a professional land surveyor licensed in the State of Colorado, do hereby state to the Colorado Department of Transportation this Land Survey Control Diagram was prepared and the field survey it represents was performed under my responsible charge and, based upon my knowledge, information and belief is in accordance with applicable standards of practice defined by Colorado Department of Transportation publications. This statement is not a guaranty or warranty, either expressed or implied.*

*Betty J. Claybrook, PLS No. 31150* *Date*

Colorado Department of Transportation
18500 East Colfax Avenue
Aurora, CO 80011
Phone: 303-757-9744 FAX: 303-757-9746
Region 1 JPC

| Sheet Revisions | | |
|---|---|---|
| Date | Description | Initials |
| mm/yy | XXXXXXXX | XXX |

Sec. 31 of T5S, R77W
Sec. 6, 7, 18, 19, 30 of T6S, R77W
SUMMIT COUNTY, COLORADO

Land Survey Control Diagram
Monumentation Sheet
Project Number: STA 0091-024
Project Location: SH 9 - Valley Brook to Swan Mtn. Rd.
Project Location: M.P. 87.92 to 93.52

| Project Code: | Last Mod. Date | Subset Sheets | Sheet No. | Total No. of Sheets |
|---|---|---|---|---|
| 14927 | 05-04-06 | 1 of 1 | 3A | |

GEODETIC COORDINATE SUMMARY TABLE
(ADJUSTED FIELD DATA) - METERS

| POINT NAME | GEODETIC COORDINATES NAD-83(92) (CHARN) | | NAD83/92 ZONE 0502 | | ELLIP. HEIGHT | ELEV. (NAVD | MAPPING ANGLE | GRID SCALE | DESCRIPTION |
|---|---|---|---|---|---|---|---|---|---|
| | LATITUDE | LONGITUDE | NORTHING | EASTING | | | | | |
| 0001 | 39ø 36' 03.21581" N | 106ø 05' 23.07948" W | 501181.547 | 863751.001 | 2786.529 | 2799.093 | -0ø 22' 19.00405" | 0.999973905 | OVERLOOK 1993 (NGS PID AA5369) |
| 0002 | 39ø 29' 10.77095" N | 106ø 03' 08.25642" W | 488441.984 | 866890.139 | 2956.438 | 2969.036 | -0ø 20' 53.97256" | 0.999958472 | FERRIS 1998 (NGS PID AH5680) |
| 0003 | 39ø 31' 23.18370" N | 106ø 02' 44.53913" W | 492521.976 | 867481.414 | 2822.559 | 2835.175 | -0ø 20' 39.01431" | 0.999962990 | USCGS BM J 299 1951 (NGS PID KL0013) |
| 0879 | 39ø 29' 51.08844" N | 106ø 02' 46.62885" W | 489682.187 | 867414.426 | 2872.451 | 2885.064 | -0ø 20' 40.33227" | 0.999959804 | SH 9 CM-MP 87.92 CDOT Type 2 |
| 0881 | 39ø 30' 02.01351" N | 106ø 02' 48.98405" W | 490019.439 | 867360.183 | 2867.308 | 2879.915 | -0ø 20' 41.81768" | 0.999960171 | SH 9 CM-MP 88.13 CDOT Type 2 |
| 0883 | 39ø 30' 12.16293" N | 106ø 02' 50.67475" W | 490332.675 | 867321.677 | 2866.643 | 2879.258 | -0ø 20' 42.88398" | 0.999960515 | SH 9 CM-MP 88.33 CDOT Type 2 |
| 0885 | 39ø 30' 20.75121" N | 106ø 02' 52.00516" W | 490597.717 | 867291.490 | 2862.355 | 2874.973 | -0ø 20' 43.72306" | 0.999960808 | SH 9 CM-MP 88.49 CDOT Type 2 |
| 0887 | 39ø 30' 30.07223" N | 106ø 02' 53.06652" W | 490885.316 | 867267.869 | 2852.141 | 2864.755 | -0ø 20' 44.39244" | 0.999961128 | SH 9 CM-MP 88.67 CDOT Type 2 |
| 0888 | 39ø 30' 38.29281" N | 106ø 02' 55.60225" W | 491139.193 | 867208.826 | 2851.303 | 2863.920 | -0ø 20' 45.99170" | 0.999961412 | SH 9 CM-MP 88.84 CDOT Type 2 |
| 0889 | 39ø 30' 49.17301" N | 106ø 02' 56.22627" W | 491474.813 | 867195.947 | 2843.996 | 2856.614 | -0ø 20' 46.38527" | 0.999961790 | SH 9 CM-MP 88.99 CDOT Type 2 |
| 0892 | 39ø 30' 59.98418" N | 106ø 02' 53.27601" W | 491807.790 | 867268.430 | 2835.223 | 2847.842 | -0ø 20' 44.52457" | 0.999962168 | SH 9 CM-MP 89.17 CDOT Type 2 |
| 0894 | 39ø 31' 09.38926" N | 106ø 02' 51.12363" W | 492097.520 | 867321.589 | 2830.756 | 2843.376 | -0ø 20' 43.16709" | 0.999962500 | SH 9 CM-MP 89.36 CDOT Type 2 |
| 0895 | 39ø 31' 19.42635" N | 106ø 02' 48.24223" W | 492406.636 | 867392.274 | 2826.532 | 2839.153 | -0ø 20' 41.34982" | 0.999962856 | SH 9 CM-MP 89.50 CDOT Type 2 |
| 0896 | 39ø 31' 26.29595" N | 106ø 02' 46.00153" W | 492618.163 | 867447.064 | 2819.727 | 2832.347 | -0ø 20' 39.93663" | 0.999963101 | SH 9 CM-MP 89.60 CDOT Type 2 |
| 0899 | 39ø 31' 36.87638" N | 106ø 02' 43.37218" W | 492944.073 | 867511.819 | 2813.304 | 2825.926 | -0ø 20' 38.27833" | 0.999963480 | SH 9 CM-MP 89.90 CDOT Type 2 |
| 0901 | 39ø 31' 47.68972" N | 106ø 02' 40.96478" W | 493277.199 | 867571.312 | 2807.021 | 2819.642 | -0ø 20' 36.76001" | 0.999963871 | SH 9 CM-MP 90.09 CDOT Type 2 |
| 0903 | 39ø 31' 56.88607" N | 106ø 02' 38.44049" W | 493560.442 | 867633.294 | 2802.570 | 2815.190 | -0ø 20' 35.16796" | 0.999964205 | SH 9 CM-MP 90.26 CDOT Type 2 |
| 0905 | 39ø 32' 06.28933" N | 106ø 02' 33.49107" W | 493849.720 | 867753.219 | 2796.752 | 2809.373 | -0ø 20' 32.04642" | 0.999964549 | SH 9 CM-MP 90.46 CDOT Type 2 |
| 0906 | 39ø 32' 15.84462" N | 106ø 02' 33.15786" W | 494144.347 | 867762.936 | 2791.879 | 2804.495 | -0ø 20' 31.83626" | 0.999964901 | SH 9 CM-MP 90.64 CDOT Type 2 |
| 0908 | 39ø 32' 26.28922" N | 106ø 02' 29.74774" W | 494465.960 | 867846.284 | 2784.893 | 2797.504 | -0ø 20' 29.68553" | 0.999965288 | SH 9 CM-MP 90.85 CDOT Type 2 |
| 0910 | 39ø 32' 37.33539" N | 106ø 02' 28.46471" W | 494806.430 | 867878.949 | 2782.019 | 2794.629 | -0ø 20' 28.87634" | 0.999965700 | SH 9 CM-MP 91.03 CDOT Type 2 |
| 0912 | 39ø 32' 47.84565" N | 106ø 02' 24.38037" W | 495129.974 | 867978.396 | 2776.832 | 2789.437 | -0ø 20' 26.30039" | 0.999966095 | SH 9 CM-MP 91.24 CDOT Type 2 |
| 0915 | 39ø 32' 58.63223" N | 106ø 02' 28.19114" W | 495463.163 | 867889.394 | 2774.562 | 2787.163 | -0ø 20' 28.70380" | 0.999966502 | SH 9 CM-MP 91.46 CDOT Type 2 |
| 0916 | 39ø 33' 05.88760" N | 106ø 02' 35.39268" W | 495687.937 | 867718.799 | 2769.299 | 2781.901 | -0ø 20' 33.24574" | 0.999966778 | SH 9 CM-MP 91.63 CDOT Type 2 |
| 0918 | 39ø 33' 13.34609" N | 106ø 02' 42.83445" W | 495919.014 | 867542.517 | 2765.148 | 2777.749 | -0ø 20' 37.93919" | 0.999967063 | SH 9 CM-MP 91.81 CDOT Type 2 |
| 0920 | 39ø 33' 21.26803" N | 106ø 02' 53.68038" W | 496164.877 | 867285.066 | 2760.204 | 2772.805 | -0ø 20' 44.77960" | 0.999967367 | SH 9 CM-MP 92.03 CDOT Type 2 |
| 0922 | 39ø 33' 27.78320" N | 106ø 03' 00.89248" W | 496366.839 | 867114.114 | 2757.538 | 2770.141 | -0ø 20' 49.32819" | 0.999967618 | SH 9 CM-MP 92.19 CDOT Type 2 |
| 0924 | 39ø 33' 39.05456" N | 106ø 03' 04.13251" W | 496714.906 | 867038.878 | 2752.939 | 2765.542 | -0ø 20' 51.37165" | 0.999968055 | SH 9 CM-MP 92.41 CDOT Type 2 |
| 0926 | 39ø 33' 48.54981" N | 106ø 03' 06.52739" W | 497008.078 | 866983.490 | 2748.928 | 2761.531 | -0ø 20' 52.88207" | 0.999968425 | SH 9 CM-MP 92.60 CDOT Type 2 |
| 0928 | 39ø 33' 57.83138" N | 106ø 03' 08.83056" W | 497294.647 | 866930.254 | 2745.799 | 2758.404 | -0ø 20' 54.33466" | 0.999968789 | SH 9 CM-MP 92.78 CDOT Type 2 |
| 0931 | 39ø 34' 04.35482" N | 106ø 03' 18.64892" W | 497497.253 | 866697.132 | 2742.220 | 2754.823 | -0ø 21' 00.52700" | 0.999969046 | SH 9 CM-MP 93.12 CDOT Type 2 |
| 0933 | 39ø 34' 13.66960" N | 106ø 03' 24.10872" W | 497785.310 | 866568.577 | 2743.022 | 2755.629 | -0ø 21' 03.97043" | 0.999969415 | SH 9 CM-MP 93.33 CDOT Type 2 |

Colorado Department of Transportation
18500 East Colfax Avenue
Aurora, CO 80011
Phone: 303-757-9744 FAX: 303-757-9746
Region 1 JPC

| Sheet Revisions | | |
|---|---|---|
| Date | Description | Initials |
| mm/yy | XXXXXXXX | XXX |

Sec. 31 of T5S, R77W
Sec. 6, 7, 18, 19, 30 of T6S, R77W
SUMMIT COUNTY, COLORADO

# Land Survey Control Diagram
## Plan Sheet

Project Number: STA 009A-024
Project Location: SH 9-Valley Brook to Swan Mtn. Rd.
Project Location: M.P. 87.92 to M.P. 93.52

| Project Code: | Last Mod. Date | Subset Sheets | Sheet No. | Total No. of Sheets |
|---|---|---|---|---|
| 14927 | 06-21-06 | 1 of 10 | 3B | |

| Point # | Northing | Easting | Elevation | Description |
|---|---|---|---|---|
| 0145 | 1610165.26 | 2846884.69 | 9439.27 | Found 1 1/2" alum cap "LS 16836" |
| 0146 | 1609900.91 | 2846928.44 | 9450.17 | Found 1 1/2" alum cap "LS 16836" |
| 0147 | 1609718.60 | 2846945.71 | 9456.13 | Found 1 1/2" alum cap "LS 16836" |
| 0148 | 1609224.85 | 2846992.59 | 9455.15 | Found 1 1/2" alum cap "LS 16836" |
| 0149 | 1607402.76 | 2847320.02 | 0.00 | Found 1 1/2" alum cap "LS 27924" |
| 0150 | 1607258.52 | 2847350.03 | 0.00 | Found 1 1/2" alum cap "LS 27924" |
| 0151 | 1607230.23 | 2847355.20 | 0.00 | Found 1 1/2" alum cap "LS 27924" |
| 6038 | 1607515.26 | 2846811.20 | 9463.16 | Found 2" alum cap "PLS 23901" |
| 6039 | 1607435.68 | 2846304.83 | 9465.42 | Found 2" alum cap "Not legible" |
| 6054 | 1608720.56 | 2847051.38 | 9450.09 | Found 1 1/2" alum cap "LS 16836" |
| 7000 | 1608073.47 | 2846205.82 | 9446.57 | Found original stone "Cor.#5 Masonic Placer" |
| 7001 | 1609092.66 | 2847007.05 | 8452.59 | Found 1 1/2" alum cap "Not legible" |

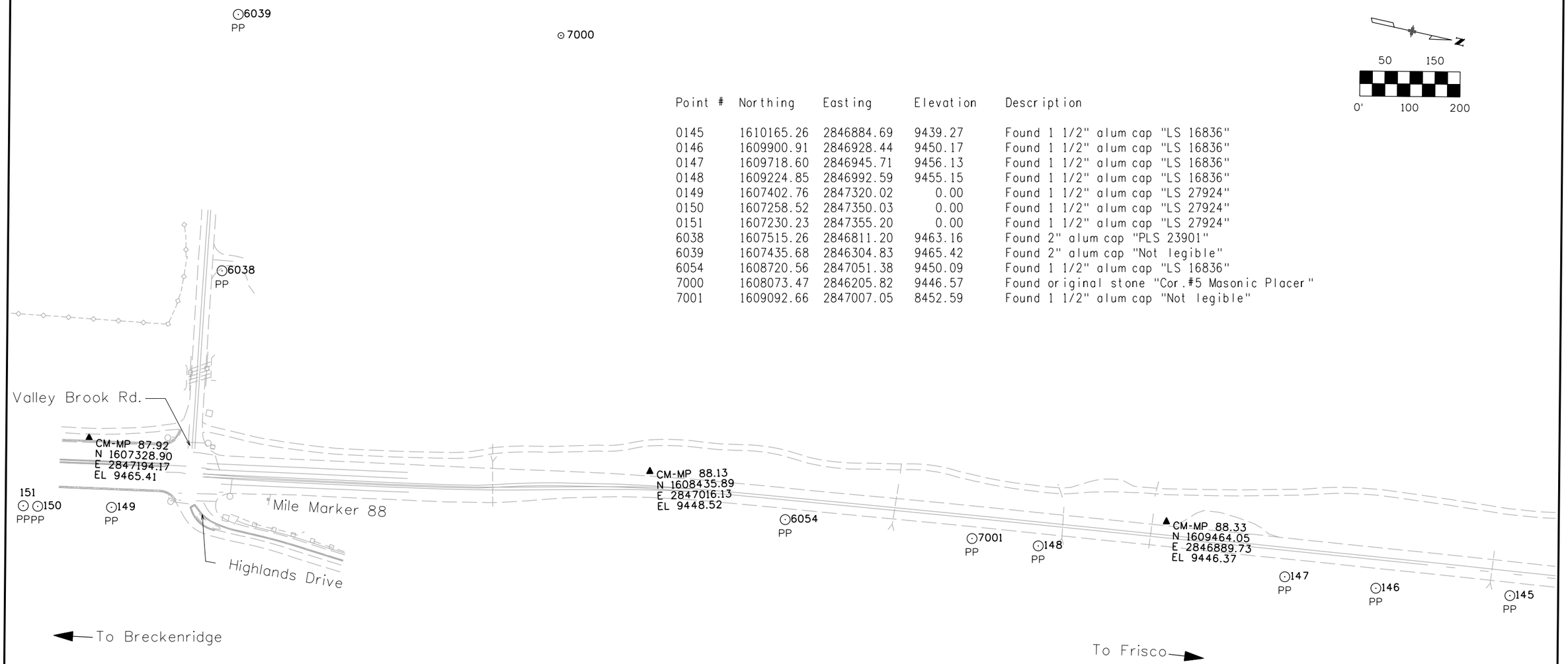

Colorado Department of Transportation
18500 East Colfax Avenue
Aurora, CO 80011
Phone: 303-757-9744 FAX: 303-757-9746
Region 1 JPC

| Sheet Revisions | | |
|---|---|---|
| Date | Description | Initials |
| mm/yy | XXXXXXXX | XXX |

Sec. 31 of T5S, R77W
Sec. 6, 7, 18, 19, 30 of T6S, R77W
SUMMIT COUNTY, COLORADO

# Land Survey Control Diagram
## Plan Sheet

Project Number: STA 009A-024
Project Location: SH 9-Valley Brook to Swan Mtn. Rd.
Project Location: M.P. 87.92 to M.P. 93.52

| Project Code: | Last Mod. Date | Subset Sheets | Sheet No. | Total No. of Sheets |
|---|---|---|---|---|
| 14927 | 06-21-06 | 2 of 10 | 3C | |

| Point # | Northing | Easting | Elevation | Description |
|---|---|---|---|---|
| 0117 | 1612993.66 | 2846584.68 | 9413.75 | Found 1 1/2" alum cap "RLS 4440" |
| 0118 | 1612928.96 | 2846576.39 | 9417.11 | Found 1 1/2" alum cap "LS 16836" |
| 0122 | 1612807.58 | 2846546.28 | 9407.45 | Found 1 1/2" alum cap "LS 16836" |
| 0123 | 1612763.67 | 2846545.10 | 9411.83 | Found 1 1/2" alum cap "LS 16836" |
| 0124 | 1612675.57 | 2846556.09 | 9418.95 | Found 1 1/2" alum cap "LS 16836" |
| 0125 | 1612614.06 | 2846571.66 | 9415.00 | Found 1 1/2" alum cap "LS 16836" |
| 0126 | 1612537.38 | 2846583.74 | 9417.55 | Found 1 1/2" alum cap "LS 16836" |
| 0127 | 1612497.58 | 2846584.57 | 9419.44 | Found 1 1/2" alum cap "LS 16836" |
| 0128 | 1612205.72 | 2846594.26 | 9430.77 | Found 1 1/2" alum cap "LS 16836" |
| 0129 | 1612000.63 | 2846669.79 | 9463.69 | Found 1 1/2" alum cap "LS 16836" |
| 0130 | 1611951.89 | 2846677.86 | 9433.76 | Found 1 1/2" alum cap "LS 16836" |
| 0131 | 1611937.62 | 2846679.51 | 9434.45 | Found 1 1/2" alum cap "LS 16836" |
| 0132 | 1611746.67 | 2846741.73 | 9438.10 | Found 1 1/2" alum cap "LS 16836" |
| 0133 | 1611605.96 | 2846786.24 | 9445.25 | Found 1 1/2" alum cap "LS 16836" |
| 0134 | 1611585.03 | 2846790.67 | 9442.60 | Found 1 1/2" alum cap "LS 16836" |
| 0135 | 1611582.88 | 2846785.52 | 9438.85 | Found 1 1/2" alum cap "LS 16836" |
| 0136 | 1611415.05 | 2846795.70 | 9411.98 | Found 1 1/2" alum cap "LS 16836" |
| 0137 | 1611337.40 | 2846791.72 | 9409.44 | Found 1 1/2" alum cap "LS 16836" |
| 0138 | 1611307.06 | 2846798.25 | 9410.32 | Found 1 1/2" alum cap "LS 16836" |
| 0139 | 1611197.13 | 2846821.28 | 9410.72 | Found 1 1/2" alum cap "LS 16836" |

| Point # | Northing | Easting | Elevation | Description |
|---|---|---|---|---|
| 0140 | 1611119.38 | 2846834.58 | 9412.61 | Found 1 1/2" alum cap "LS 16836" |
| 0141 | 1610932.34 | 2846841.58 | 9413.48 | Found 1 1/2" alum cap "LS 16836" |
| 0142 | 1610899.96 | 2846838.97 | 9413.41 | Found 1 1/2" alum cap "LS 16836" |
| 0143 | 1610814.08 | 2846821.24 | 9413.78 | Found 1 1/2" alum cap "LS 16836" |
| 0144 | 1610813.16 | 2846831.12 | 9416.58 | Found 1 1/2" alum cap "LS 16836" |
| 0145 | 1610165.26 | 2846884.69 | 9439.27 | Found 1 1/2" alum cap "LS 16836" |
| 6043 | 1611380.47 | 2846291.84 | 9387.17 | Found 1 1/4" red plastic cap "LS 15242" |
| 6044 | 1612655.60 | 2846120.72 | 0000.00 | Found 1 1/4" yellow plastic cap "LS 15296" |
| 6045 | 1612655.89 | 2846120.59 | 9365.09 | Found 3 1/4"alum cap "LS 23901" |
| 6046 | 1612693.31 | 2846135.78 | 9365.28 | Found 3 1/4"alum cap "LS 23901" |
| 6048 | 1612992.80 | 2846134.21 | 9361.96 | Found 2" alum cap "PLS 23901" |
| 6049 | 1612992.47 | 2846017.23 | 9372.05 | Found 2" alum cap "PLS 23901" |
| 6055 | 1611341.55 | 2846811.10 | 9418.62 | Found 1 1/2" alum cap "LS 16836" |
| 6056 | 1611822.67 | 2846709.33 | 9436.73 | Found 1 1/2" alum cap "LS 16836" |
| 6057 | 1612311.65 | 2846579.10 | 9418.78 | Found 1 1/2" alum cap "LS 16836" |
| 6058 | 1612930.57 | 2846556.48 | 9407.73 | Found 1 1/2" alum cap "LS 16836" |
| 6059 | 1612994.28 | 2846634.60 | 9423.11 | Found original stone "MS 13465 & 14025" |
| 6060 | 1613075.98 | 2846602.04 | 9390.51 | Found 1 1/2" alum cap " |

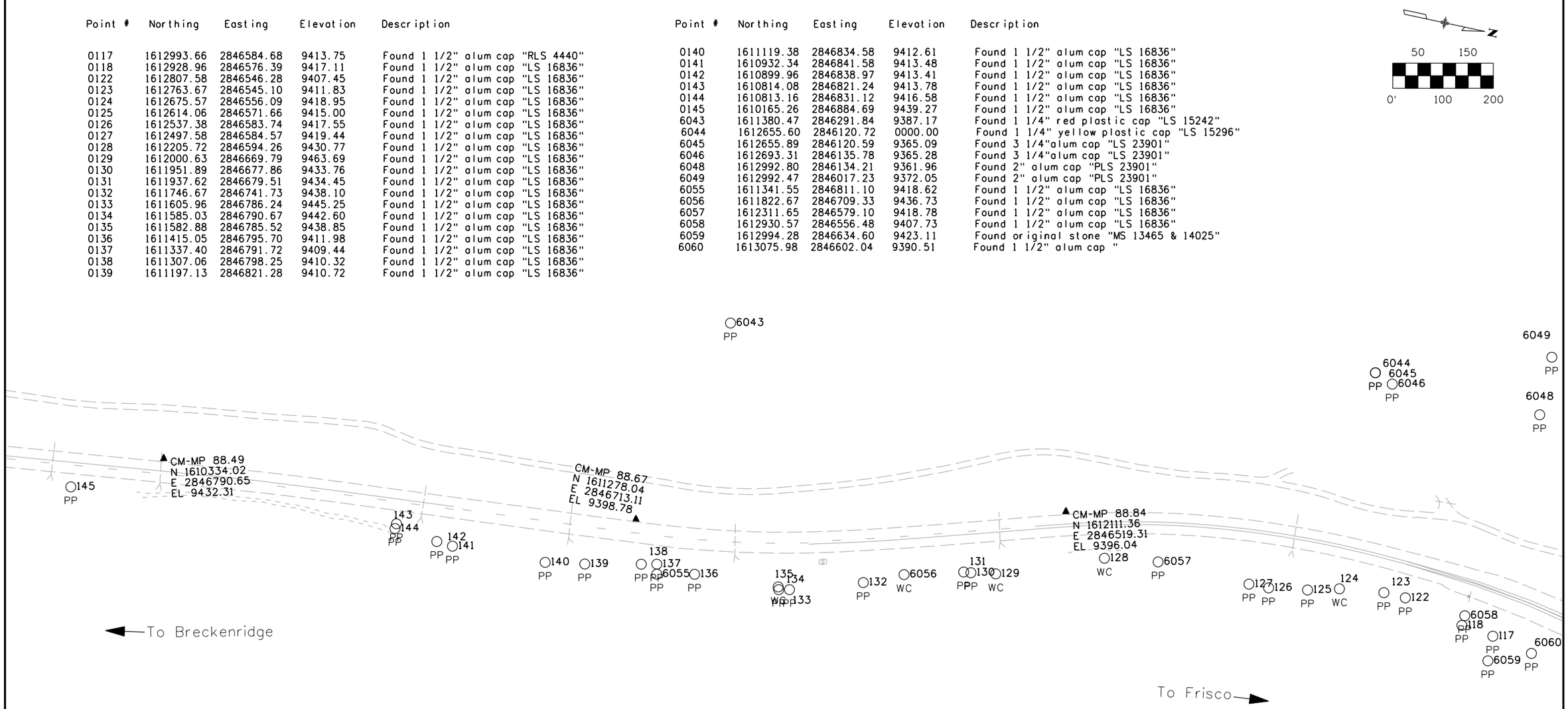

Colorado Department of Transportation
18500 East Colfax Avenue
Aurora, CO 80011
Phone: 303-757-9744 FAX: 303-757-9746
Region 1 JPC

| Sheet Revisions | | |
|---|---|---|
| Date | Description | Initials |
| mm/yy | XXXXXXXX | XXX |

Sec. 31 of T5S, R77W
Sec. 6, 7, 18, 19, 30 of T6S, R77W
SUMMIT COUNTY, COLORADO

# Land Survey Control Diagram
## Plan Sheet

Project Number: STA 009A-024
Project Location: SH 9-Valley Brook to Swan Mtn. Rd.
Project Location: M.P. 87.92 to M.P. 93.52

| Project Code: | Last Mod. Date | Subset Sheets | Sheet No. | Total No. of Sheets |
|---|---|---|---|---|
| 14927 | 06-21-06 | 3 of 10 | 3D | |

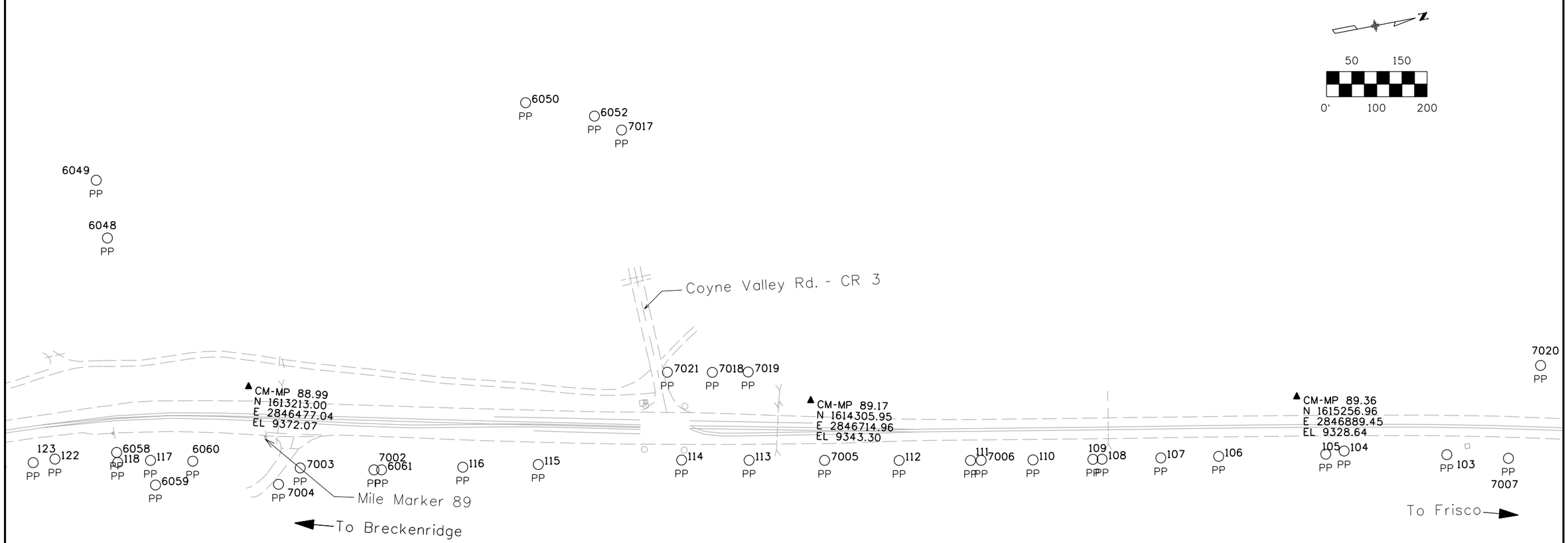


| Point # | Northing | Easting | Elevation | Description |
|---|---|---|---|---|
| 0103 | 1615528.39 | 2847059.00 | 9345.25 | Found 1 1/2" alum cap "RLS 4440" |
| 0104 | 1615329.04 | 2847013.37 | 9337.53 | Found #5 rebar B4P20 |
| 0105 | 1615292.06 | 2847012.65 | 9341.07 | Found 1 1/2" alum cap "RLS 4440" |
| 0106 | 1615082.03 | 2846976.94 | 9341.61 | Found 1 1/2" alum cap "RLS 4440" |
| 0107 | 1614968.37 | 2846958.21 | 9341.78 | Found 1 1/2" alum cap "RLS 4440" |
| 0108 | 1614853.14 | 2846938.61 | 9342.28 | Found 1" yellow plastic cap "RLS 10847" |
| 0109 | 1614835.15 | 2846935.50 | 9342.95 | Found 1 1/4" yellow plastic cap "RLS 10847" |
| 0110 | 1614717.90 | 2846914.20 | 9346.35 | Found 1 1/2" alum cap "RLS 4440" |
| 0111 | 1614595.66 | 2846892.00 | 9344.99 | Found 1 1/2" alum cap "stamping illegible" |
| 0112 | 1614456.16 | 2846865.15 | 9350.44 | Found 1 1/2" alum cap "RLS 4440" |
| 0113 | 1614163.20 | 2846808.58 | 9354.99 | Found 1 1/2" alum cap "RLS 4440" |
| 0114 | 1614031.39 | 2846782.93 | 9357.11 | Found 1 1/2" alum cap "RLS 4440" |
| 0115 | 1613749.71 | 2846737.91 | 9371.02 | Found #4 rebar B4P31 |
| 0116 | 1613601.18 | 2846714.85 | 9384.57 | Found 1 1/2" alum cap "RLS 4440" |
| 0117 | 1612993.66 | 2846584.68 | 9413.75 | Found 1 1/2" alum cap "RLS 4440" |
| 0118 | 1612928.96 | 2846576.39 | 9417.11 | Found 1 1/2" alum cap "LS 16836" |
| 0122 | 1612807.58 | 2846546.28 | 9407.45 | Found 1 1/2" alum cap "LS 16836" |
| 0123 | 1612763.67 | 2846545.10 | 9411.83 | Found 1 1/2" alum cap "LS 16836" |
| 6048 | 1612992.80 | 2846134.21 | 9361.96 | Found 2" alum cap "PLS 23901" |

| Point # | Northing | Easting | Elevation | Description |
|---|---|---|---|---|
| 6049 | 1612992.47 | 2846017.23 | 9372.05 | Found 2" alum cap "PLS 23901" |
| 6050 | 1613860.46 | 2846026.68 | 9357.27 | Found 2" alum cap "PLS 23901" |
| 6052 | 1613989.91 | 2846078.60 | 0.00 | Found #4 rebar "PLS 23901" |
| 6058 | 1612930.57 | 2846556.48 | 9407.73 | Found 1 1/2" alum cap "LS 16836" |
| 6059 | 1612994.28 | 2846634.60 | 9423.11 | Found original stone "MS 13465 & 14025" |
| 6060 | 1613075.98 | 2846602.04 | 9390.51 | Found 1 1/2" alum cap "B8P70 |
| 6061 | 1613441.55 | 2846689.59 | 9387.99 | Found 1 1/2" alum cap "RLS 4440" |
| 7002 | 1613426.74 | 2846686.84 | 9388.17 | Found 1 1/2" alum cap "RLS 4440" |
| 7003 | 1613283.38 | 2846655.56 | 9382.98 | Found 1 1/2" alum cap "RLS 4440" |
| 7004 | 1613234.90 | 2846679.35 | 9386.33 | Found 1 1/2" alum cap "RLS 4440" |
| 7005 | 1614310.66 | 2846837.06 | 9351.50 | Found 1 1/2" alum cap B10P22 |
| 7006 | 1614616.42 | 2846895.67 | 9345.73 | Found 1" red plastic cap "PLS 15242" |
| 7007 | 1615647.29 | 2847089.17 | 9340.17 | Found 1 1/2" alum cap "RLS 4440" |
| 7017 | 1614037.75 | 2846116.01 | 9342.56 | Found 2" alum cap "PLS 23901" |
| 7018 | 1614124.25 | 2846623.13 | 9344.02 | Found 2" alum cap "PLS 23901" |
| 7019 | 1614194.39 | 2846635.87 | 9343.80 | Found 2" alum cap "PLS 23901" |
| 7020 | 1615744.86 | 2846919.90 | 9317.45 | Found 2" alum cap "PLS 23901" |
| 7021 | 1614036.46 | 2846606.07 | 9347.94 | Found 2" alum cap "PLS 23901" |

Colorado Department of Transportation
18500 East Colfax Avenue
Aurora, CO 80011
Phone: 303-757-9744 FAX: 303-757-9746
Region 1 JPC

| Sheet Revisions | | |
|---|---|---|
| Date | Description | Initials |
| mm/yy | XXXXXXXX | XXX |
| | | |
| | | |
| | | |
| | | |
| | | |
| | | |

Sec. 31 of T5S, R77W
Sec. 6, 7, 18, 19, 30 of T6S, R77W
SUMMIT COUNTY, COLORADO

# Land Survey Control Diagram
## Plan Sheet

Project Number: STA 009A-024
Project Location: SH 9-Valley Brook to Swan Mtn. Rd.
Project Location: M.P. 87.92 to M.P. 93.52

| Project Code: | Last Mod. Date | Subset Sheets | Sheet No. | Total No. of Sheets |
|---|---|---|---|---|
| 14927 | 06-21-06 | 4 of 10 | 3E | |

| Point # | Northing | Easting | Elevation | Description |
|---|---|---|---|---|
| 0100 | 1616357.88 | 2847120.56 | 9310.64 | Found 1 1/4" red plastic cap "LS 9939" |
| 0101 | 1616111.47 | 2847212.28 | 9323.35 | Found 1 1/2" alum cap "RLS 4440" |
| 0102 | 1615763.74 | 2847120.25 | 9330.46 | Found 1 1/2" alum cap "RLS 4440" |
| 0119 | 1618051.89 | 2847663.48 | 0.00 | Found 1 1/4" red plastic cap,"LS 9939" |
| 0120 | 1617922.52 | 2847649.93 | 9272.33 | Found 1 1/4" red plastic cap "LS 9939" |
| 0121 | 1617921.94 | 2847653.05 | 9273.21 | Found 1 1/2" alum cap "LS 16836" |
| 0209 | 1618472.17 | 2847530.58 | 9259.55 | Found 1 1/2" alum cap, "PE-PLS 2562" |
| 0210 | 1618452.09 | 2847702.74 | 0.00 | Found 1 1/4" red plastic cap, "LS 9939" |
| 0211 | 1618268.74 | 2847529.17 | 0.00 | Found 1 1/2" alum cap, "PE-PLS 25620" |
| 0214 | 1617105.13 | 2847473.30 | 9291.07 | Found 1" red plastic cap "LS 9939" |
| 0215 | 1617101.61 | 2847472.40 | 9291.33 | Found 1 1/2" alum cap "RLS 4440" |
| 0216 | 1616700.72 | 2847367.82 | 9298.77 | Found 1 1/2" alum cap "RLS 4440" |
| 0217 | 1616575.60 | 2847335.24 | 9301.38 | Found 1" yellow plastic cap "PLS 10847" |
| 0218 | 1616459.43 | 2847304.35 | 9310.36 | Found 1 1/2" alum cap "RLS 4440" |
| 0219 | 1616343.58 | 2847273.70 | 9322.13 | Found 1 1/2" alum cap "RLS 4440" |
| 0220 | 1616111.53 | 2847209.48 | 9324.05 | Found 1 1/2" red plastic cap "PLS 18974" |
| 0221 | 1615995.01 | 2847181.86 | 9328.01 | Found 1 1/4" red plastic cap "LS 9939" |
| 0222 | 1615879.69 | 2847151.11 | 9327.74 | Found 1 1/2" alum cap "RLS 4440" |
| 7009 | 1616634.47 | 2847350.87 | 9299.96 | Found 1" yellow plastic cap "PLS 10847" |

| Point # | Northing | Easting | Elevation | Description |
|---|---|---|---|---|
| 7010 | 1616998.78 | 2847445.73 | 9291.80 | Found 1 1/2" alum cap "RLS 4440" |
| 7011 | 1617653.92 | 2847605.28 | 9279.24 | Found 1" yellow plastic cap "PLS 26292" |
| 7014 | 1617910.64 | 2847644.39 | 9272.41 | Found 1 1/2" yellow plastic cap "not legible |
| 7015 | 1617923.24 | 2847645.32 | 9272.01 | Found #4 rebar |
| 7020 | 1615744.86 | 2846919.90 | 9317.45 | Found 2" alum cap "PLS 23901" |
| 7022 | 1615937.20 | 2847006.33 | 9316.36 | Found 2" alum cap "PLS 23901" |
| 7023 | 1616145.14 | 2846963.66 | 9309.23 | Found 2" alum cap "PLS 23901" |
| 7024 | 1616139.91 | 2846982.39 | 9311.79 | Found 2" alum cap "PLS 23901" |
| 7025 | 1616384.66 | 2847040.62 | 9304.56 | Found 2" alum cap "PLS 23901" |
| 7026 | 1616362.88 | 2847122.67 | 9309.96 | Found 2" alum cap "PLS 23901" |
| 7027 | 1617453.91 | 2847403.89 | 9282.52 | Found 2" alum cap "PLS 23901" |
| 7028 | 1617645.20 | 2847450.96 | 9280.34 | Found #5 rebar |
| 7029 | 1617661.30 | 2847454.38 | 9280.83 | Found P-K Nail |
| 7030 | 1618248.07 | 2847073.21 | 9266.95 | Found 1 1/2" alum cap "PE-PLS 25620" |
| 7031 | 1618185.70 | 2847524.75 | 9266.57 | Found 2" alum cap "PLS 23901" |
| 7032 | 1618184.12 | 2847521.08 | 9267.33 | Found 1 1/2" alum cap "LS 5840" |
| 7033 | 1618068.39 | 2847510.09 | 9770.60 | Found #4 hexagon bolt |
| 7034 | 1618253.41 | 2847682.98 | 9266.95 | Found 1 1/4" red plastic cap "LS 9939" |
| 7035 | 1618450.20 | 2847703.73 | 9261.95 | Found 1 1/4" red plastic cap "LS 9939" |

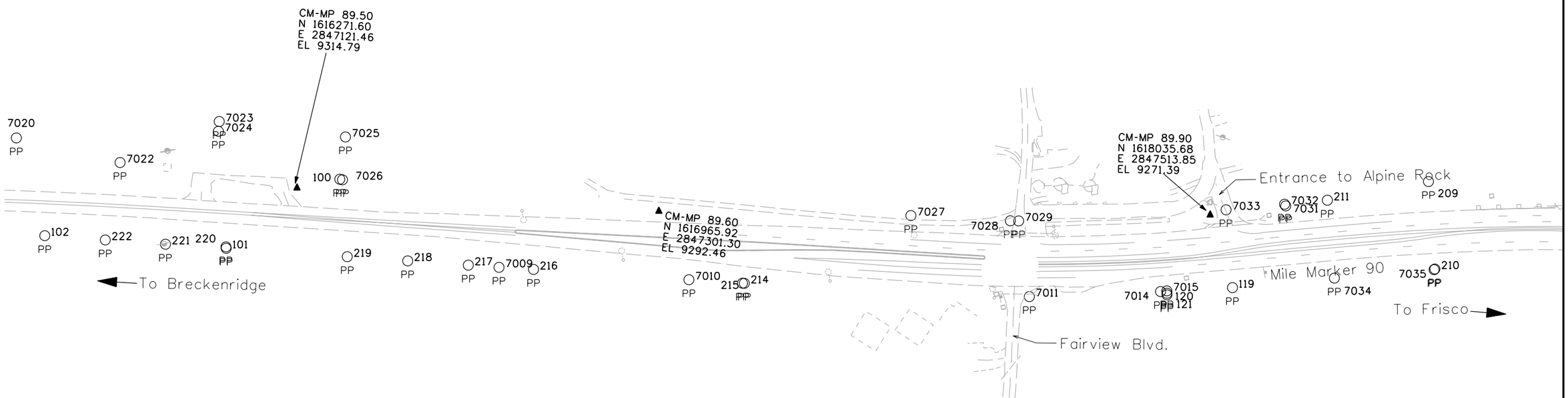

Colorado Department of Transportation
18500 East Colfax Avenue
Aurora, CO 80011
Phone: 303-757-9744 FAX: 303-757-9746
Region 1 JPC

| Sheet Revisions | | |
|---|---|---|
| Date | Description | Initials |
| mm/yy | XXXXXXXX | XXX |

Sec. 31 of T5S, R77W
Sec. 6, 7, 18, 19, 30 of T6S, R77W
SUMMIT COUNTY, COLORADO

# Land Survey Control Diagram
## Plan Sheet

Project Number: STA 009A-024
Project Location: SH 9-Valley Brook to Swan Mtn. Rd.
Project Location: M.P. 87.92 to M.P. 93.52

| Project Code: | Last Mod. Date | Subset Sheets | Sheet No. | Total No. of Sheets |
|---|---|---|---|---|
| 14927 | 06-21-06 | 5 of 10 | 3F | |

| Point # | Northing | Easting | Elevation | Description |
|---|---|---|---|---|
| 0207 | 1619175.85 | 2847696.10 | 0.00 | Found 1 1/4" red plastic cap, "LS 9939" |
| 0208 | 1618734.26 | 2847749.80 | 9255.47 | Found 1 1/4" red plastic cap, "LS 9939" |
| 0213 | 1618979.09 | 2847650.87 | 0.00 | Found 1 1/2" alum cap,"LS 5840" |
| 7036 | 1618927.66 | 2847792.43 | 9251.33 | Found #4 rebar |
| 7037 | 1618961.58 | 2847646.98 | 9251.74 | Found 1 1/2" alum cap "LS 5840" |
| 7038 | 1618764.40 | 2847603.55 | 9254.91 | Found 1 1/2" alum cap "LS 5840" |
| 7040 | 1621580.37 | 2848414.59 | 9208.22 | Found 1 1/2" alum cap "PLS 30091" |
| 7044 | 1621412.67 | 2848203.15 | 9211.89 | Found #4 rebar |
| 7045 | 1621282.52 | 2848181.18 | 9212.12 | Found 1 1/4" red plastic cap "LS 9939" |
| 7046 | 1621474.69 | 2847942.46 | 9241.73 | Found 1 1/4" red plastic cap "LS 9939" |
| 7047 | 1619979.58 | 2848070.54 | 9235.50 | Found #5 rebar |

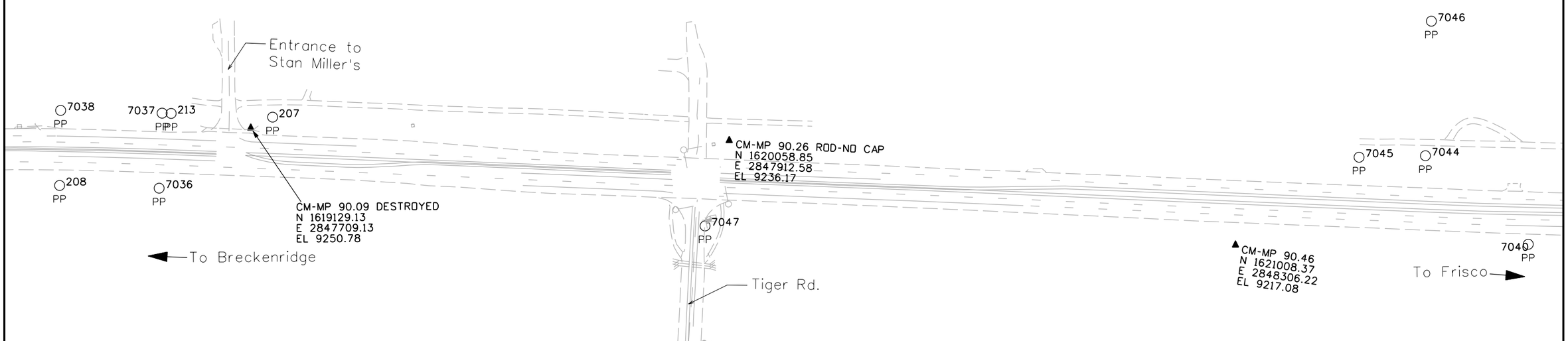

Colorado Department of Transportation
18500 East Colfax Avenue
Aurora, CO 80011
Phone: 303-757-9744 FAX: 303-757-9746
Region 1 JPC

| Sheet Revisions | | |
|---|---|---|
| Date | Description | Initials |
| mm/yy | XXXXXXXX | XXX |
| | | |
| | | |
| | | |
| | | |
| | | |
| | | |

Sec. 31 of T5S, R77W
Sec. 6, 7, 18, 19, 30 of T6S, R77W
SUMMIT COUNTY, COLORADO

| Land Survey Control Diagram | | | | |
|---|---|---|---|---|
| Plan Sheet | | | | |
| Project Number: STA 009A-024 | | | | |
| Project Location: SH 9-Valley Brook to Swan Mtn. Rd. | | | | |
| Project Location: M.P. 87.92 to M.P. 93.52 | | | | |
| Project Code: | Last Mod. Date | Subset Sheets | Sheet No. | Total No. of Sheets |
| 14927 | 06-21-06 | 6 of 10 | 3G | |

| Point # | Northing | Easting | Elevation | Description |
|---|---|---|---|---|
| 7041 | 1622099.78 | 2848806.55 | 9198.99 | Found 2 1/2" alum cap "PE-PLS 25620" |
| 7042 | 1622099.24 | 2848810.95 | 9198.52 | Found 1 1/4" blue plastic cap "LS 2783" |
| 7043 | 1621714.50 | 2848274.11 | 9207.30 | Found #4 rebar |
| 7048 | 1622801.30 | 2848396.87 | 9192.57 | Found original stone "Cor. 19 MS 1150" |
| 7049 | 1622773.59 | 2848440.34 | 9184.55 | Found 1 1/4" red plastic cap "not legible" |
| 7050 | 1622238.61 | 2848377.90 | 9192.90 | Found 1 1/4" red plastic cap "not legible" |
| 7051 | 1622494.03 | 2848105.53 | 9205.83 | Found original stone "Cor. 18 MS 1150" |
| 7052 | 1622101.10 | 2848809.28 | 9198.87 | Found 2 1/2" diam iron pipe |
| 7053 | 1621856.73 | 2848486.18 | 9202.96 | Found survey nail |
| 7054 | 1622001.92 | 2848491.08 | 9200.13 | Found survey nail |
| 7055 | 1622221.54 | 2848524.78 | 9192.89 | Found survey nail |
| 7056 | 1623467.85 | 2848506.89 | 9179.36 | Found 1 1/2" yellow plastic cap "not legible" |
| 7057 | 1623536.01 | 2848069.07 | 9206.80 | Found 1" yellow plastic cap "PLS 10847" |
| 7058 | 1624710.12 | 2848088.85 | 9273.98 | Found 1" yellow plastic cap "PLS 10847" |
| 7059 | 1624664.03 | 2848384.34 | 9270.95 | Found 1 1/2" alum cap, "not legible" |
| 0205 | 1624628.36 | 2848791.47 | 0.00 | Found 1" yellow plastic cap, "LS 10847" |
| 0206 | 1624601.41 | 2848785.04 | 9166.84 | Found 1" yellow plastic cap, "LS 10847" |

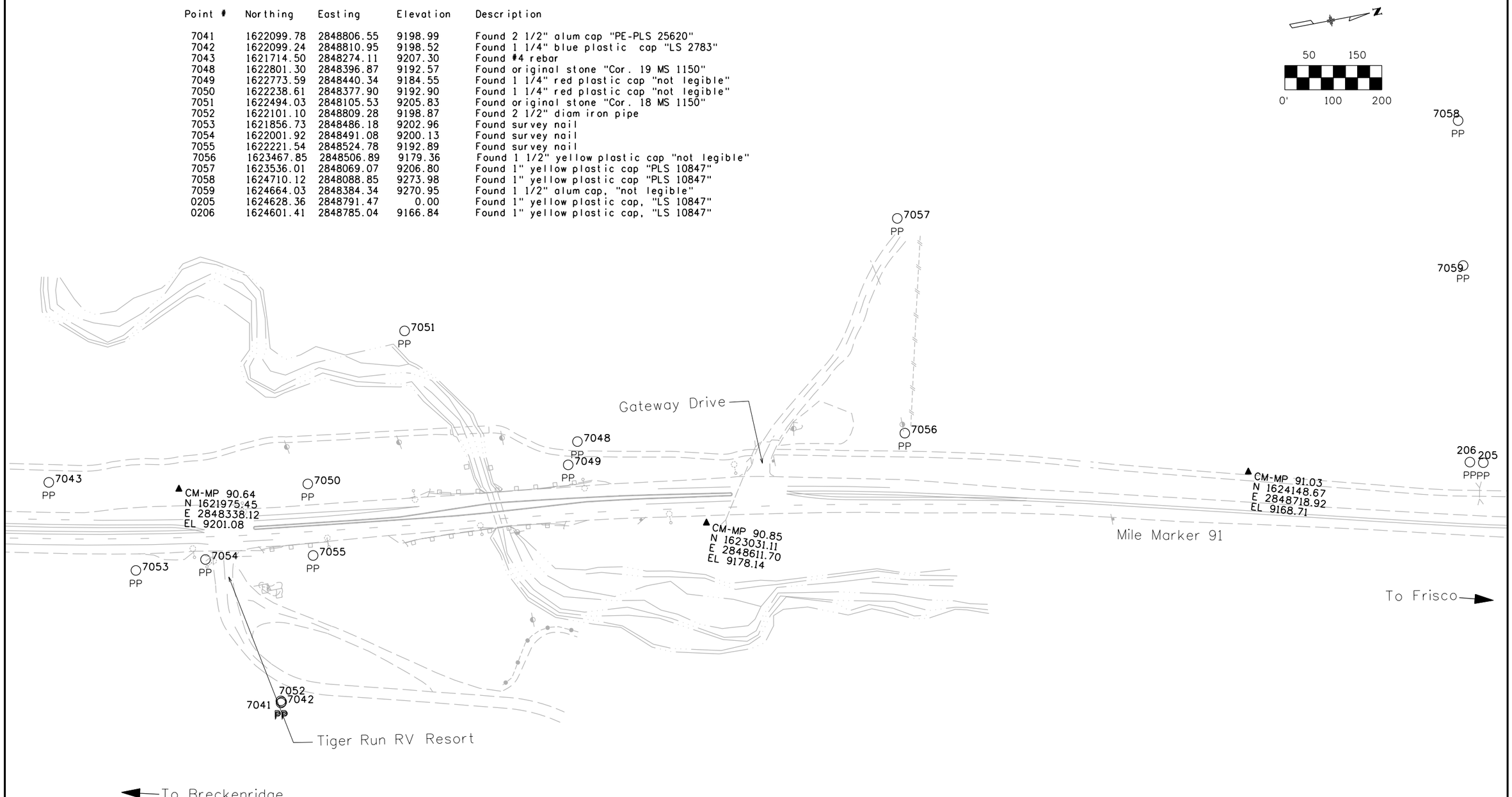

Colorado Department of Transportation
18500 East Colfax Avenue
Aurora, CO 80011
Phone: 303-757-9744 FAX: 303-757-9746
Region 1 JPC

| Sheet Revisions | | |
|---|---|---|
| Date | Description | Initials |
| mm/yy | XXXXXXXX | XXX |
| | | |
| | | |
| | | |
| | | |
| | | |
| | | |

Sec. 31 of T5S, R77W
Sec. 6, 7, 18, 19, 30 of T6S, R77W
SUMMIT COUNTY, COLORADO

# Land Survey Control Diagram
## Plan Sheet

Project Number: STA 009A-024
Project Location: SH 9-Valley Brook to Swan Mtn. Rd.
Project Location: M.P. 87.92 to M.P. 93.52

| Project Code: | Last Mod. Date | Subset Sheets | Sheet No. | Total No. of Sheets |
|---|---|---|---|---|
| 14927 | 06-21-06 | 7 of 10 | 3H | |

| Point # | Northing | Easting | Elevation | Description |
|---|---|---|---|---|
| 0011 | 1626792.86 | 2848767.55 | 0.0000 | Found 3 1/4" brass cap "1/4 Sec 6-7" |
| 0196 | 1627435.14 | 2847935.02 | 0.00 | Found #4 rebar |
| 0197 | 1626799.70 | 2848239.71 | 0.00 | Found 1 1/4" red plastic cap, "LS 9939" |
| 0198 | 1626721.65 | 2848295.51 | 0.00 | Found 1 1/4" red plastic cap, "LS 9939" |
| 0199 | 1626694.32 | 2848299.18 | 0.00 | Found 2" alum cap, "RM to Cor. 2 MS 13719" |
| 0200 | 1626795.83 | 2848420.09 | 0.00 | Found #5 rebar |
| 0201 | 1626475.97 | 2848674.26 | 0.00 | Found 1" yellow plastic cap, "RLS 10847" |
| 0202 | 1625544.15 | 2849042.24 | 0.00 | Found 1 1/4" red plastic cap, "LS 9939" |
| 0203 | 1625284.22 | 2849083.54 | 9150.08 | Found 1 1/4" red plastic cap, "LS 9939" |
| 0204 | 1624978.57 | 2849069.08 | 9153.88 | Found 1" yellow plastic cap,"LS 25640" |
| 0205 | 1624628.36 | 2848791.47 | 0.00 | Found 1" yellow plastic cap,"LS 10847" |
| 0206 | 1624601.41 | 2848785.04 | 9166.84 | Found 1" yellow plastic cap,"LS 10847" |
| 7058 | 1624710.12 | 2848088.85 | 9273.98 | Found 1" yellow plastic cap "PLS 10847" |
| 7059 | 1624664.03 | 2848384.34 | 9270.95 | Found 1 1/2" alum cap, "not legible" |
| 7060 | 1625111.02 | 2849175.19 | 9150.36 | Found 2 1/2" iron pipe |
| 7068 | 1624973.95 | 2848633.65 | 9250.25 | Found 1" yellow plastic cap, "LS 10847" |
| 7069 | 1625680.17 | 2848559.86 | 9223.99 | Found 1 1/4" red plastic cap, "not legible" |
| 7070 | 1625772.62 | 2848611.88 | 9211.55 | Found 1 1/4" red plastic cap, "LS 9939" |
| 7071 | 1624868.09 | 2848826.40 | 9171.52 | Found 1" yellow plastic cap, "LS 10847" |
| 7072 | 1626370.91 | 2848327.13 | 9185.55 | Found 1 1/4" red plastic cap, "LS 9939" |
| 7073 | 1626529.20 | 2849226.47 | 9127.89 | Found original stone, "Cor 6 MS 1150" |
| 7074 | 1626480.69 | 2849236.35 | 9127.66 | Found 1 1/4" yellow plastic cap, "not legible" |
| 7118 | 1626809.95 | 2847451.34 | 9191.81 | Found 3 1/4" alum cap "N 1/16 S 6-7" |

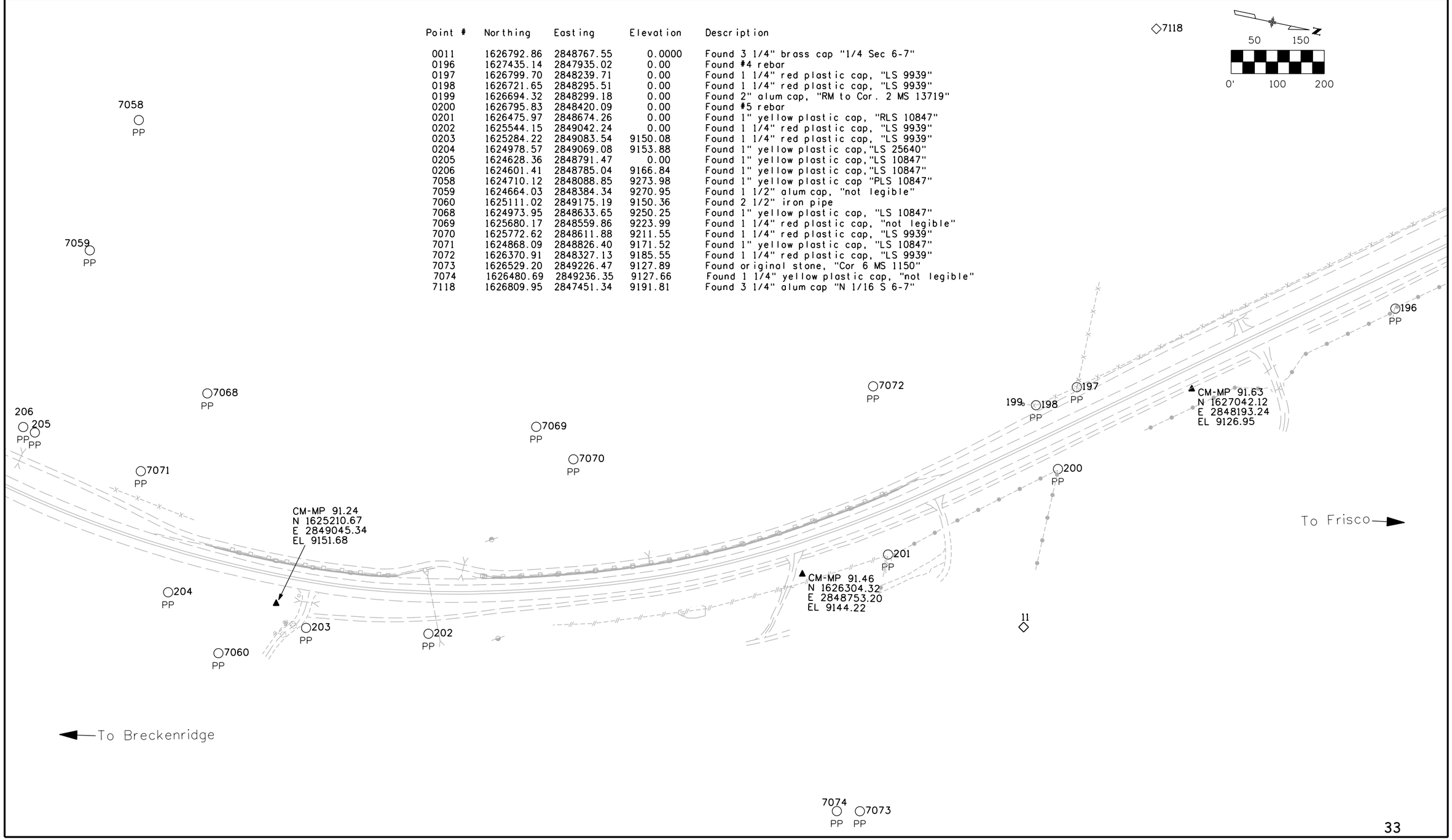

Colorado Department of Transportation
18500 East Colfax Avenue
Aurora, CO 80011
Phone: 303-757-9744 FAX: 303-757-9746
Region 1 JPC

| Sheet Revisions | | |
|---|---|---|
| Date | Description | Initials |
| mm/yy | XXXXXXXX | XXX |
| | | |
| | | |
| | | |
| | | |
| | | |
| | | |

Sec. 31 of T5S, R77W
Sec. 6, 7, 18, 19, 30 of T6S, R77W
SUMMIT COUNTY, COLORADO

# Land Survey Control Diagram
## Plan Sheet

Project Number: STA 009A-024
Project Location: SH 9-Valley Brook to Swan Mtn. Rd.
Project Location: M.P. 87.92 to M.P. 93.52

| Project Code: | Last Mod. Date | Subset Sheets | Sheet No. | Total No. of Sheets |
|---|---|---|---|---|
| 14927 | 06-21-06 | 8 of 10 | 31 | |

◇13

| Point # | Northing | Easting | Elevation | Description |
|---|---|---|---|---|
| 0013 | 1628204.28 | 2846012.47 | 0.00 | Found 3 1/4" BLM "1/16 S1-S6 T6S R78W-R77W" |
| 0014 | 1629581.32 | 2846086.05 | 0.00 | Found 3 1/4" BLM "1/4 S1-S6 T6S R78W-R77W" |
| 0188 | 1629810.85 | 2846174.27 | 0.00 | Found 1" yellow plastic cap, "RLS 10847" |
| 0189 | 1629808.34 | 2846173.61 | 0.00 | Found 1" yellow plastic cap, "PLS 20124" |
| 0190 | 1629701.00 | 2846205.66 | 0.00 | Found 1" yellow plastic cap, "RLS 10847" |
| 0191 | 1629326.02 | 2846377.42 | 0.00 | Found P-K Nail |
| 0192 | 1628884.54 | 2846709.52 | 9091.64 | Found #5 rebar |
| 0194 | 1628305.25 | 2847045.16 | 0.00 | Found 1 1/2" alum cap, CDOH ROW |
| 0195 | 1627809.58 | 2847462.07 | 0.00 | Found 1" yellow plastic cap, LS 23901 |
| 0196 | 1627435.14 | 2847935.02 | 0.00 | Found #4 rebar |
| 7062 | 1627891.55 | 2847589.13 | 9113.81 | Found #6 rebar |
| 7063 | 1628050.42 | 2847465.09 | 9111.33 | Found 1 1/4" red plastic cap "LS 9939" |
| 7064 | 1628130.51 | 2847403.06 | 9109.11 | Found 1 1/2" alum cap, "CDOH cap" |
| 7065 | 1628214.98 | 2847332.04 | 9107.80 | Found 1 1/2" alum cap, "CDOH cap" |
| 7066 | 1628340.99 | 2847467.94 | 9106.24 | Found original stone "Cor 3 MS 18461" |
| 7067 | 1628321.09 | 2847234.09 | 9103.52 | Found 1 1/2" alum cap, "CDOH cap" |
| 7089 | 1628797.97 | 2846787.82 | 9093.55 | Found 1 1/2" alum cap, "CDOH cap" |
| 7090 | 1629016.93 | 2846590.00 | 9090.32 | Found 1 1/2" alum cap, "CDOH cap" |

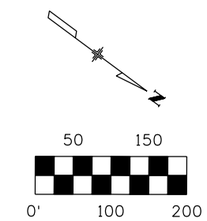


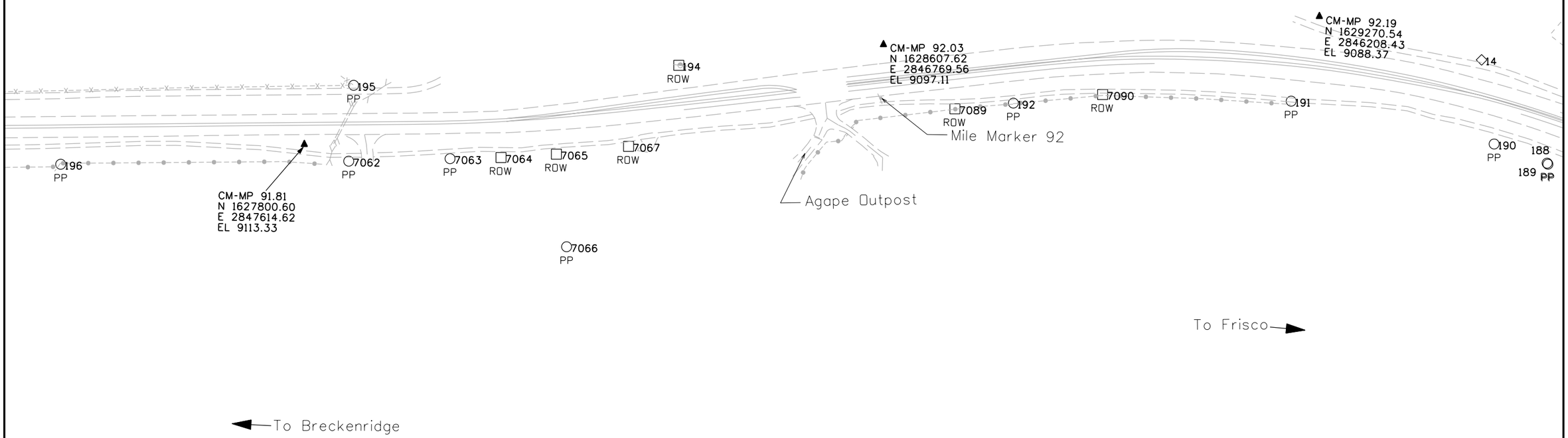

Colorado Department of Transportation
18500 East Colfax Avenue
Aurora, CO 80011
Phone: 303-757-9744 FAX: 303-757-9746
Region 1 JPC

| Sheet Revisions | | |
|---|---|---|
| Date | Description | Initials |
| mm/yy | XXXXXXXX | XXX |

Sec. 31 of T5S, R77W
Sec. 6, 7, 18, 19, 30 of T6S, R77W
SUMMIT COUNTY, COLORADO

# Land Survey Control Diagram
## Plan Sheet

Project Number: STA 009A-024
Project Location: SH 9-Valley Brook to Swan Mtn. Rd.
Project Location: M.P. 87.92 to M.P. 93.52

| Project Code: | Last Mod. Date | Subset Sheets | Sheet No. | Total No. of Sheets |
|---|---|---|---|---|
| 14927 | 06-21-06 | 9 of 10 | 3J | |

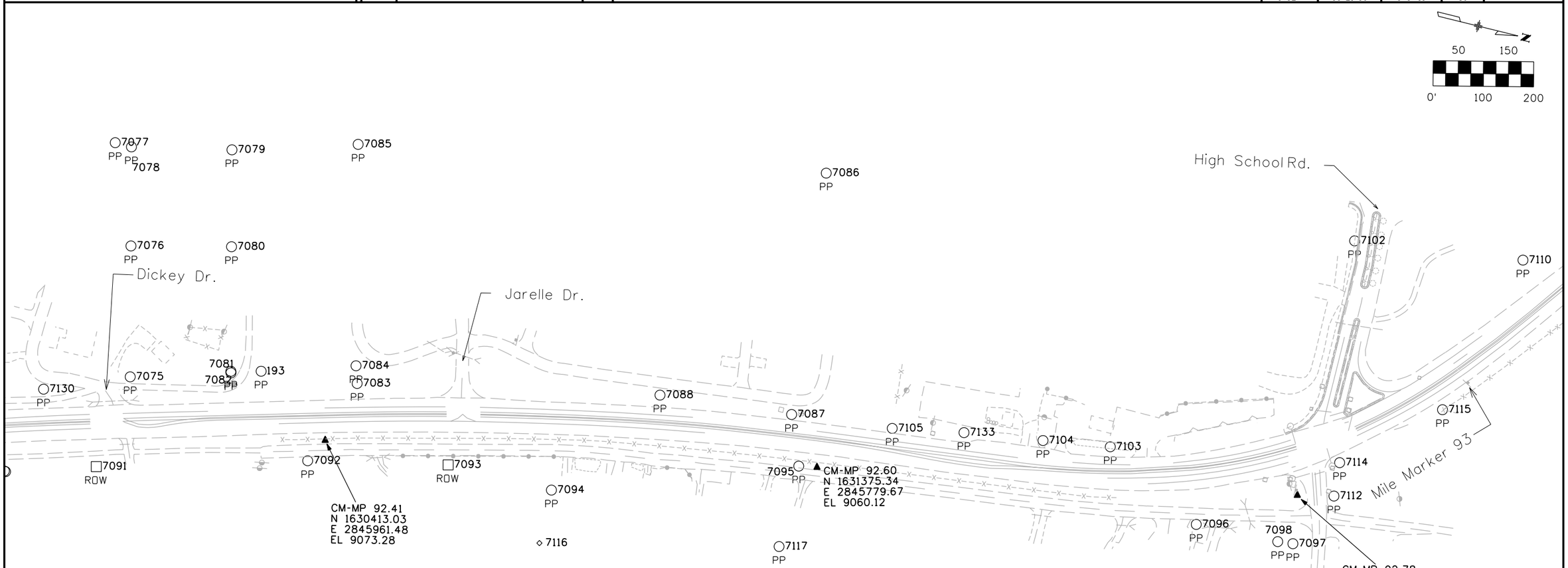


| Point # | Northing | Easting | Elevation | Description |
|---|---|---|---|---|
| 0015 | 1632298.99 | 2846026.84 | 0.00 | Found 3 1/4" BLM brass, "NE Cor. S-6 T5S R78W" |
| 0193 | 1630256.56 | 2845858.94 | 0.00 | Found 1 1/2" alum cap, "LS 27924" |
| 7075 | 1630006.46 | 2845932.00 | 9079.11 | Found 1" yellow pla "LS 10847" |
| 7076 | 1629945.65 | 2845679.21 | 9078.58 | Found metal T-Post |
| 7077 | 1629866.20 | 2845487.44 | 9078.53 | Found 1 1/2" alum cap,"LS 11944" |
| 7078 | 1629899.51 | 2845487.87 | 9077.98 | Found 1 1/2" alum cap,"not legible" |
| 7079 | 1630094.96 | 2845445.65 | 9075.94 | Found 1" yellow plastic cap, "LS 10847" |
| 7080 | 1630140.20 | 2845632.80 | 9076.21 | Found 1" yellow plastic cap, "LS 10847" |
| 7081 | 1630198.14 | 2845873.41 | 9077.95 | Found 1" yellow plastic cap, "PLS 26292" |
| 7082 | 1630199.09 | 2845876.50 | 9078.50 | Found 1 1/2" alum cap "LS 11944" |
| 7083 | 1630447.73 | 2845836.81 | 9071.60 | Found 1 1/2" pink plastic cap "not legible" |
| 7084 | 1630437.21 | 2845803.25 | 9073.43 | Found 1" yellow plastic cap, "PLS 26292" |
| 7085 | 1630335.97 | 2845375.07 | 9073.22 | Found P-K Nail |
| 7086 | 1631253.36 | 2845207.75 | 9060.12 | Found 1 1/2" alum cap "LS 27924" |
| 7087 | 1631301.24 | 2845689.96 | 9061.95 | Found 1 1/2" pink plastic cap "LS 27924" |
| 7088 | 1631037.95 | 2845715.14 | 9064.98 | Found #5 rebar |
| 7091 | 1629983.70 | 2846121.28 | 0.00 | Found 1 1/2" alum cap, "CDOH cap" |
| 7092 | 1630389.01 | 2846009.47 | 9073.37 | Found #5 rebar |
| 7093 | 1630662.10 | 2845950.67 | 9070.10 | Found 1 1/2" alum cap, "CDOH cap" |
| 7094 | 1630873.52 | 2845950.08 | 9065.94 | Found 1" yellow plastic cap "not legible" |

| Point # | Northing | Easting | Elevation | Description |
|---|---|---|---|---|
| 7095 | 1631339.59 | 2845786.07 | 9060.04 | Found #6 rebar |
| 7096 | 1632134.77 | 2845709.41 | 9050.31 | Found #5 rebar |
| 7097 | 1632330.54 | 2845700.59 | 9048.01 | Found 2" alum cap "PLS 15242" |
| 7098 | 1632300.29 | 2845703.80 | 9049.51 | Found 2" alum cap "PLS 15242" |
| 7099 | 1632309.17 | 2845953.08 | 9039.42 | Found 2" alum cap "Property Cor" |
| 7102 | 1632305.71 | 2845086.94 | 9047.58 | Found 2" alum cap "PLS 26292" |
| 7103 | 1631931.88 | 2845600.50 | 9053.92 | Found 2" alum cap "PLS 26292" |
| 7104 | 1631798.98 | 2845620.53 | 9053.24 | Found metal angle post |
| 7105 | 1631502.18 | 2845668.83 | 9058.44 | Found metal T-post |
| 7110 | 1632639.80 | 2845044.02 | 9042.55 | Found #5 rebar |
| 7112 | 1632387.09 | 2845589.17 | 9045.75 | Found iron spike |
| 7114 | 1632382.25 | 2845521.99 | 9050.47 | Found metal anlge post |
| 7115 | 1632555.67 | 2845370.86 | 9047.30 | Found metal T-post |
| 7116 | 1630875.57 | 2846057.93 | 9069.25 | Found 3 1/4" brass cap "N 1/16 S 1-6" |
| 7117 | 1631339.84 | 2845950.58 | 9060.35 | Found 1" yellow plastic cap, "PLS 10847" |
| 7130 | 1629845.05 | 2845997.02 | 9082.33 | Found 2 1/2" alum cap stamped "717" |
| 7135 | 1632307.92 | 2846026.64 | 9042.81 | Found 1 1/4" alum cap "LS 4974" |
| 7136 | 1632472.91 | 2846323.30 | 9041.50 | Found #5 rebar Lath reads: "Tract A ROW" |
| 7137 | 1632550.93 | 2846305.47 | 9038.60 | Found #5 rebar Stake reads: "Right of Way" |

Colorado Department of Transportation
18500 East Colfax Avenue
Aurora, CO 80011
Phone: 303-757-9744 FAX: 303-757-9746
Region 1 JPC

| Sheet Revisions | | |
|---|---|---|
| Date | Description | Initials |
| mm/yy | XXXXXXXX | XXX |
| | | |
| | | |
| | | |
| | | |
| | | |
| | | |

Sec. 31 of T5S, R77W
Sec. 6, 7, 18, 19, 30 of T6S, R77W
SUMMIT COUNTY, COLORADO

# Land Survey Control Diagram
## Plan Sheet

Project Number: STA 009A-024
Project Location: SH 9-Valley Brook to Swan Mtn. Rd.
Project Location: M.P. 87.92 to M.P. 93.52

| Project Code: | Last Mod. Date | Subset Sheets | Sheet No. | Total No. of Sheets |
|---|---|---|---|---|
| 14927 | 06-21-06 | 10 of 10 | 3K | |

| Point # | Northing | Easting | Elevation | Description |
|---|---|---|---|---|
| 0186 | 1632971.30 | 2844674.05 | 9036.91 | Found 1 1/2" alum cap, "LS 11944" |
| 0187 | 1632974.69 | 2844852.66 | 0.00 | Found 3" diam pipe |
| 7107 | 1632971.94 | 2844046.36 | 9044.37 | Found 3" brass cap "LS 16398" |
| 7109 | 1632911.75 | 2844737.04 | 9038.01 | Found #4 rebar |
| 7111 | 1633859.60 | 2844397.13 | 9039.44 | Found 3" brass cap "CDOH ROW" |
| 7113 | 1632970.81 | 2845372.94 | 9037.05 | Found 3" brass cap "LS 16398" |
| 7121 | 1633549.46 | 2844352.99 | 9029.34 | Found 2" alum cap "PLS 15242" |
| 7122 | 1633122.73 | 2844506.59 | 9033.70 | Found 2" alum cap "PLS 15242" |
| 7138 | 1633833.02 | 2844513.70 | 9034.04 | Found 3 1/4" brass cap "CDOH ROW" |

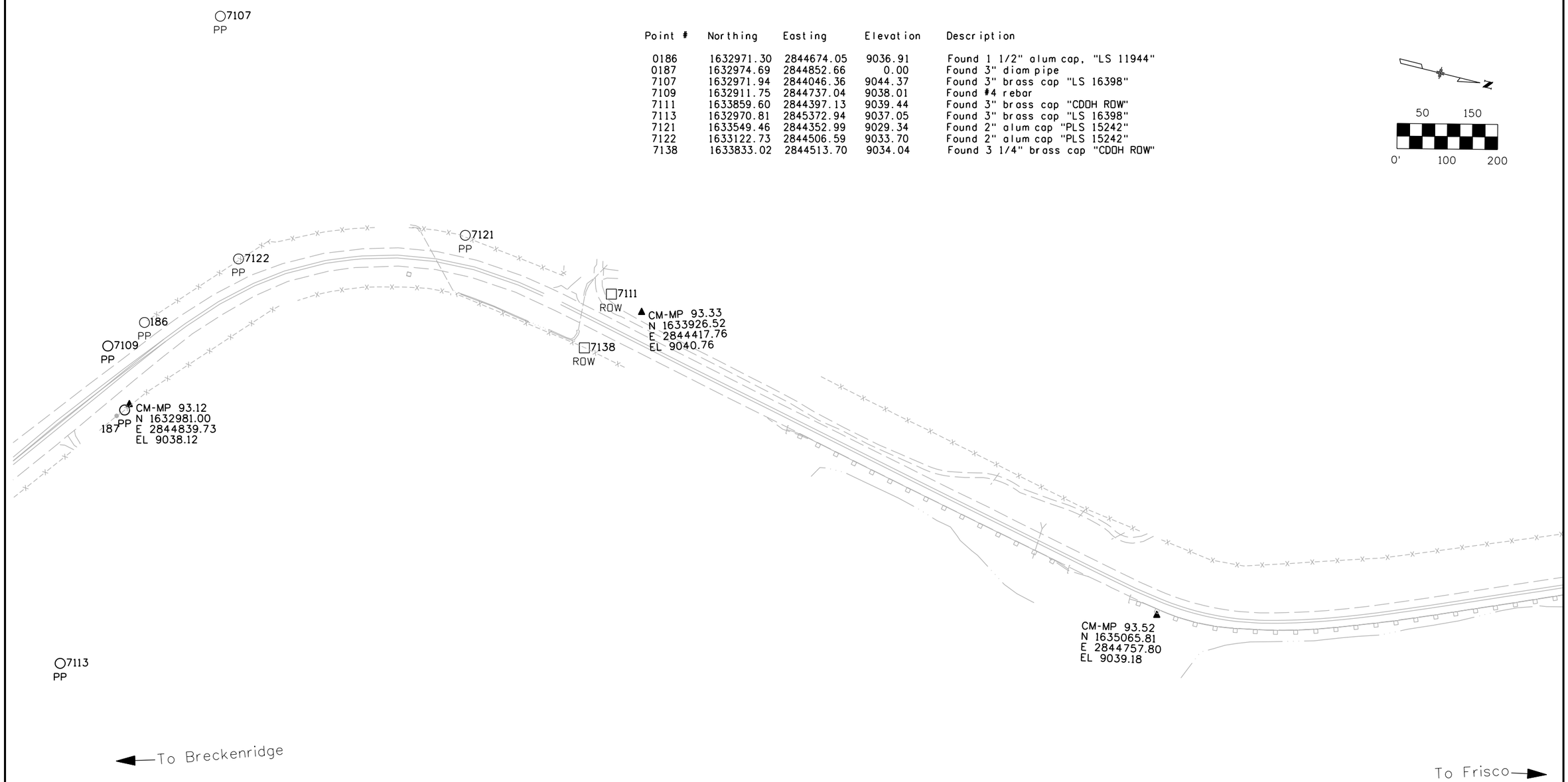

## TO ESTABLISH GEOMETRIC CONTROL FOR THE CONSTRUCTION OF THIS PROJECT, THE DEPARTMENT HAS PROVIDED THE FOLLOWING INFORMATION:

- ■ Horizontal Control — Plans
- ■ Vertical Control — Plans
- ■ Roadway Alignment — Plans
- ■ Original Terrain Data — Computer Disk
- ☐ Other: _____

* Specify the information format, ie., plan sheet, computer disk, computer printout, or other. The information marked is either contained on the plans or is available from the Engineer.

TYPE OF PROJECT

- ☐ Landscaping
- ☐ Signalization
- ☐ Safety Improvement
- ☐ Asphalt Overlay
- ☐ Concrete Overlay
- ☐ Minor Widening
- ■ Major Reconstruction
- ☐ New Roadway Construction
- ☐ Bridge Replacement
- ☐ Bridge Widening
- ■ New Bridge
- ☐ Other: _____

SURVEY WORK TO BE PERFORMED BY OTHERS: _____

## WORK PERFORMED BY THE CONTRACTOR'S SURVEYOR UNDER SECTION 625:

- ___ ■ Establish and Maintain Project Centerline or Engineer Approved Offset Line(s)
- ___ ■ Verification and Maintenance of Horizontal and Vertical Control
- ___ ■ Verify or Determine existing grades and alignments
- ___ ■ Verify or Determine existing topography
- ___ ■ Clearing and Grubbing Limits (Section 201)
- ___ ■ Removal Limits (Section 202)
- ___ ■ Reset Items (Section 210)
- ___ ■ Excavation and Embankment (Section 203)
  - ___ ■ Excavation
    - ___ ■ Unclassified
    - ___ ☐ Stripping
    - ___ ☐ Muck
    - ___ ☐ Rock
    - ___ ☐ Borrow
    - ___ ☐ Other: _____
    - ___ ☐ Potholing
  - ___ ■ Embankment
  - ___ ☐ Site Grading
  - ___ ☐ Erosion Control (Perm)
  - ___ ■ Other: Water Quality Pond
  - ___ ■ As Staked Earthwork Quantities (See General Notes)

| | Slope Staking (Y/N) | Grid (Y/N) | Grade Stakes | Special Interval |
|---|---|---|---|---|
| Excavation | Yes | - | 50' | 25' |
| | - | - | - | - |
| | - | - | - | - |
| | - | - | - | - |
| | - | - | - | - |
| | - | - | - | - |
| Embankment | - | - | - | - |
| | - | - | - | - |
| | - | - | - | - |
| | - | Yes | - | 25' |

- ___ ■ Landscaping
  - ___ ■ Top Soil (Section 207)
  - ___ ■ Seeding (Section 212)
  - ___ ■ Mulching (Section 213)
  - ___ ☐ Planting (Section 214)
  - ___ ☐ Herbicide (Section 217)
  - ___ ☐ Other: _____
- ___ ■ Erosion Control (Section 208)
  - ___ ☐ Seeding (Temp)
  - ___ ☐ Silt Fence
  - ___ ■ Erosion Bales
  - ___ ☐ Erosion Logs
  - ___ ☐ Riprap (Temp)
  - ___ ■ Other: Temp. Diversion, Check Dam
- ___ ■ Roadway Bases
  - ___ ■ Untreated Subgrade
  - ___ ☐ Treated Subgrade
  - ___ ■ Aggregate Base Course (Section 304)
  - ___ ☐ Reconditioning
  - ___ ☐ PMBB - Plant Mix Bituminous Base
  - ___ ☐ Other: _____

| | Grid (Y/N) | Grade (Y/N) | Special Interval | Special Offset |
|---|---|---|---|---|
| Roadway Bases | - | - | - | - |
| | - | - | - | - |
| | - | - | - | - |
| | - | - | - | - |
| | - | - | - | - |
| | - | - | - | - |

- ___ ■ Pavements
  - ___ ■ HMA - Hot Mix Asphalt (Section 403)
  - ___ ☐ Concrete (Section 412)
  - ___ ☐ Heating & Scarifying Treatment
  - ___ ☐ Prime Coat, Tack Coat & Rejuvenating Agent (Section 407)
  - ___ ☐ Seal Coat or Chip Seal (Section 409)
  - ___ ■ Other: Shared Use Path

| | Grid (Y/N) | Special Interval | Special Offset |
|---|---|---|---|
| Pavements | - | - | - |
| | - | - | - |
| | - | - | - |
| | - | - | - |
| | - | - | - |
| | - | - | - |

- ___ ■ Roadway Elements
  - ___ ■ Curb and Gutter (Section 609)
  - ___ ■ Drop inlets - alignment and grades (Section 604)
  - ___ ☐ Retaining Walls
  - ___ ■ Guard Rail (Section 606)
  - ___ ☐ Sidewalk (Section 608)
  - ___ ■ Overlay Stationing
  - ___ ■ Other: Shared Use Path

| | Tangent Interval | Curve Interval | Special Offset |
|---|---|---|---|
| Curb & Gutter | - | - | - |

| | Left Interval | Center Interval | Right Interval |
|---|---|---|---|
| Stationing | - | - | - |

- ___ ☐ Riprap (Perm) (Section 506)
- ___ ☐ Slope and Ditch Paving (Section 507)
- ___ ■ Minor Structures
  - ___ ■ Structure Excavation limits (Section 206)
  - ___ ■ Culverts (Section 603)
  - ___ ☐ Culverts w/ Headwalls and Wingwalls (Section 601)
  - ___ ☐ Concrete Box Culverts w/ Headwalls and Wingwalls
  - ___ ■ Pipes (Section 603)
    - ___ ☐ Sanitary Sewer
    - ___ ■ Storm Sewer
    - ___ ☐ Water
    - ___ ☐ Irrigation
    - ___ ☐ Miscellaneous
  - ___ ■ Manholes (Section 604)
  - ___ ■ Inlets (Section 604)
  - ___ ☐ Other: _____
- ___ ■ Major Structures - Overhead Signs (Section 614), Concrete Box Culverts, Bridges - and all other structures assigned a structure number
  - ___ ■ Structure Excavation limits (Section 206)
  - ___ ☐ Concrete Box Culverts (Section 603) w/ Headwalls and Wingwalls (Section 601)
  - ___ ■ Piling locations and cut off elevations (Section 502)
  - ___ ☐ Caisson locations and elevations (Section 503)
  - ___ ■ Footing locations, alignment, and elevations
  - ___ ■ Abutment/Pier locations, alignment, and elevations
  - ___ ■ Wingwall skew angles/offsets
  - ___ ■ Structural concrete form locations
  - ___ ■ Substructure As-constructed survey required for Bridges (Subsection 601 .12) and Overhead signs (S-614-50)
  - ___ ☐ Bridge expansion joint(s) alignment and grade (longitudinal and transverse)
  - ___ ■ Deck grades at Girder 10th or "n" th point locations and elevations
  - ___ ■ Slope and Ditch Paving (Section 507)
  - ___ ■ Other: Shoring
- ___ ■ Fencing (Section 607)
  - ___ ☐ Temporary
  - ___ ■ Permanent
  - ___ ☐ Sound Barrier
  - ___ ☐ Other: _____
- ___ ■ Delineators (Section 612)
  - ___ ☐ Temporary
  - ___ ■ Permanent
- ___ ■ Lighting (Section 613) and Traffic Control Devices (Permanent) (Section 614)
  - ___ ■ Signal pole locations and elevations
  - ___ ■ Light pole locations and elevations
  - ___ ■ Sign locations
  - ___ ■ Field verify sign post locations, elevations, and lengths before fabrication.
  - ___ ■ Other: Caissons locations and elevations, As Constructed survey of electrical conduit at the end points and at access crossings.
- ___ ■ Pavement Marking (Section 627)
  - ___ ☐ Striping (Temp)
  - ___ ■ Striping (Perm)
  - ___ ■ Symbols
  - ___ ■ Other: Words
- ___ ■ Temporary Lighting and Construction Traffic Control Devices (Section 630)
  - ___ ☐ Signal pole locations and elevations (Temp)
  - ___ ☐ Light pole locations and elevations (Temp)
  - ___ ■ Sign Locations (Temp)
  - ___ ☐ Other: _____
- ___ ■ Easements (Temp Staking by P.L.S. Only)
- ___ ■ Right of Way (Temp Staking by P.L.S. Only)

## WORK PERFORMED BY THE CONTRACTOR'S SURVEYOR UNDER SECTION 629:

- ___ ■ Monumentation (Section 629) See the construction "General Notes".
  - ___ ■ Control
  - ___ ■ Right of Way
  - ___ ■ Land corners, Aliquot corners
  - ___ ■ Easements
  - ___ ☐ Reference the specified existing monuments: ** _____
  - ___ ☐ Replace the specified existing monuments: ** _____
  - ___ ☐ Locate monuments. It is estimated ___ hours are required.

NOTE: All 629 items shall include adequate research, calculations, and evaluations of evidence for monuments to be set.

** A Tabulation of Survey Monuments may be provided on the plans.

## GENERAL NOTES:

1. Unless indicated otherwise on this Survey Tabulation Sheet, all survey work and staking intervals shall be done in accordance with the latest edition of the CDOT Survey Manual.
2. Adequate information for establishing lines, grades, and locations for all work items have been specified on the plans. Any additional information required to stake the item or element shall be generated by the Contractor's surveyor.
3. The Contractor's surveyor shall provide an estimate of the man-hours necessary to complete the work items indicated on this sheet. A copy of this sheet, with the estimated man-hours written on the blank line to the left of the specified items, shall be submitted with the Survey Schedule to the Engineer (5) days prior to the Presurvey Conference - Construction Survey.
4. Stakes and Monuments which are damaged or destroyed by the progress of construction shall be replaced by the Contractor at no additional cost to the Department.
5. The Contractor shall furnish an As Staked earthwork quantity to the Engineer prior to completion of twenty percent (20%) of the planned earthwork in any phase as per the CDOT Survey Manual. A printed copy of the As Staked earthwork data and a computer disk in the specified format shall be submitted to the Engineer. The Contractor shall field verify original ground cross sections at a maximum 500 feet intervals.
6. Prior to beginning work on any subsequent operation, such as placing base course or paving, the Contractor shall certify in writing to the Engineer that the final grade is within specified tolerance.
7. The Contractor's surveyor shall perform all field surveying and calculations necessary to tie plan grades into field grades.
8. The Contractor shall coordinate construction staking on the project with any utility work.
9. Fieldbooks shall contain daily records of points set and or measurements observed. The information recorded shall contain: date, crew members' names, point no., description, staking information, and sketches. If the survey information is collected electronically, information recorded shall be provided to the Project Engineer in a hard copy format that is intuitive, clear and related to the supplemental information recorded in the field books. All linear surveys, such as slope stakes and blue tops, shall have the station and offset information related to the measured information. Non-linear surveys such as structures staking shall have sketches relating electronic information, such as point numbers, to the sketch.
10. The Contractor's surveyor shall submit the following fieldbooks to the Engineer:
    - ■ Horizontal Control (Primary & Secondary)
    - ■ Vertical Control (i.e. Benchmarks)
    - ■ Property Pins, Aliquot Corners, Mineral Corners, ROW Monuments
    - ■ Horizontal Alignment
    - ■ Grading
    - ■ Slope Staking
    - ■ Minor Structures
    - ■ Major Structures
    - ■ One fieldbook for each work category shown on this sheet
    - ■ Other Fieldbook(s): Fencing and Caissons

| | |
|---|---|
| Print Date: 8/4/2008 | |
| File Name: 16439SURV_Tab.dgn | |
| Horiz. Scale: 1:1 | Vert. Scale: As Noted |
| Region 1 Survey | Dave Stewart (DAS) |

R-X

Sheet Revisions

| Date: | Comments | Init. |
|---|---|---|
| | | |
| | | |
| | | |
| | | |

Colorado Department of Transportation
DOT — DEPARTMENT OF TRANSPORTATION
Mountain Residency P.O. Box 399
Dumont, CO 80436
Phone: 303-512-5750 FAX: 303-512-5775
Region 1 David C. Wieder DCW

As Constructed
No Revisions:
Revised:
Void:

SURVEY TABULATION SHEET

| | | | |
|---|---|---|---|
| Designer: Tim Tuttle | Structure Numbers | F-12-BW | |
| Detailer: Dave Stewart | | | |
| Sheet Subset: | Subset Sheets: | 1 of 1 | |

Project No./Code
STA 0091-035
16439
Sheet Number 37

claybrookb 9:49:12 AM C:\Projects\16439\SurveyTabulationSheet\16439SURV_Tab.dgn

NOTES:
SEE ROADWAY PLANS FOR ACCESS GEOMETRY.

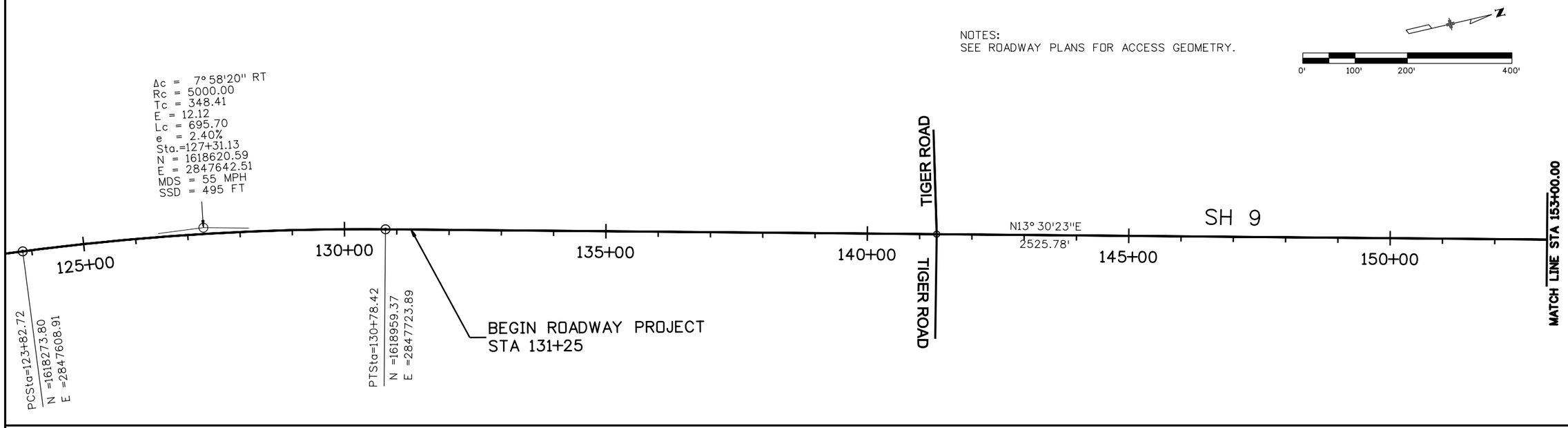


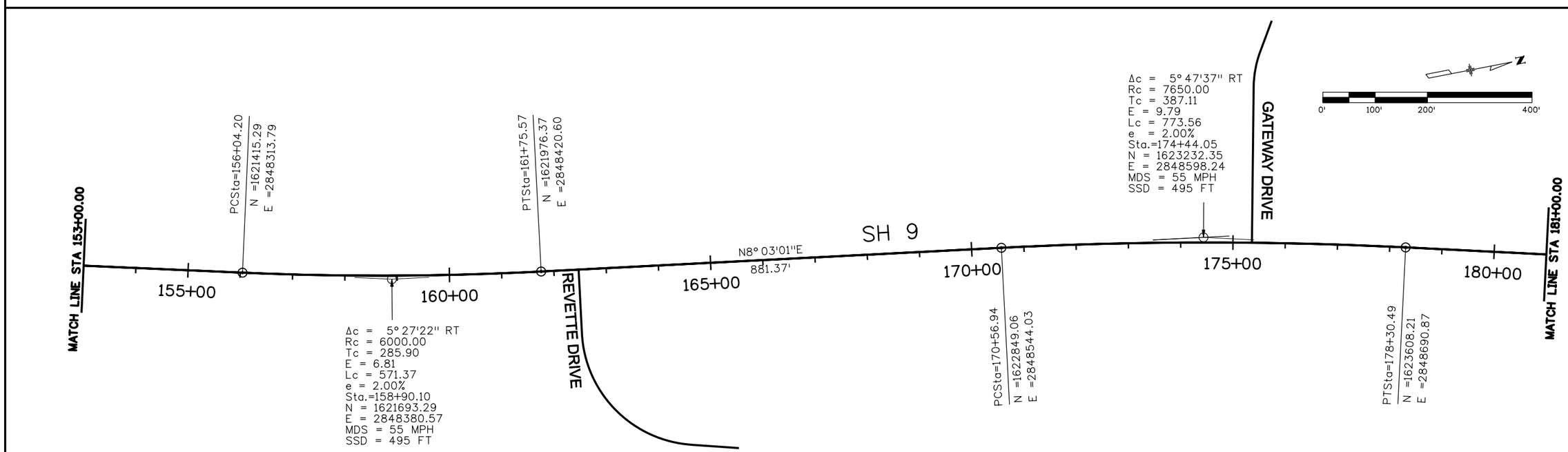


| | | | |
|---|---|---|---|
| Print Date: 8/29/2008 | | | |
| File Name: 16439Geometry_Plan1.dgn | | | |
| Horiz. Scale: 1:200 | Vert. Scale: As Noted | R-X | |
| Unit Information | Unit Leader Initials | | |

**Sheet Revisions**

| Date: | Comments | Init. |
|---|---|---|
| | | |
| | | |
| | | |
| | | |

Colorado Department of Transportation
DOT
DEPARTMENT OF TRANSPORTATION
Mountain Residency P.O. Box 399
Dumont, CO 80436
Phone: 303-512-5750 FAX: 303-512-5775
Region 1 DCW

As Constructed
No Revisions:
Revised:
Void:

SH 9
GEOMETRIC LAYOUT

| | | | |
|---|---|---|---|
| Designer: | TJT | Structure Numbers | |
| Detailer: | TJT | | |
| Sheet Subset: GEOMETRY | | Subset Sheets: | 1 OF 3 |

Project No./Code
STA 0091-035
16439
Sheet Number 38

tuttlet 3:45:05 PM C:\Projects\16439\Design\Drawings\16439Geometry_Plan1.dgn

NOTES:
SEE ROADWAY PLANS FOR ACCESS GEOMETRY.

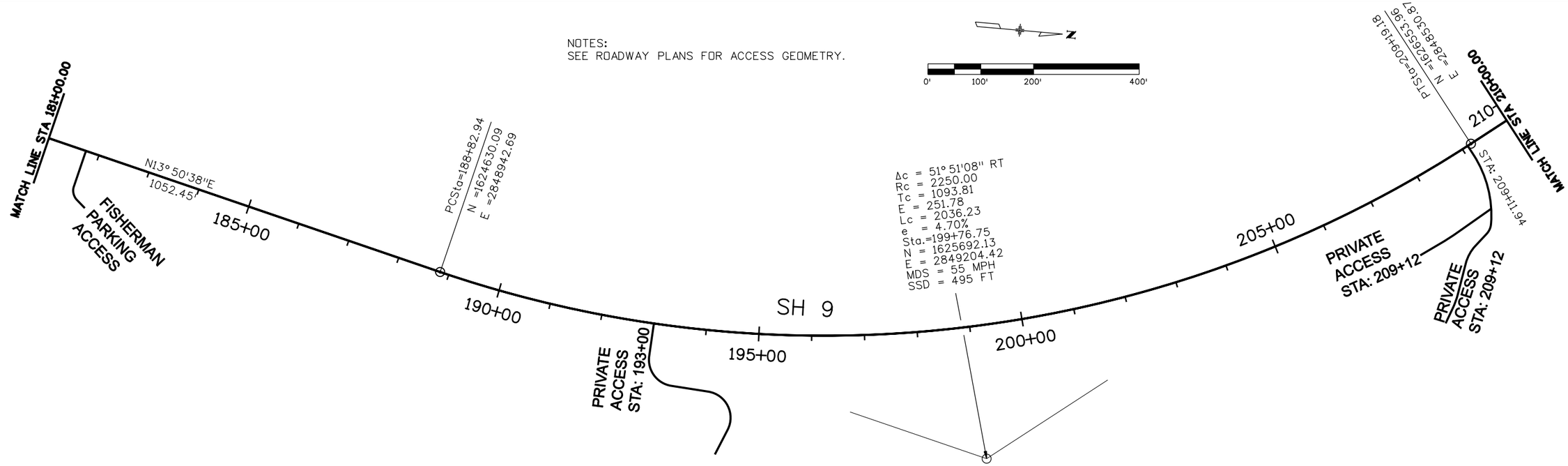


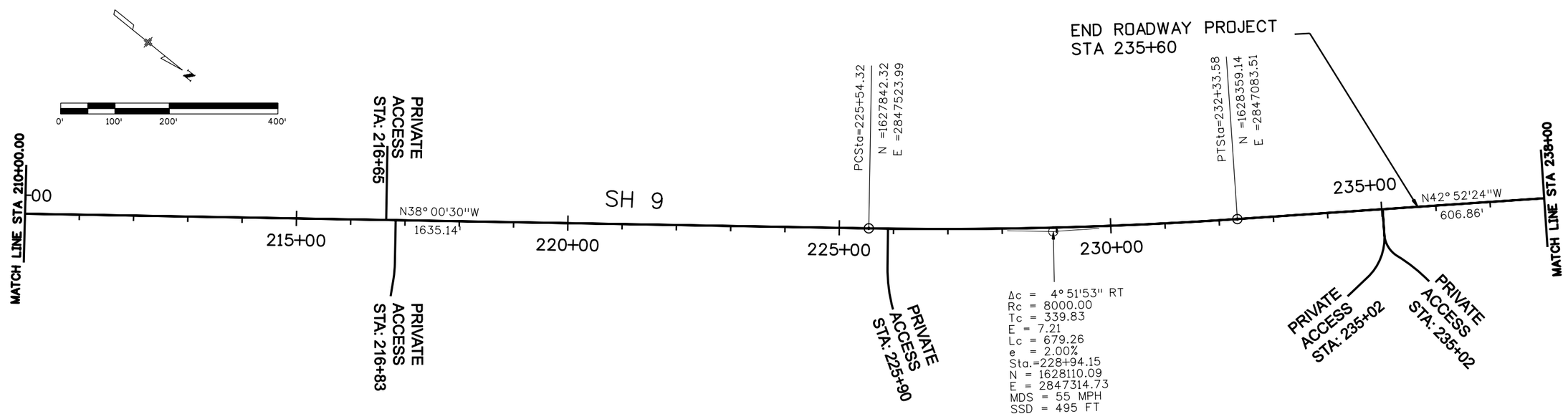


| | | | |
|---|---|---|---|
| Print Date: 1/14/2009 | Sheet Revisions | Colorado Department of Transportation | As Constructed |
| File Name: 16439Geometry_Plan2.dgn | Date: / Comments / Init. | DOT — Mountain Residency P.O. Box 399, Dumont, CO 80436, Phone: 303-512-5750 FAX: 303-512-5775 | No Revisions: |
| Horiz. Scale: 1:200 Vert. Scale: As Noted | R-X | Region 1 DCW | Revised: |
| Unit Information Unit Leader Initials | | | Void: |

| | | | |
|---|---|---|---|
| SH 9 GEOMETRIC LAYOUT | | | Project No./Code |
| Designer: TJT | Structure Numbers | | STA 0091-035 |
| Detailer: TJT | | | 16439 |
| Sheet Subset: GEOMETRY | Subset Sheets: 2 OF 3 | | Sheet Number 39 |

tuttlet 3:29:37 PM C:\Projects\16439\Design\Drawings\16439Geometry_Plan2.dgn

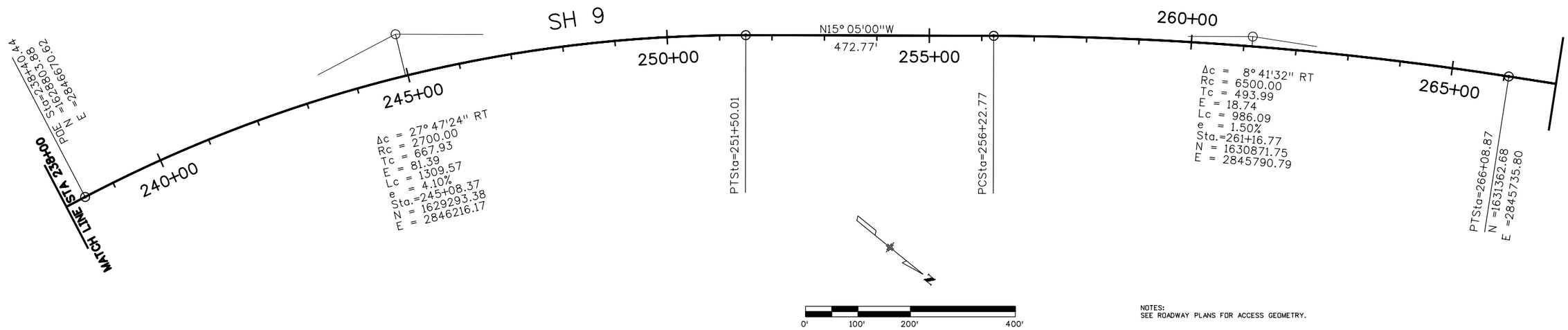


NOTES:
SEE ROADWAY PLANS FOR ACCESS GEOMETRY.

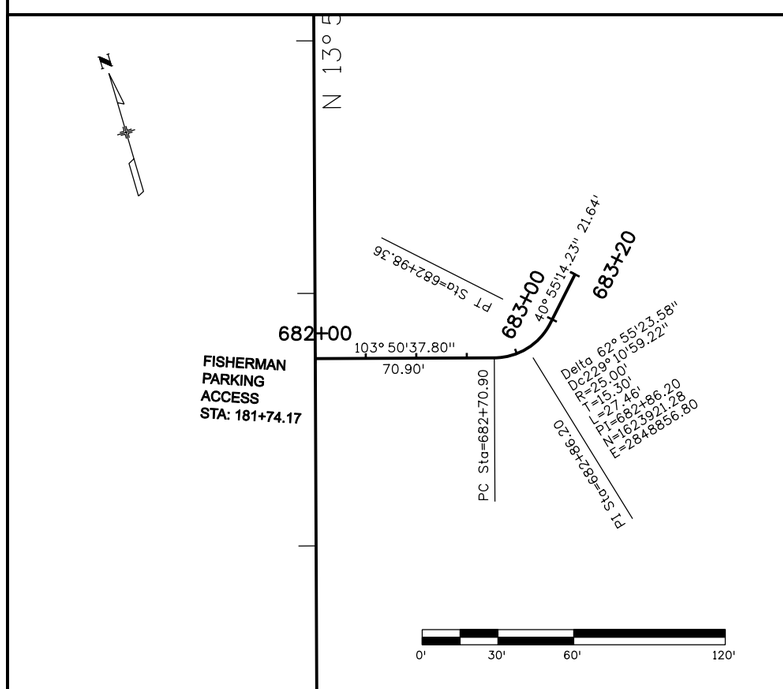


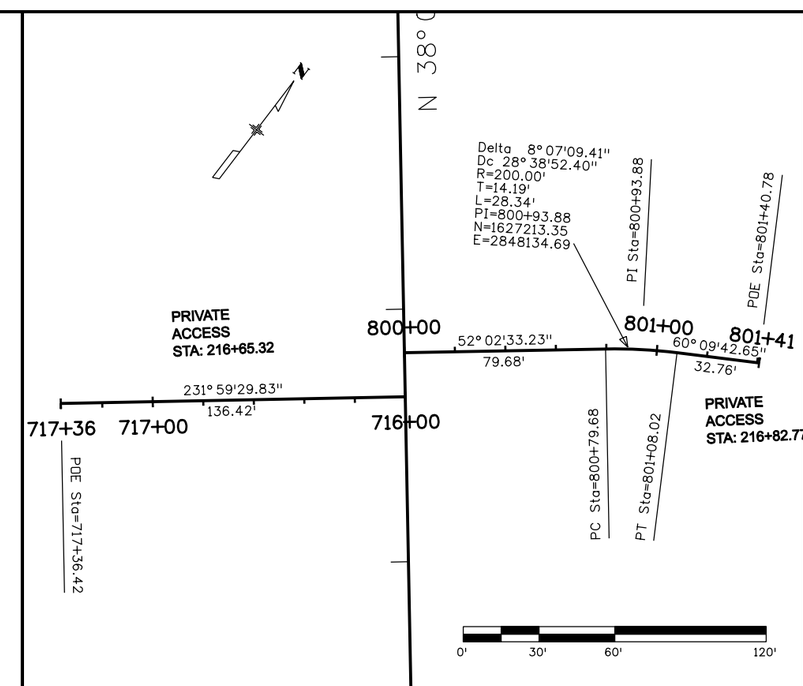


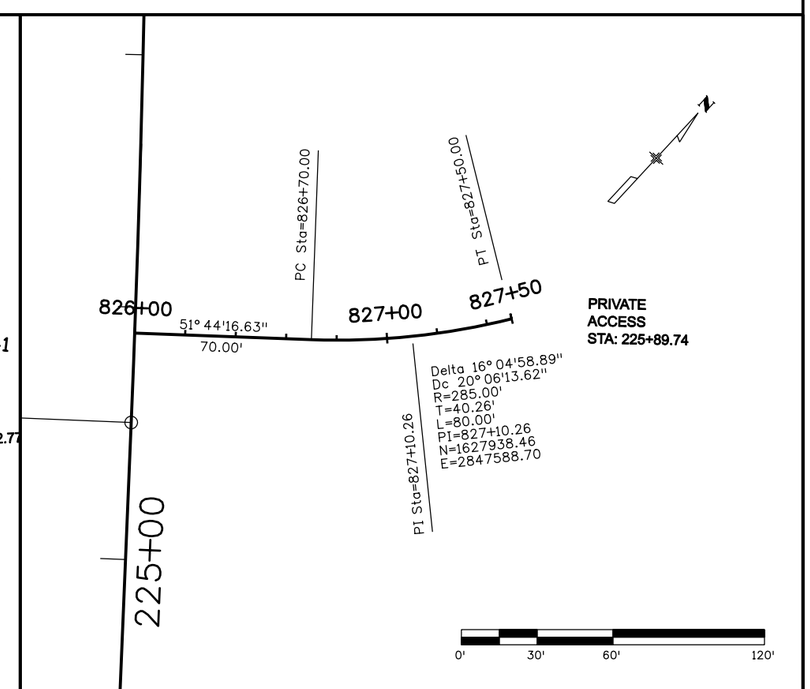


| | | | |
|---|---|---|---|
| Print Date: 8/29/2008 | | Sheet Revisions | |
| File Name: 16439Geometry_Plan3.dgn | | Date: | Comments | Init. |
| Horiz. Scale: 1:200 | Vert. Scale: As Noted | | | |
| Unit Information | Unit Leader Initials | | | |

R-X

Colorado Department of Transportation
DOT DEPARTMENT OF TRANSPORTATION
Mountain Residency P.O. Box 399
Dumont, CO 80436
Phone: 303-512-5750 FAX: 303-512-5775
Region 1 DCW

As Constructed
No Revisions:
Revised:
Void:

SH 9
GEOMETRIC LAYOUT

| | | | |
|---|---|---|---|
| Designer: | TJT | Structure Numbers | |
| Detailer: | TJT | | |
| Sheet Subset: GEOMETRY | | Subset Sheets: | 3 OF 3 |

Project No./Code
STA 0091-035
16439
Sheet Number 40

tuttlet 3:46:24 PM C:\Projects\16439\Design\Drawings\16439Geometry_Plan3.dgn

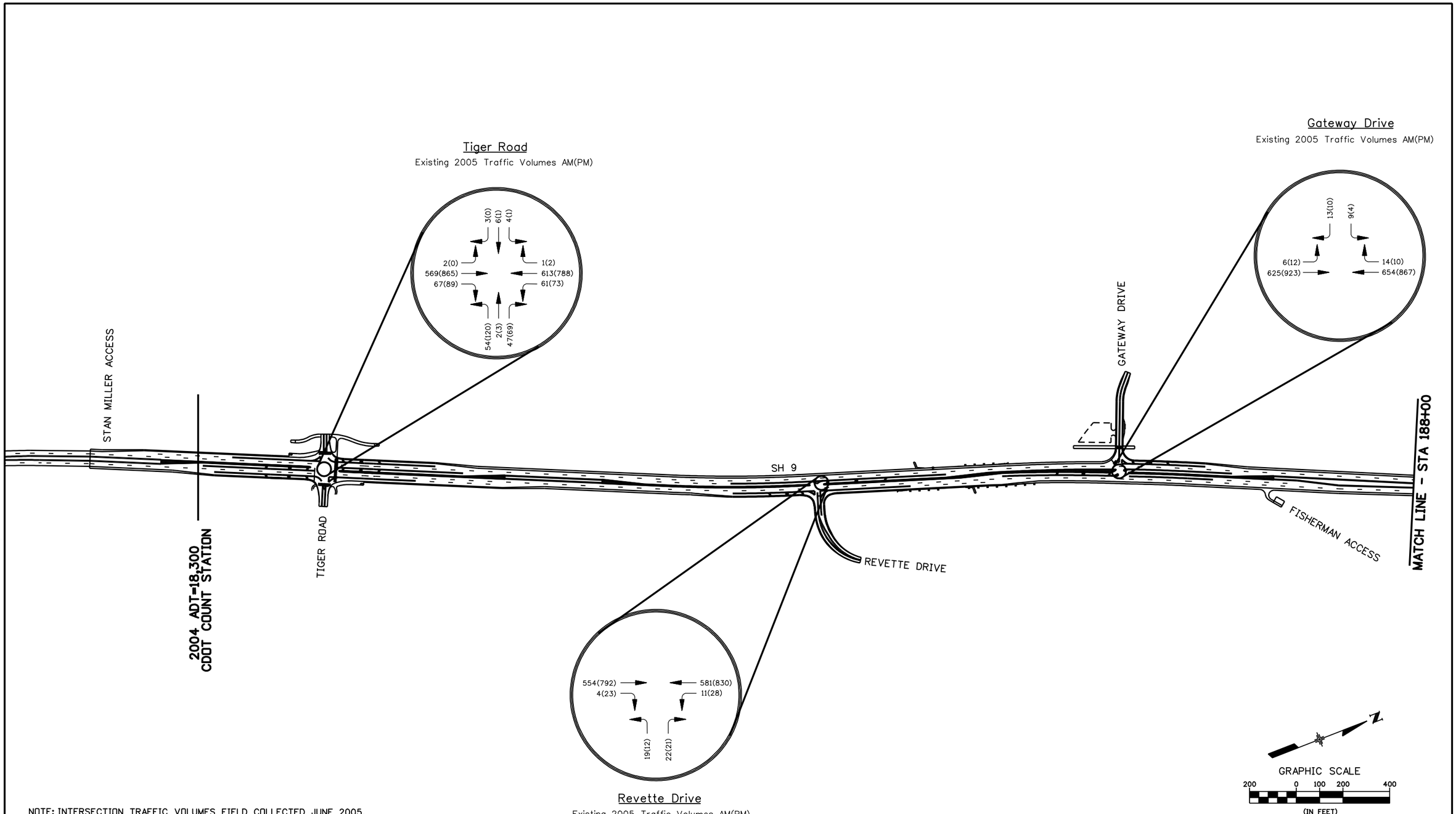


NOTE: INTERSECTION TRAFFIC VOLUMES FIELD COLLECTED JUNE 2005.

21698 8:51:33 AM S:\Tranproj\246220-05\14927\Consultants\Plot_Sets\SHELF\16439TrafficVolumes01.dgn

| | | | |
|---|---|---|---|
| Print Date: 1/26/2009 | Sheet Revisions | Colorado Department of Transportation | As Constructed |
| File Name: 16439TrafficVolumes01.dgn | Date: / Comments / Init. | DOT Department of Transportation | No Revisions: |
| Horiz. Scale: 1:400 Vert. Scale: As Noted | | Mountain Residency P.O. Box 399<br>Dumont, CO 80436<br>Phone: 303-512-5750 FAX: 303-512-5775 | Revised: |
| Unit Information Unit Leader Initials | | Region 1 DCW | Void: |
| PBSJ 4601 DTC Boulevard, Suite 700<br>Denver, CO 80237<br>Phone: (303) 221-7275 Fax: (303) 221-7276 | | | |

| TRAFFIC VOLUMES (FOR INFORMATION ONLY) | | | | Project No./Code |
|---|---|---|---|---|
| Designer: | SLZ | Structure Numbers | | STA 0091-035 |
| Detailer: | SLZ | | | 16439 |
| Sheet Subset: | TRAFFIC | Subset Sheets: | 1 of 2 | Sheet Number 41 |

NOTE: INTERSECTION TRAFFIC VOLUMES FIELD COLLECTED JUNE 2005.

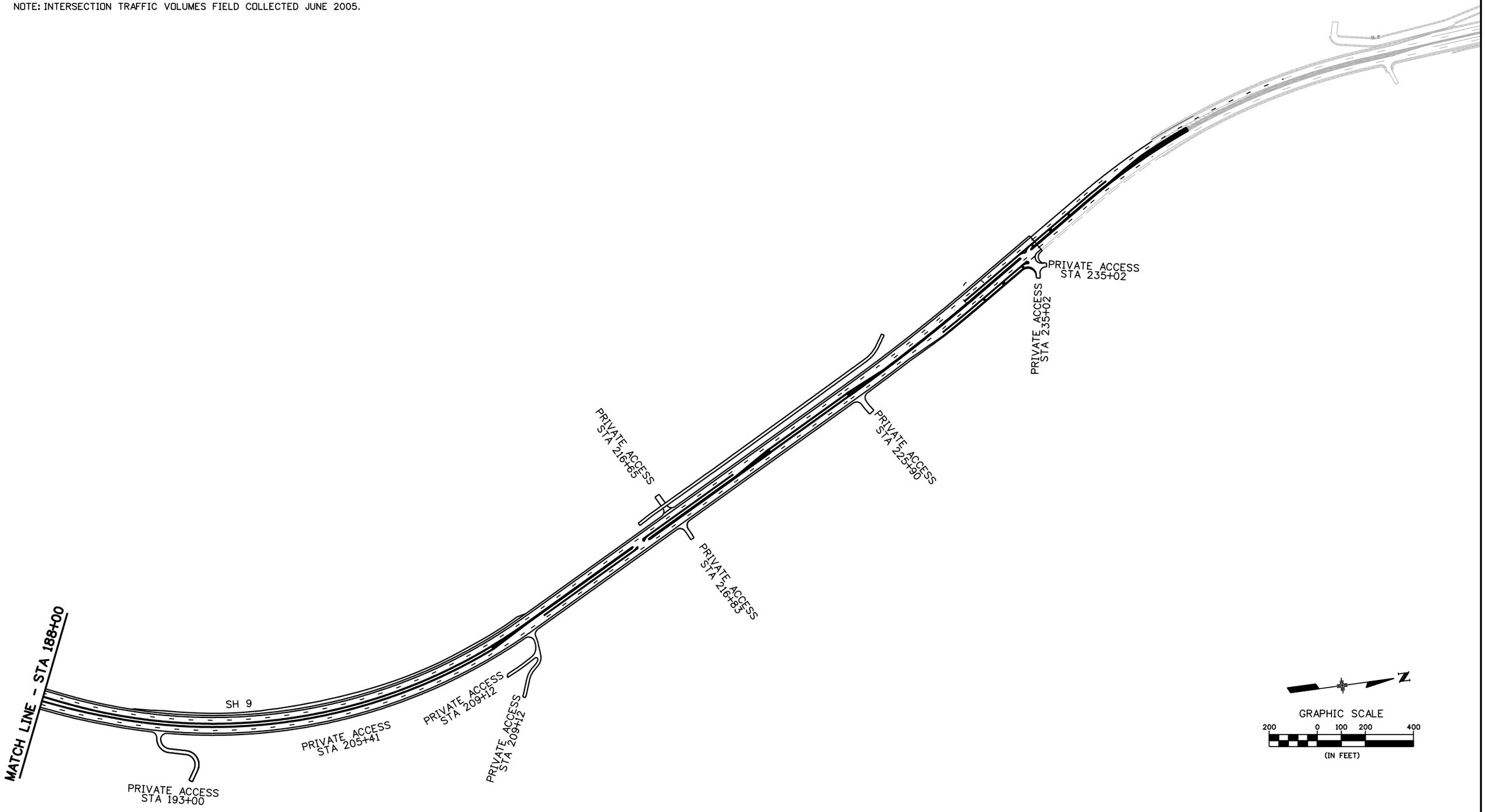


| | | | |
|---|---|---|---|
| Print Date: 1/26/2009 | Sheet Revisions | Colorado Department of Transportation | As Constructed |
| File Name: 16439TrafficVolumes02.dgn | Date: / Comments / Init. | DOT Department of Transportation | No Revisions: |
| Horiz. Scale: 1:400 Vert. Scale: As Noted | | Mountain Residency P.O. Box 399 | Revised: |
| Unit Information Unit Leader Initials | | Dumont, CO 80436 | |
| PBSJ 4601 DTC Boulevard, Suite 700 Denver, CO 80237 Phone: (303) 221-7275 Fax: (303) 221-7276 | | Phone: 303-512-5750 FAX: 303-512-5775 | Void: |
| | | Region 1 DCW | |

| TRAFFIC VOLUMES (FOR INFORMATION ONLY) | | | | Project No./Code |
|---|---|---|---|---|
| Designer: | SLZ | Structure Numbers | | STA 0091-035 |
| Detailer: | SLZ | | | 16439 |
| Sheet Subset: | TRAFFIC | Subset Sheets: | 2 of 2 | Sheet Number 42 |

21698 8:52:01 AM S:\Tranproj\246220-05\14927\Consultants\Plot_Sets\SHELF\16439TrafficVolumes02.dgn

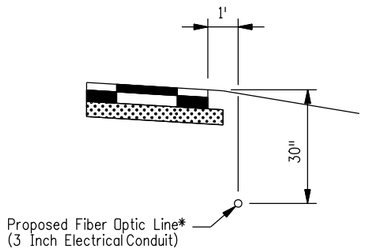


## FIBER OPTIC TYPICAL SECTION No. 1

*The Engineer may field adjust the location of the proposed fiber optic line to fit existing conditions.

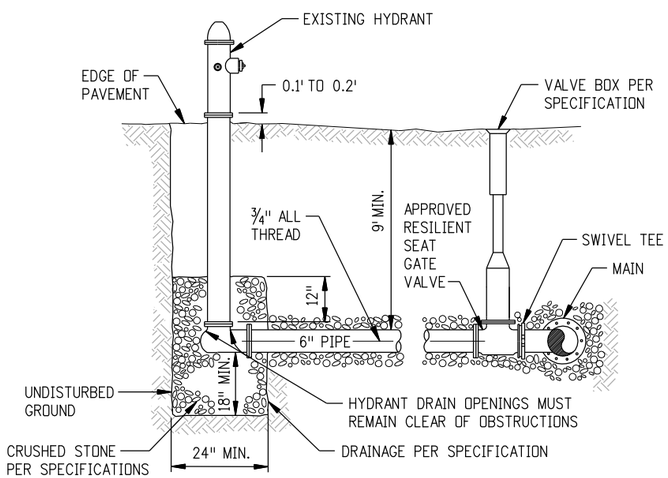


## FIRE HYDRANT RELOCATION DETAIL

NOTE:

1. CONTRACTOR SHALL PROTECT FIRE HYDRANT ASSEMBLIES DURING CONSTRUCTION WITH 4x4 WOOD POSTS BURIED 4' DEEP, EXTENDING 4' ABOVE GROUND. POSTS TO BE PAINTED ORANGE.

2. RESTRAIN HYDRANT TO GATE VALVE WITH 2-3/4" ALL THREAD BOLTS.

3. 6" PIPE SHALL BE INSULATED PER BEDDING ZONE DETAIL.

## UTILITY GENERAL NOTES

1. ALL UTILITY RELOCATION WORK SHALL BE PERFORMED BY EACH RESPECTIVE UTILITY COMPANY AND/OR ITS CONTRACTOR PRIOR TO OR DURING CONSTRUCTION.

2. PRIOR TO CONSTRUCTION, THE CONTRACTOR SHALL CONFIRM THAT UTILITY RELOCATIONS, AS NECESSARY, HAVE PROGRESSED SUFFICIENTLY SO THAT THE CONSTRUCTION OF THE PROJECT WILL NOT BE DELAYED. THE CONTRACTOR SHALL COORDINATE CONSTRUCTION OF THE PROJECT WITH ALL UTILITIES AFFECTED BY THIS PROJECT. UTILITES NOT SCHEDULED FOR RELOCATION SHALL BE PROTECTED BY THE CONTRACTOR IN PLACE.

3. AT ALL OF THE PROPOSED STORM DRAIN AND CULVERT SITES, THE CONTRACTOR SHALL VERIFY THE LOCATION OF ALL EXISTING UTILITIES. IF DEPTH OF THE UTILITY BURIAL IS SUFFICIENT, THE CONTRACTOR SHALL VERIFY THAT RELOCATION OF UTILITY IS UNNECESSARY PRIOR TO CONSTRUCTION. NO ADDITIONAL PAYMENT WILL BE ALLOWED FOR THE MINOR ADJUSTMENTS OF STRUCTURES IN ORDER TO CLEAR A CONFLICTING UTILITY.

4. THE CONTRACTOR WILL BE RESPONSIBLE FOR ANY ADJUSTMENTS REQUIRED OF ALL VALVES, VALVE BOXES AND MANHOLES WITHIN THE PROJECT LIMITS. THE CONTRACTOR SHALL NOTIFY THE IMPACTED UTILITY COMPANY AT LEAST 48 HOURS PRIOR TO ANY WORK BEING ACCOMPLISHED.

5. THE CONTRACTOR WILL BE RESPONSIBLE FOR LOCATING UTILITIES PRIOR TO EXCAVATION. POTHOLING IS THE SOLE RESPONSIBILITY OF THE CONTRACTOR AND SHALL NOT BE MEASURED AND PAID FOR SEPERATELY BUT SHALL BE INCLUDED IN THE COST OF THE WORK.

6. UTILITY INFORMATION AS SHOWN ON THE PLAN SHEETS ARE PLOTTED FROM AVAILABLE INFORMATION. THE CONTRACTOR'S ATTENTION IS DIRECTED TO PARAGRAPH 105.06 OF THE STANDARD SPECIFICATIONS CONCERNING UTILITIES. THE CONTRACTOR SHALL CALL 1-800-922-1987 FOR UTILITY LOCATIONS AT LEAST TWO (2) WORKING DAYS PRIOR TO ANY DIGGING, NOT INCLUDING THE DAY OF ACTUAL CONTACT.

7. ALL ABANDONED UTILITY MATERIALS WITHIN THE PROJECT LIMITS WILL BECOME THE PROPERTY OF THE CONTRACTOR. THE CONTRACTOR WILL VERIFY WITH THE UTILITY OWNER THAT THE UTILITY MATERIAL IS ABANDONED BEFORE REMOVAL. THE CONTRACTOR WILL BE RESPONSIBLE FOR THE REMOVAL AND DISPOSAL OF THE MATERIALS. THE COST FOR REMOVAL AND DISPOSAL OF THE ABANDONED UTILITY MATERIALS WILL NOT BE PAID FOR SEPARATELY, BUT SHALL BE INCLUDED IN THE WORK.

8. PRIVATE SERVICE LINES ARE NOT SHOWN.

9. THE CONTRACTOR SHALL PROVIDE AT LEAST ONE WEEK NOTICE TO THE APPROPRIATE UTILITY COMPANIES FOR ATTENDANCE AT THE NEXT WEEKLY UTILITY COORDINATION MEETING WHERE THE UTILITIES ARE AFFECTED.

10. IT IS ESTIMATED THAT 10,600 LF OF 3 INCH ELECTRICAL CONDUIT FROM STA 131+00 TO STA 236+00 AND 21 EACH PULL BOXES WILL BE REQUIRED FOR THE PROJECT. COORDINATE PULL BOX LOCATIONS WITH THE ENGINEER. PULL BOXES WILL NOT BE PAID FOR SEPARATELY, BUT INCLUDED IN THE WORK.

11. THE EXISTING PRV VAULT (STA 174+51 RT) IS 8 FEET IN DIAMETER. THE EXISTING VENT PIPE EXITS THE MANHOLE AT A DEPTH OF 48 INCHES BELOW THE EXISTING TOP OF THE MANHOLE LID. IT IS 2 INCH SOFT K COPPER. THE VENT PIPE EXTENSION SHALL BE CONSTRUCTED USING 2 INCH SOFT K COPPER TUBING WITH COMPRESSION FITTINGS AT THE SPLICE POINT OF THE EXISTING VENT PIPE. THE EXISTING BOLLARDS SHALL BE RESET A MINIMUM OF 18 FEET FROM THE EDGE OF THE TRAVELED LANE TO MEET CLEAR ZONE REQUIREMENTS; THE EXTENDED VENT PIPE SHALL BE ATTACHED TO ONE OF THE BOLLARDS. THE VAULT LID SHALL BE REPLACED WITH A TRAFFIC RATED LID. THE CONTRACTOR SHALL SUBMIT SHOP DRAWINGS OF THE VENT PIPE EXTENSION TO THE ENGINEER FOR REVIEW.

## LEGEND

| | |
|---|---|
| — — — | EXISTING OVERHEAD ELECTRIC |
| — E — — — E — — — E — | EXISTING BURIED ELECTRIC |
| — G — — — G — — — G — | EXISTING NATURAL GAS |
| —→—→—→ | EXISTING SANITARY SEWER |
| — — — | EXISTING OVERHEAD TELEPHONE |
| — — T — — — T — — — | EXISTING BURIED TELEPHONE |
| — — FO — — — FO — — — | EXISTING BURIED FIBER OPTIC |
| — — TV — — — TV — — — | EXISTING BURIED TELEVISION |
| — — W — — — W — — — | EXISTING BURIED WATER LINE |
| | EXISTING TRAFFIC DETECTOR LOOP |
| —— FO ——— FO ——— | PROPOSED BURIED FIBER OPTIC |

## UTILITY CONTACT LIST

CDOT Region 1 Utilities
Dave Ruble
Utility Coordinator
18500 E. Colfax
Aurora, CO 80111
(303) 365-7310
dave.l.ruble@dot.state.co.us

CDOT Region 1 Traffic Systems
James Chase
Traffic Systems Coordinator
18500 E. Colfax
Aurora, CO 80111
(303) 365-7312
jim.chase@dot.state.co.us

CDOT Region 1 Traffic Signals
Steve Smith
Traffic Signals Coordinator
(970) 668-0253
steve.smith@dot.state.co.us

Xcel Energy (Electrical)
Loren Vawser
(970) 262-4034
loren.vawser@xcelenergy.com

Xcel Energy (Gas)
Sarah Robinson
(303) 571-3926
sarah.robinson@xcelenergy.com

Qwest Communications (Local)
Sam Tooley
(970) 468-6860

Town of Breckenridge (Water)
Gary Roberts
(970) 453-3173
garyr@townofbreckenridge.com

Town of Breckenridge (Public Works)
Project Engineer
Dale Stein
(970) 453-3164
dales@townofbreckenridge.com

Breckenridge Sanitation District
Andy Carlberg
(970) 453-2723

811 Know what's below. Call before you dig.

CALL 2-BUSINESS DAYS IN ADVANCE BEFORE YOU DIG, GRADE, OR EXCAVATE FOR THE MARKING OF UNDERGROUND MEMBER UTILITIES

NOTE:
THE INFORMATION SHOWN ON THIS DRAWING CONCERNING TYPE AND LOCATION OF UNDERGROUND AND OTHER UTILITIES IS NOT GUARANTEED TO BE ACCURATE OR ALL INCLUSIVE. THE CONTRACTOR IS RESPONSIBLE FOR MAKING ALL DETERMINATIONS AS TO THE TYPE AND LOCATION OF UNDERGROUND AND OTHER UTILITIES AS MAY BE NECESSARY TO AVOID DAMAGE THERETO.

| POTHOLE INFORMATION | | | | |
|---|---|---|---|---|
| NO. | UTILITY | DIAMETER | DEPTH TO TOP | COMMENTS |
| 1 | FIBER OPTIC | 2 INCH | 58 INCHES | |
| 2 | GAS | 6 INCH | 56 INCHES | |

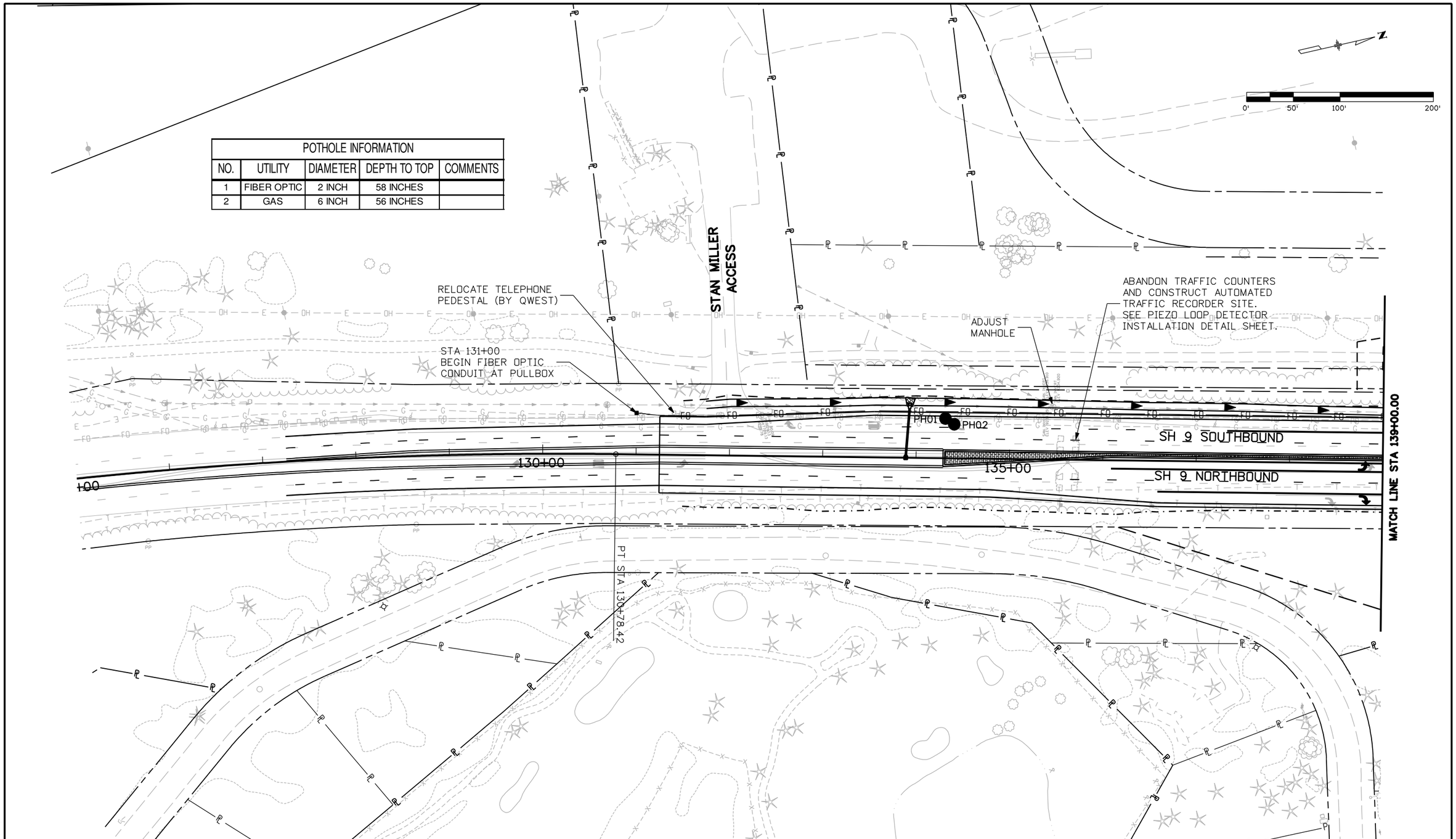


Print Date: 1/26/2009
File Name: 16439UtilitySheet01.dgn
Horiz. Scale: 1:100 Vert. Scale: As Noted
Unit Information Unit Leader Initials

PBSJ 4601 DTC Boulevard, Suite 700 Denver, CO 80237 Phone: (303) 221-7275 Fax: (303) 221-7276

| Sheet Revisions | | |
|---|---|---|
| Date: | Comments | Init. |
| | | |
| | | |
| | | |
| | | |

Colorado Department of Transportation
Mountain Residency P.O. Box 399
Dumont, CO 80436
Phone: 303-512-5750 FAX: 303-512-5775
Region 1 DCW

As Constructed
No Revisions:
Revised:
Void:

SH 9 UTILITY PLAN
STA 125+00 TO STA 139+00

Designer: SLZ
Detailer: SLZ
Sheet Subset: UTILITY
Structure Numbers
Subset Sheets: 2 of 11

Project No./Code
STA 0091-035
16439
Sheet Number 44

21698 8:53:17 AM S:\Tranproj\246220-05\14927\Consultants\Plot_Sets\SHELF\16439UtilitySheet01.dgn

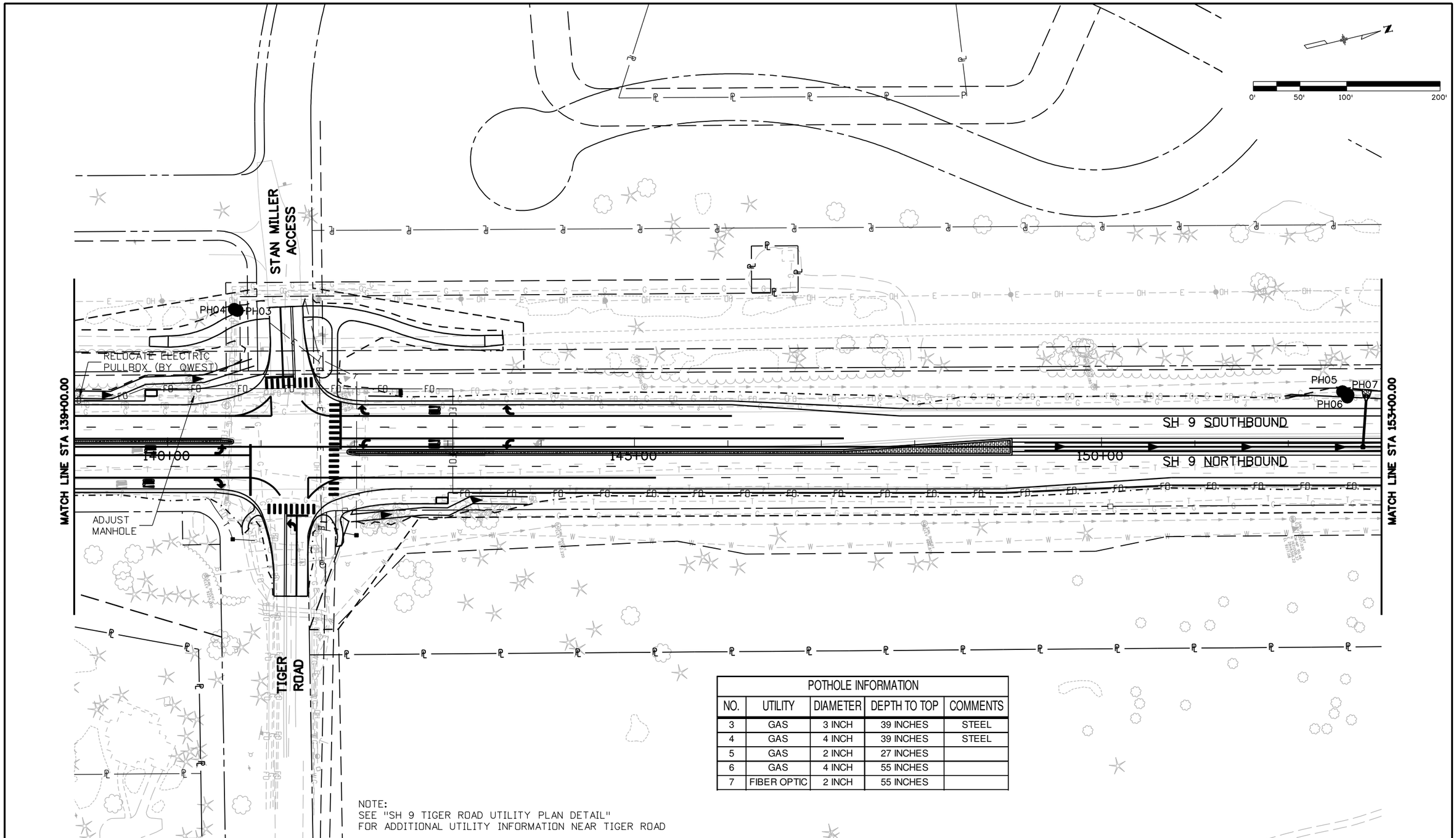


| POTHOLE INFORMATION | | | | |
|---|---|---|---|---|
| NO. | UTILITY | DIAMETER | DEPTH TO TOP | COMMENTS |
| 3 | GAS | 3 INCH | 39 INCHES | STEEL |
| 4 | GAS | 4 INCH | 39 INCHES | STEEL |
| 5 | GAS | 2 INCH | 27 INCHES | |
| 6 | GAS | 4 INCH | 55 INCHES | |
| 7 | FIBER OPTIC | 2 INCH | 55 INCHES | |

NOTE:
SEE "SH 9 TIGER ROAD UTILITY PLAN DETAIL"
FOR ADDITIONAL UTILITY INFORMATION NEAR TIGER ROAD

Print Date: 1/26/2009
File Name: 16439UtilitySheet02.dgn
Horiz. Scale: 1:100 Vert. Scale: As Noted
Unit Information Unit Leader Initials

PBSJ 4601 DTC Boulevard, Suite 700 Denver, CO 80237 Phone: (303) 221-7275 Fax: (303) 221-7276

Sheet Revisions

| Date: | Comments | Init. |
|---|---|---|
| | | |
| | | |
| | | |

Colorado Department of Transportation
DOT DEPARTMENT OF TRANSPORTATION
Mountain Residency P.O. Box 399
Dumont, CO 80436
Phone: 303-512-5750 FAX: 303-512-5775
Region 1 DCW

As Constructed
No Revisions:
Revised:
Void:

SH 9 UTILITY PLAN
STA 139+00 TO STA 153+00

Designer: SLZ
Detailer: SLZ
Structure Numbers
Sheet Subset: UTILITY
Subset Sheets: 3 of 11

Project No./Code
STA 0091-035
16439
Sheet Number 45

21698 8:53:39 AM S:\Tranproj\246220-05\14927\Consultants\Plot_Sets\SHELF\16439UtilitySheet02.dgn

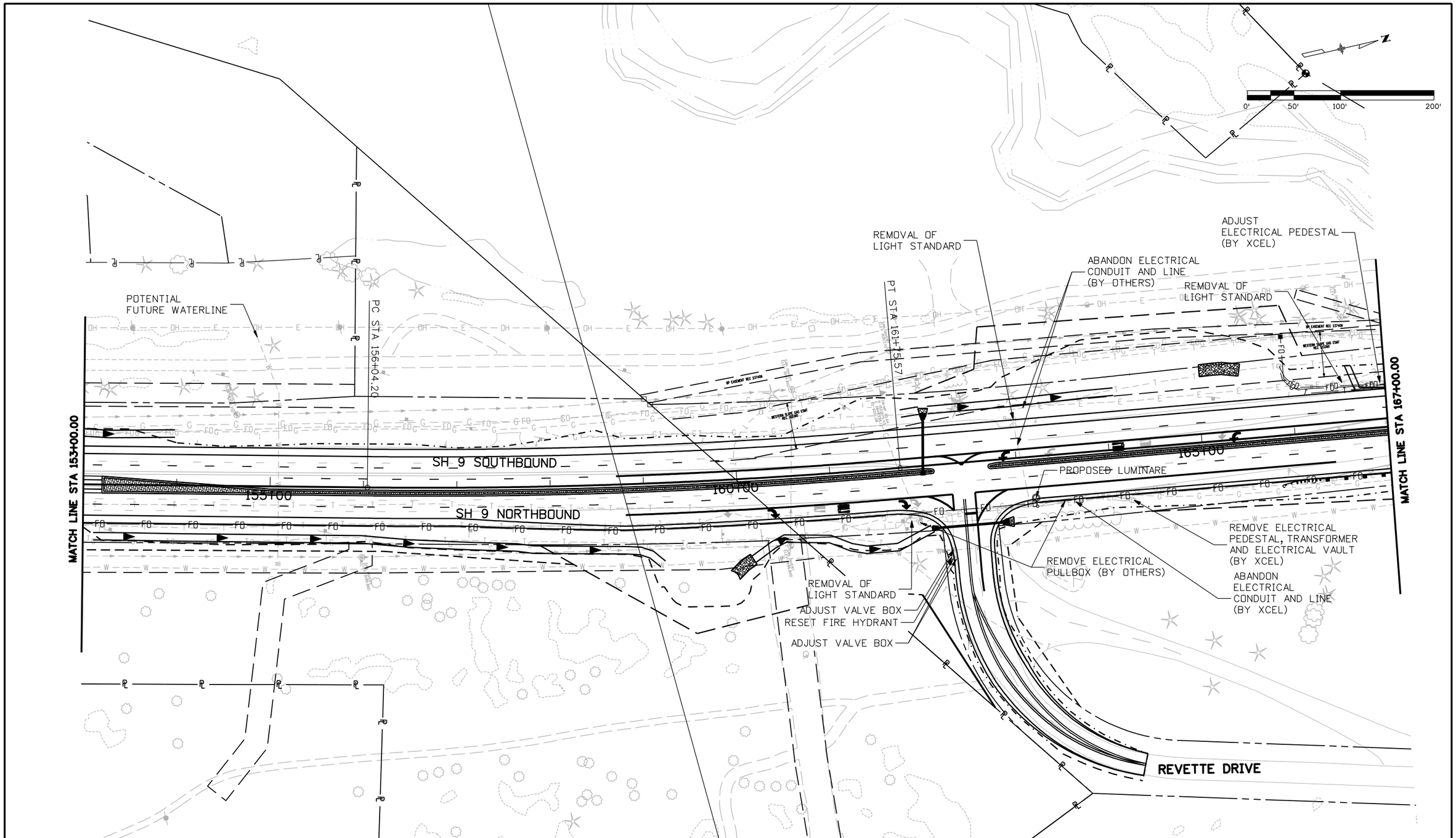


21698 8:54:03 AM S:\Tranproj\246220-05\14927\Consultants\Plot_Sets\SHELF\16439UtilitySheet03.dgn

| | |
|---|---|
| Print Date: 1/26/2009 | |
| File Name: 16439UtilitySheet03.dgn | |
| Horiz. Scale: 1:100 | Vert. Scale: As Noted |
| Unit Information | Unit Leader Initials |

PBSJ 4601 DTC Boulevard, Suite 700 Denver, CO 80237 Phone: (303) 221-7275 Fax: (303) 221-7276

| Sheet Revisions | | |
|---|---|---|
| Date: | Comments | Init. |
| | | |
| | | |
| | | |
| | | |

Colorado Department of Transportation

DOT DEPARTMENT OF TRANSPORTATION

Mountain Residency P.O. Box 399
Dumont, CO 80436
Phone: 303-512-5750 FAX: 303-512-5775

Region 1 DCW

| As Constructed |
|---|
| No Revisions: |
| Revised: |
| Void: |

SH 9 UTILITY PLAN
STA 153+00 TO STA 167+00

| | | | |
|---|---|---|---|
| Designer: | SLZ | Structure Numbers | |
| Detailer: | SLZ | | |
| Sheet Subset: | UTILITY | Subset Sheets: | 4 of 11 |

| Project No./Code |
|---|
| STA 0091-035 |
| 16439 |
| Sheet Number 46 |

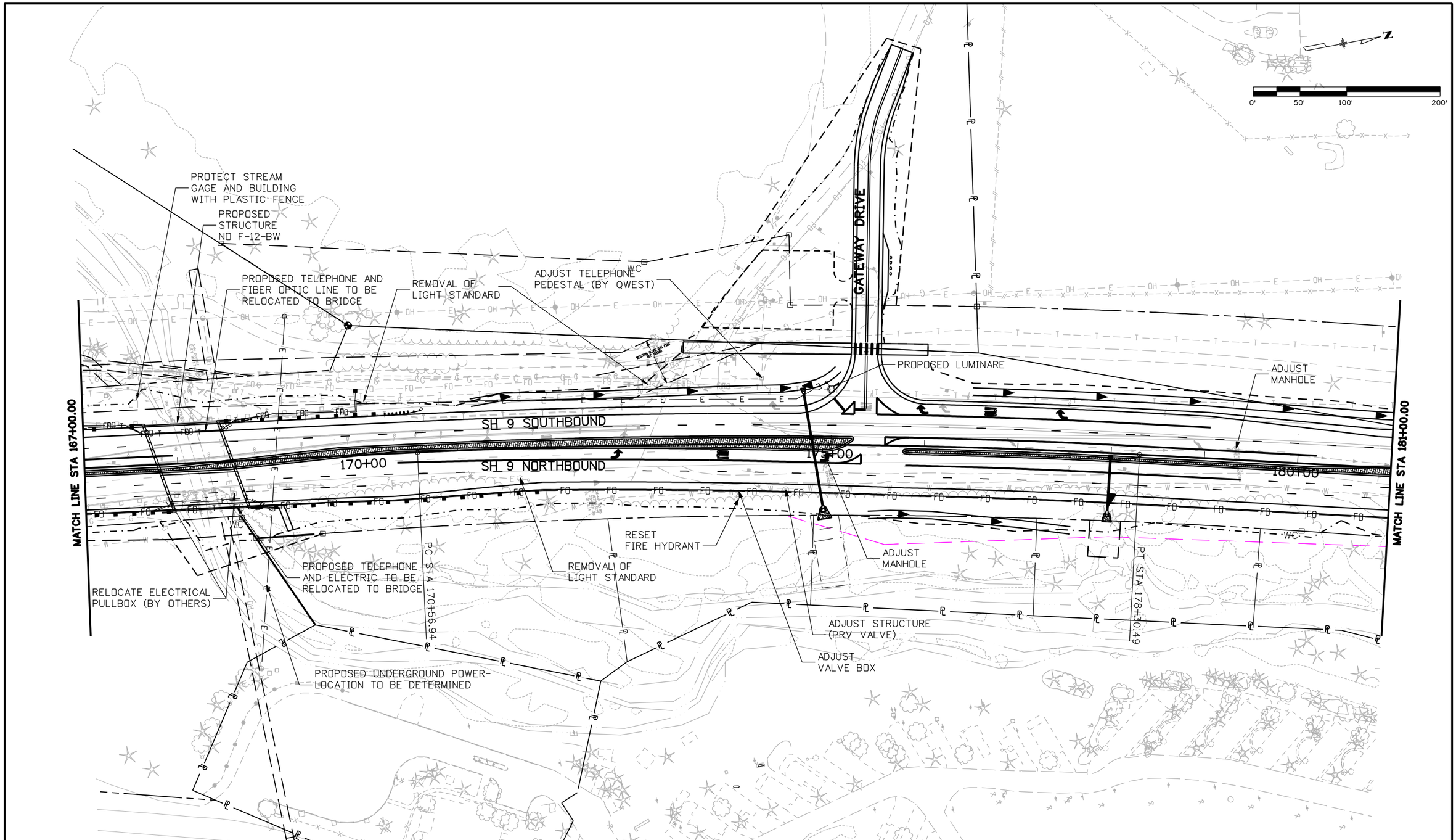


21698 8:54:29 AM S:\Tranproj\246220-05\14927\Consultants\Plot_Sets\SHELF\16439UtilitySheet04.dgn

Print Date: 1/26/2009
File Name: 16439UtilitySheet04.dgn
Horiz. Scale: 1:100 Vert. Scale: As Noted
Unit Information Unit Leader Initials

PBSJ 4601 DTC Boulevard, Suite 700 Denver, CO 80237 Phone: (303) 221-7275 Fax: (303) 221-7276

| Sheet Revisions | | |
|---|---|---|
| Date: | Comments | Init. |
| | | |
| | | |
| | | |
| | | |

Colorado Department of Transportation
DOT
Mountain Residency P.O. Box 399
Dumont, CO 80436
Phone: 303-512-5750 FAX: 303-512-5775
Region 1 DCW

As Constructed
No Revisions:
Revised:
Void:

SH 9 UTILITY PLAN
STA 167+00 TO STA 181+00

Designer: SLZ
Detailer: SLZ
Sheet Subset: UTILITY
Structure Numbers
Subset Sheets: 5 of 11

Project No./Code
STA 0091-035
16439
Sheet Number 47

| POTHOLE INFORMATION | | | | |
|---|---|---|---|---|
| NO. | UTILITY | DIAMETER | DEPTH TO TOP | COMMENTS |
| 8 | WATER | 8 INCH | 116 INCHES | |
| 9 | GAS | 2 INCH | 48 INCHES | PVC |

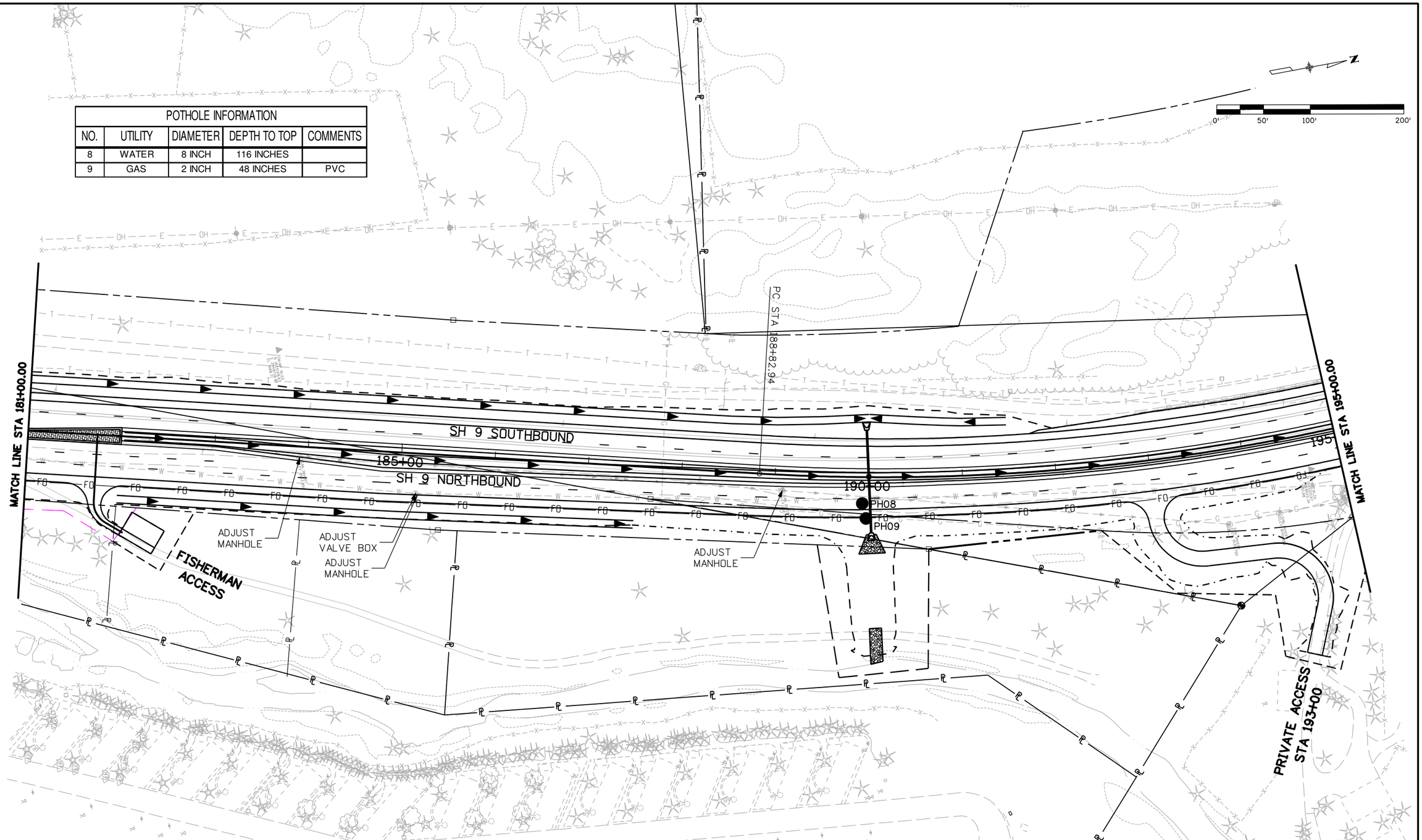


Print Date: 1/26/2009
File Name: 16439UtilitySheet05.dgn
Horiz. Scale: 1:100 Vert. Scale: As Noted
Unit Information Unit Leader Initials

PBSJ 4601 DTC Boulevard, Suite 700
Denver, CO 80237
Phone: (303) 221-7275 Fax: (303) 221-7276

| Sheet Revisions | | |
|---|---|---|
| Date: | Comments | Init. |
| | | |
| | | |
| | | |
| | | |

Colorado Department of Transportation
DOT DEPARTMENT OF TRANSPORTATION
Mountain Residency P.O. Box 399
Dumont, CO 80436
Phone: 303-512-5750 FAX: 303-512-5775
Region 1 DCW

As Constructed
No Revisions:
Revised:
Void:

SH 9 UTILITY PLAN
STA 181+00 TO STA 195+00

Designer: SLZ
Detailer: SLZ
Sheet Subset: UTILITY
Structure Numbers
Subset Sheets: 6 of 11

Project No./Code
STA 0091-035
16439
Sheet Number 48

21698 8:54:50 AM S:\Tranproj\246220-05\14927\Consultants\Plot_Sets\SHELF\16439UtilitySheet05.dgn

| POTHOLE INFORMATION | | | | |
|---|---|---|---|---|
| NO. | UTILITY | DIAMETER | DEPTH TO TOP | COMMENTS |
| 10 | WATER | 8 INCH | 105 INCHES | |
| 11 | GAS | 2 INCH | 46 INCHES | PVC |

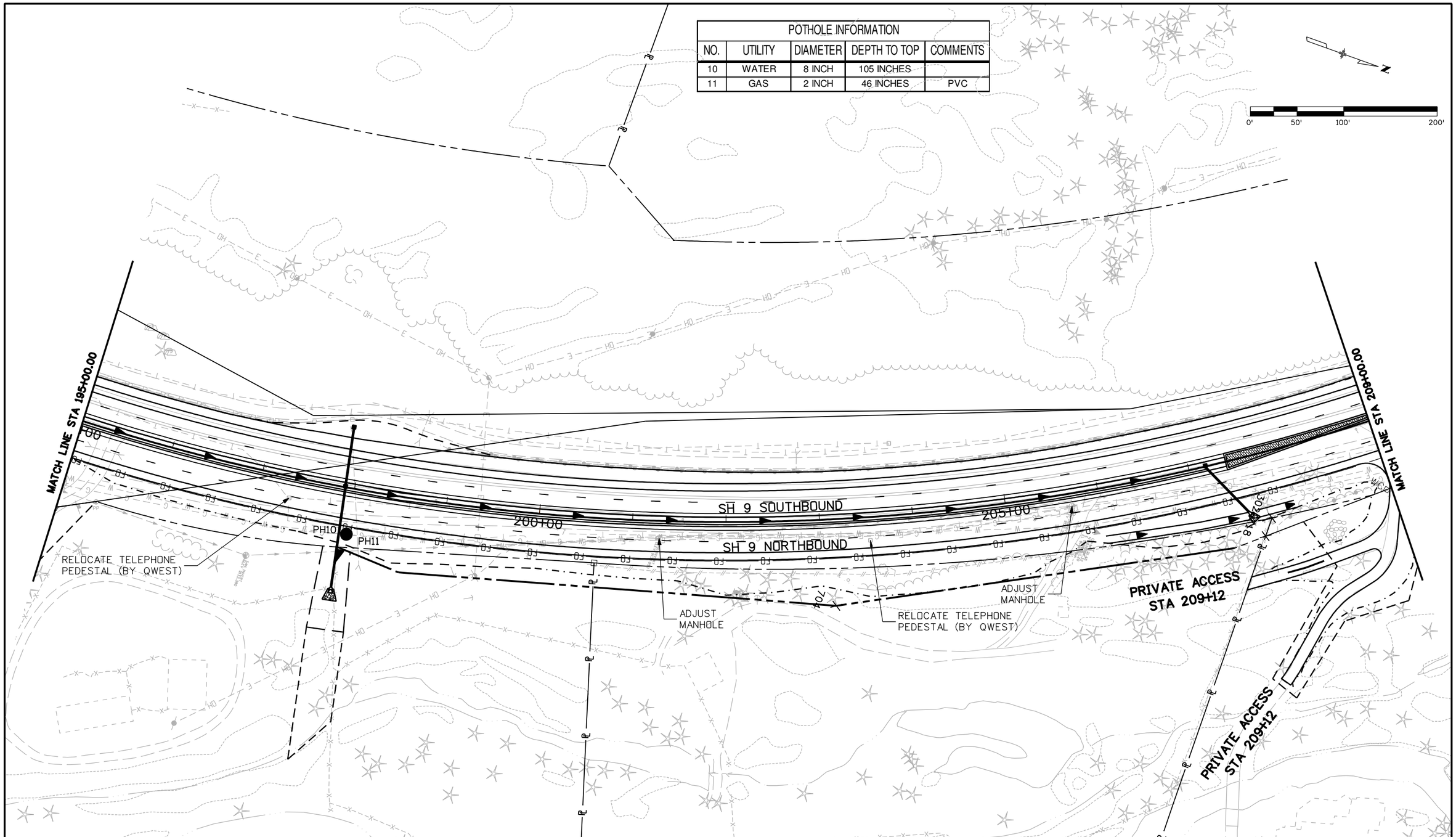


Print Date: 1/26/2009
File Name: 16439UtilitySheet06.dgn
Horiz. Scale: 1:100 Vert. Scale: As Noted
Unit Information Unit Leader Initials

PBSJ 4601 DTC Boulevard, Suite 700
Denver, CO 80237
Phone: (303) 221-7275 Fax: (303) 221-7276

Sheet Revisions

| Date: | Comments | Init. |
|---|---|---|
| | | |
| | | |
| | | |
| | | |

Colorado Department of Transportation
Mountain Residency P.O. Box 399
Dumont, CO 80436
Phone: 303-512-5750 FAX: 303-512-5775
Region 1 DCW

As Constructed
No Revisions:
Revised:
Void:

SH 9 UTILITY PLAN
STA 195+00 TO STA 209+00

Designer: SLZ
Detailer: SLZ
Sheet Subset: UTILITY
Structure Numbers
Subset Sheets: 7 of 11

Project No./Code
STA 0091-035
16439
Sheet Number 49

21698 8:55:22 AM S:\Tranproj\246220-05\14927\Consultants\Plot_Sets\SHELF\16439UtilitySheet06.dgn

| POTHOLE INFORMATION | | | | |
|---|---|---|---|---|
| NO. | UTILITY | DIAMETER | DEPTH TO TOP | COMMENTS |
| 12 | TELEPHONE | 2 INCH | 16 INCHES | |
| 13 | ELECTRIC | 4 INCH | 52 INCHES | |
| 14 | GAS | 2 INCH | 50 INCHES | PVC |

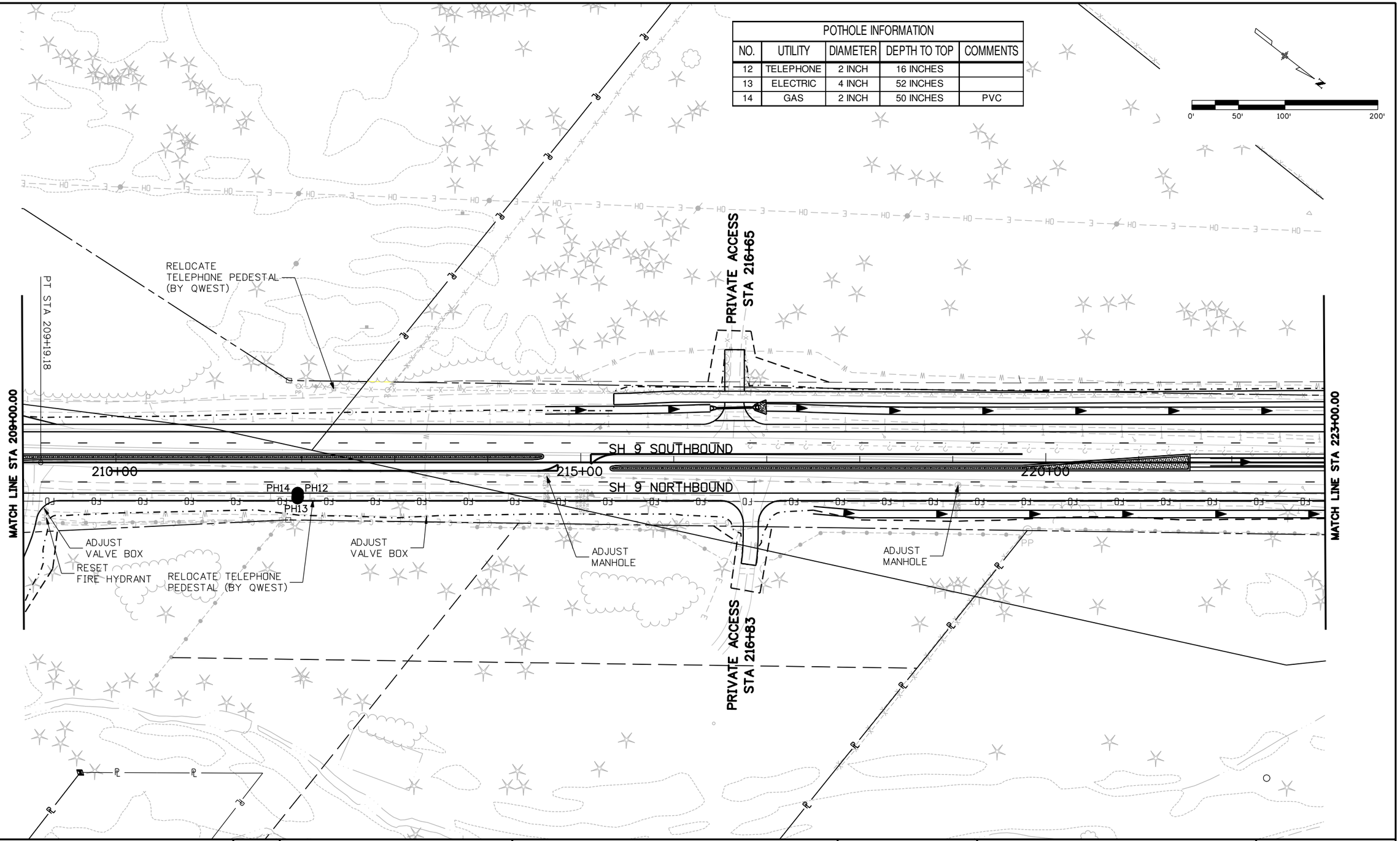


Print Date: 1/26/2009
File Name: 16439UtilitySheet07.dgn
Horiz. Scale: 1:100 Vert. Scale: As Noted
Unit Information Unit Leader Initials

PBSJ 4601 DTC Boulevard, Suite 700
Denver, CO 80237
Phone: (303) 221-7275 Fax: (303) 221-7276

| Sheet Revisions | | |
|---|---|---|
| Date: | Comments | Init. |
| | | |
| | | |
| | | |
| | | |

Colorado Department of Transportation
Mountain Residency P.O. Box 399
Dumont, CO 80436
Phone: 303-512-5750 FAX: 303-512-5775
Region 1 DCW

As Constructed
No Revisions:
Revised:
Void:

SH 9 UTILITY PLAN
STA 209+00 TO STA 223+00

Designer: SLZ
Detailer: SLZ
Sheet Subset: UTILITY
Structure Numbers
Subset Sheets: 8 of 11

Project No./Code
STA 0091-035
16439
Sheet Number 50

21698 8:55:54 AM S:\Tranproj\246220-05\14927\Consultants\Plot_Sets\SHELF\16439UtilitySheet07.dgn

| POTHOLE INFORMATION | | | | |
|---|---|---|---|---|
| NO. | UTILITY | DIAMETER | DEPTH TO TOP | COMMENTS |
| 15 | TELEPHONE | 1 INCH | 38 INCHES | |

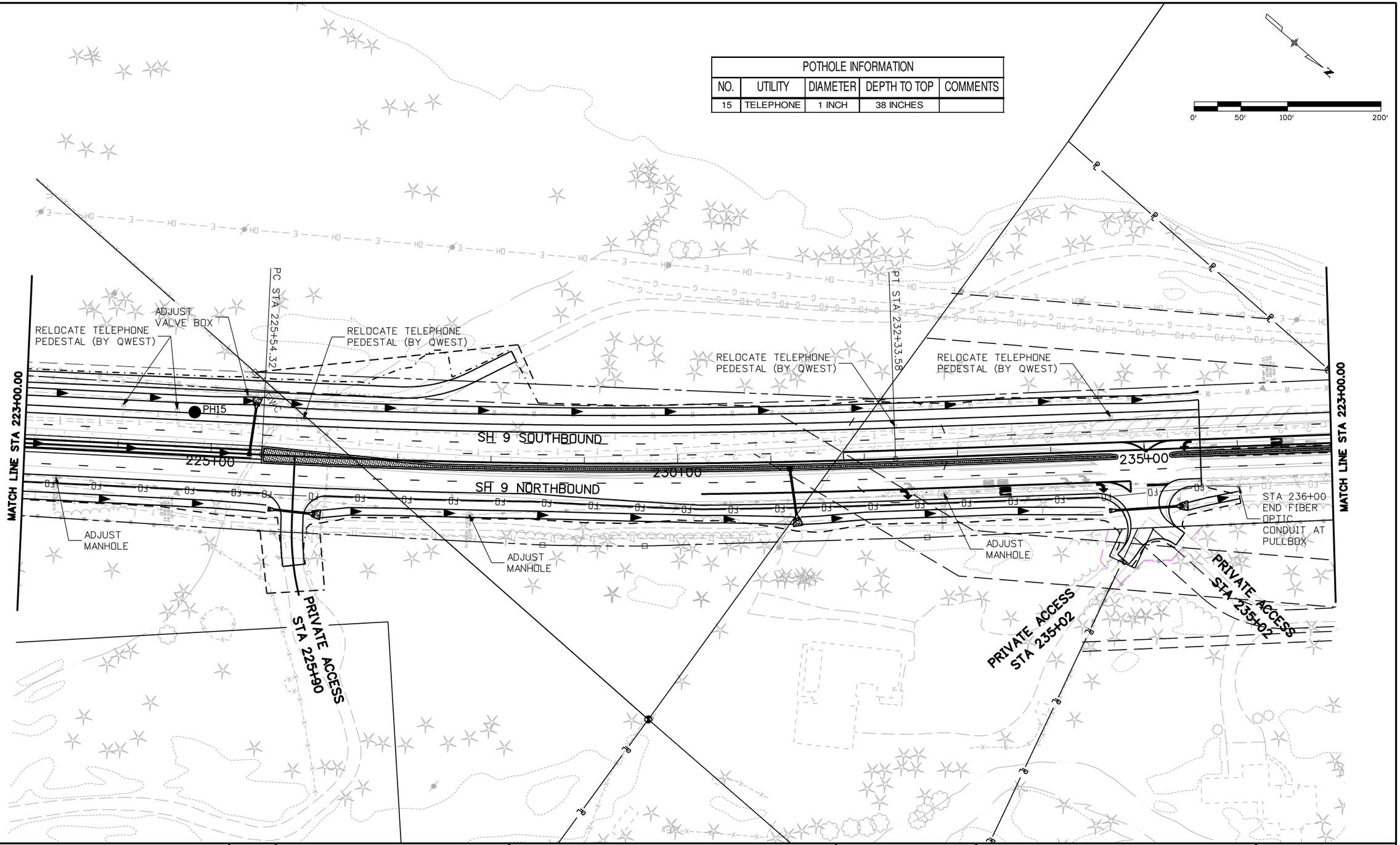


| | | | |
|---|---|---|---|
| Print Date: 1/26/2009 | | | |
| File Name: 16439UtilitySheet08.dgn | | | |
| Horiz. Scale: 1:100 | Vert. Scale: As Noted | | |
| Unit Information | Unit Leader Initials | | |

PBSJ 4601 DTC Boulevard, Suite 700 Denver, CO 80237 Phone: (303) 221-7275 Fax: (303) 221-7276

| Sheet Revisions | | |
|---|---|---|
| Date: | Comments | Init. |
| | | |
| | | |
| | | |
| | | |

Colorado Department of Transportation

DOT DEPARTMENT OF TRANSPORTATION

Mountain Residency P.O. Box 399
Dumont, CO 80436
Phone: 303-512-5750 FAX: 303-512-5775

Region 1 DCW

| As Constructed | | | |
|---|---|---|---|
| No Revisions: | | | |
| Revised: | | | |
| Void: | | | |

SH 9 UTILITY PLAN
STA 223+00 TO STA 237+00

| | | | |
|---|---|---|---|
| Designer: | SLZ | Structure Numbers | |
| Detailer: | SLZ | | |
| Sheet Subset: | UTILITY | Subset Sheets: | 9 of 11 |

| Project No./Code |
|---|
| STA 0091-035 |
| 16439 |
| Sheet Number 51 |

21698 8:56:18 AM S:\Tranproj\246220-05\14927\Consultants\Plot_Sets\SHELF\16439UtilitySheet08.dgn

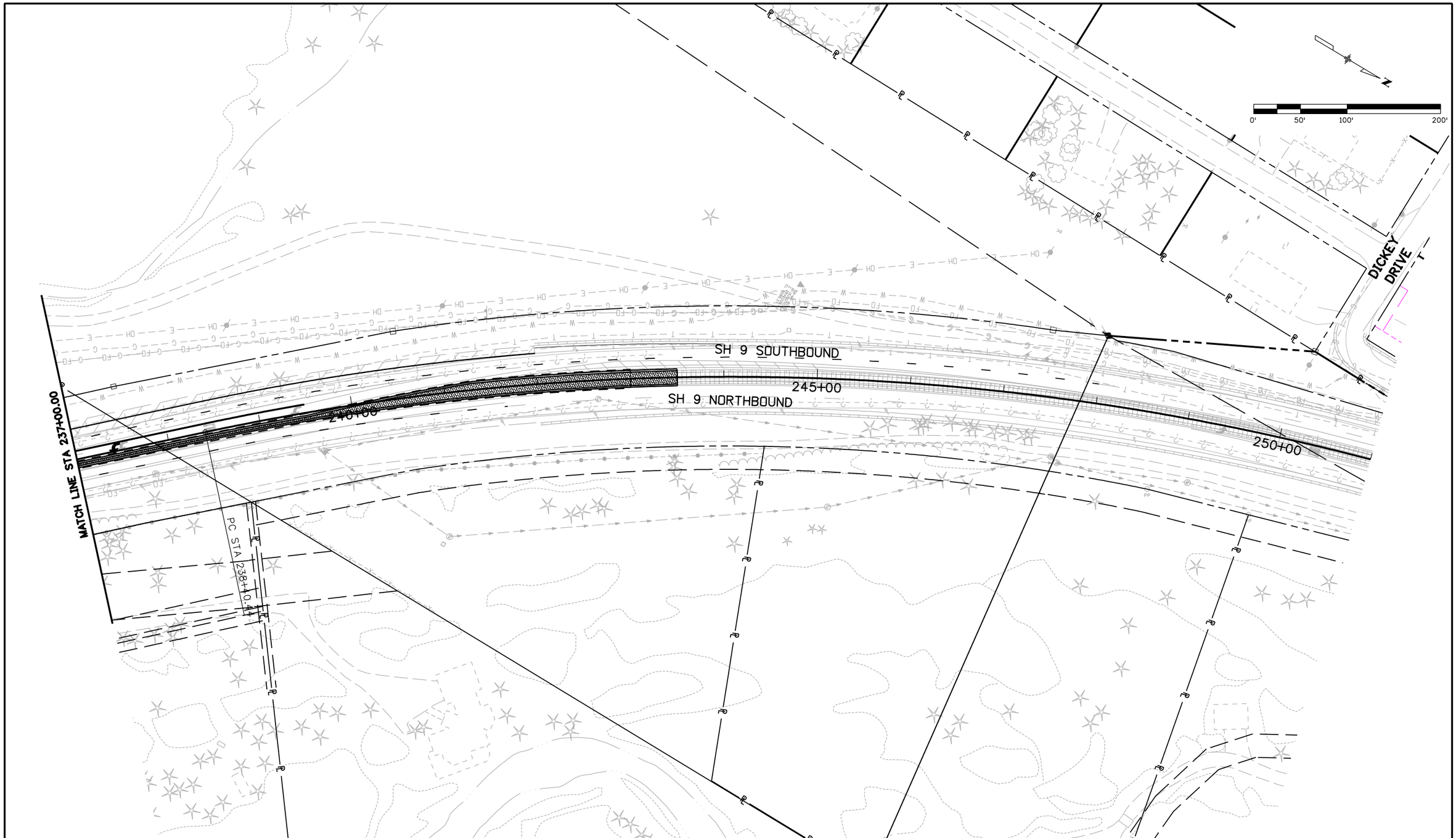


| | | | |
|---|---|---|---|
| Print Date: 1/26/2009 | | | |
| File Name: 16439UtilitySheet09.dgn | | | |
| Horiz. Scale: 1:100 | Vert. Scale: As Noted | | |
| Unit Information | Unit Leader Initials | | |

PBSJ 4601 DTC Boulevard, Suite 700
Denver, CO 80237
Phone: (303) 221-7275 Fax: (303) 221-7276

| Sheet Revisions | | |
|---|---|---|
| Date: | Comments | Init. |
| | | |
| | | |
| | | |
| | | |

Colorado Department of Transportation
DOT
DEPARTMENT OF TRANSPORTATION
Mountain Residency P.O. Box 399
Dumont, CO 80436
Phone: 303-512-5750 FAX: 303-512-5775
Region 1 DCW

As Constructed
No Revisions:
Revised:
Void:

SH 9 UTILITY PLAN
STA 237+00 TO STA 251+00

| | | | |
|---|---|---|---|
| Designer: | SLZ | Structure Numbers | |
| Detailer: | SLZ | | |
| Sheet Subset: | UTILITY | Subset Sheets: | 10 of 11 |

Project No./Code
STA 0091-035
16439
Sheet Number 52

21698 8:56:42 AM S:\Tranproj\246220-05\14927\Consultants\Plot_Sets\SHELF\16439UtilitySheet09.dgn

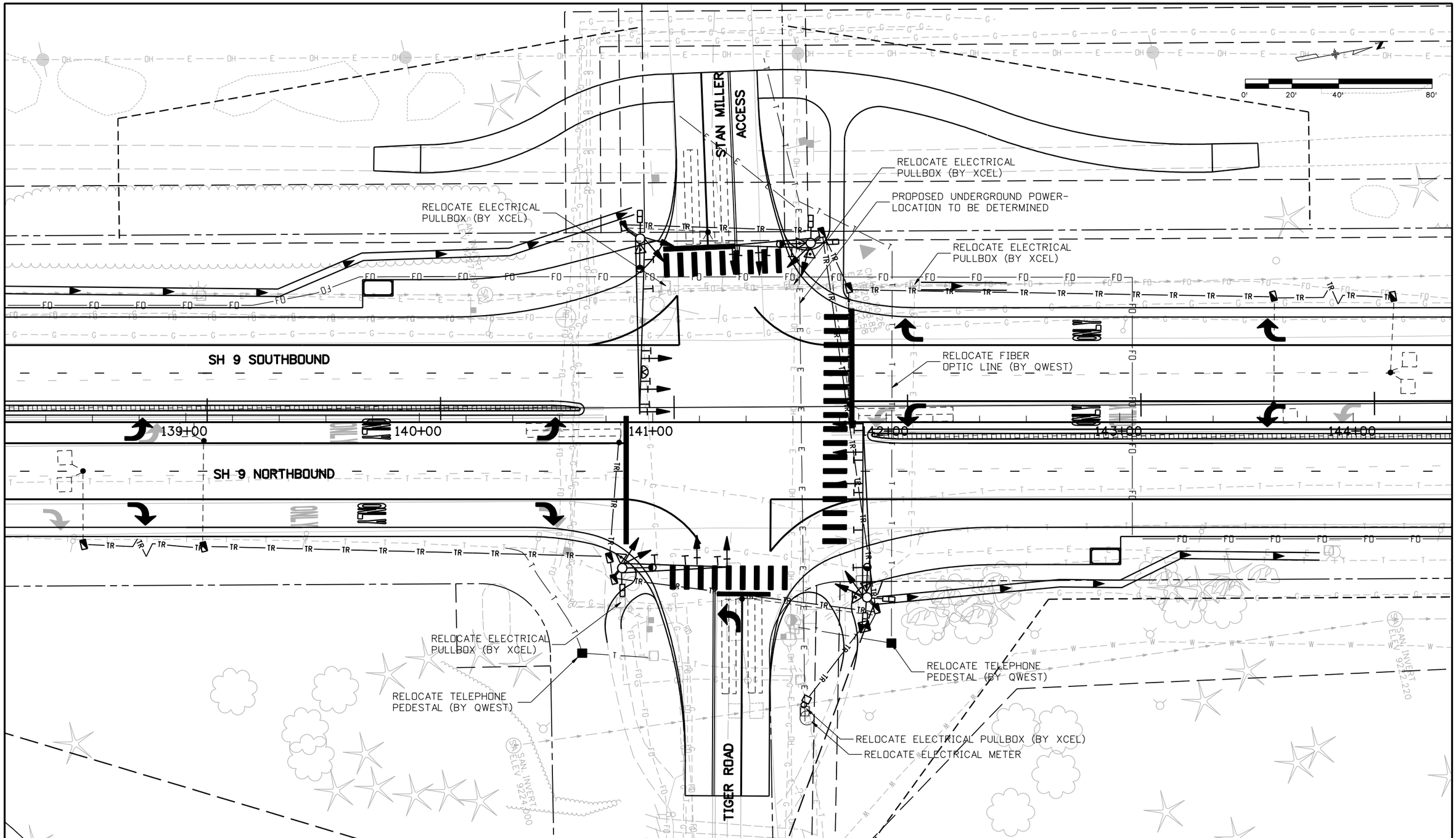


21698 8:57:28 AM S:\Tranproj\246220-05\14927\Consultants\Plot_Sets\SHELF\16439UtilitySheet_Detail01.dgn

| | | | |
|---|---|---|---|
| Print Date: 1/26/2009 | | | |
| File Name: 16439UtilitySheet_Detail01.dgn | | | |
| Horiz. Scale: 1:40 | Vert. Scale: As Noted | | |
| Unit Information | Unit Leader Initials | | |

PBSJ 4601 DTC Boulevard, Suite 700 Denver, CO 80237 Phone: (303) 221-7275 Fax: (303) 221-7276

Sheet Revisions

| Date: | Comments | Init. |
|---|---|---|
| | | |
| | | |
| | | |
| | | |

Colorado Department of Transportation

DOT DEPARTMENT OF TRANSPORTATION

Mountain Residency P.O. Box 399
Dumont, CO 80436
Phone: 303-512-5750 FAX: 303-512-5775

Region 1 DCW

As Constructed

No Revisions:

Revised:

Void:

SH 9 TIGER ROAD
UTILITY PLAN DETAIL

Designer: SLZ
Detailer: SLZ
Sheet Subset: UTILITY
Structure Numbers
Subset Sheets: of

Project No./Code
STA 0091-035
16439
Sheet Number 53

IT IS ESTIMATED THAT THE QUANTITIES BELOW ARE REQUIRED FOR THE REPLACEMENT OF THE AUTOMATED TRAFFIC RECORDER SITE AT APPROXIMATELY 135+60.

| | | | |
|---|---|---|---|
| 202-00220 | REMOVAL OF ASPHALT MAT | 10 | SY |
| 613-00200 | 2 INCH ELECTRICAL CONDUIT | 110 | LF |
| 614-72875 | LOOP DETECTOR WIRE | 950 | LF |
| 614-73005 | PIEZO ELECTRICAL TUBE, CLASS 2 | 4 | EA |

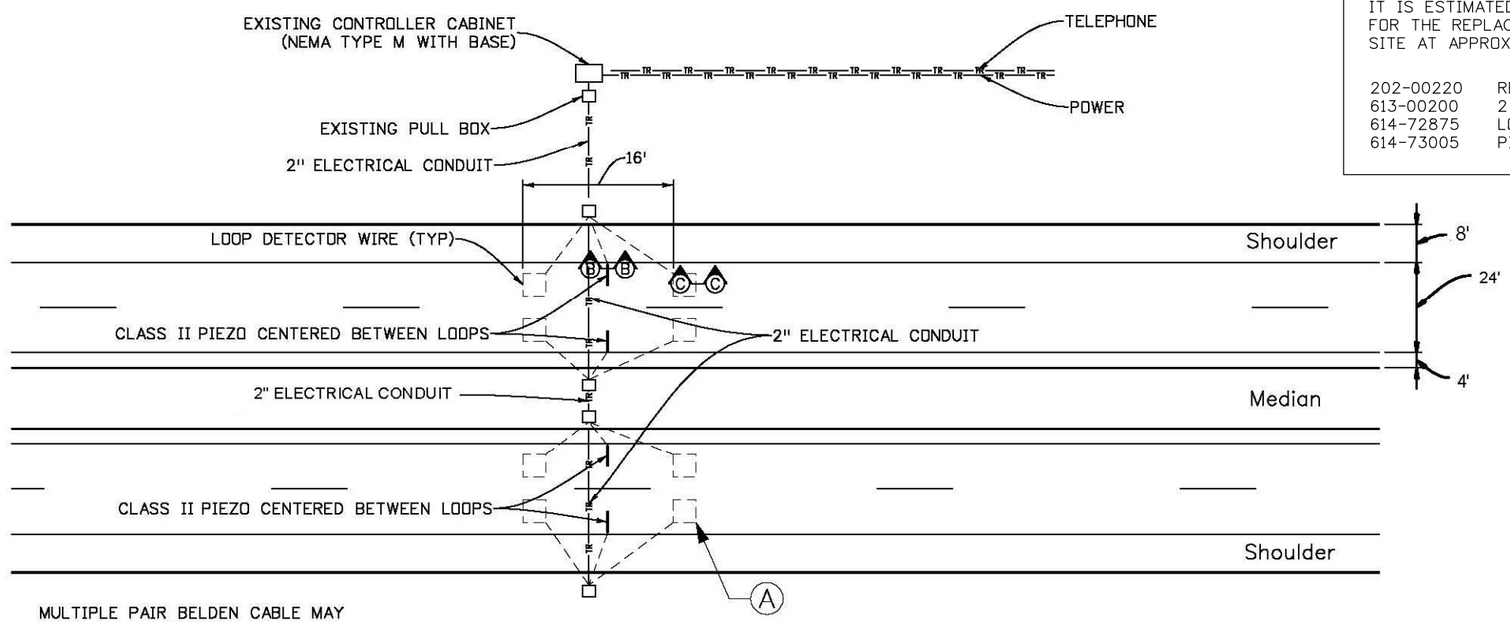


MULTIPLE PAIR BELDEN CABLE MAY BE USED IN CONDUIT.

ALL LOOPS ARE 6' X 6' ON 16' CENTERS.

LOOP GEOMETRICS AND INSTALLATION
PLAN VIEW

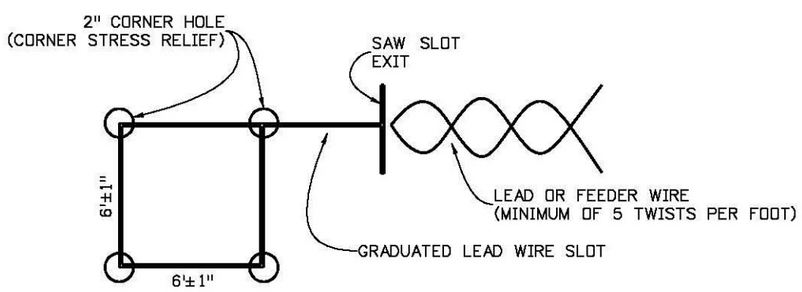


LOOP DETECTOR WIRE
DETAIL A

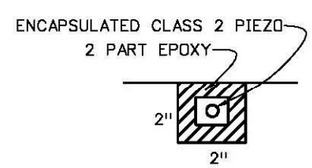


TYPICAL PIEZO SECTION
SECTION B-B

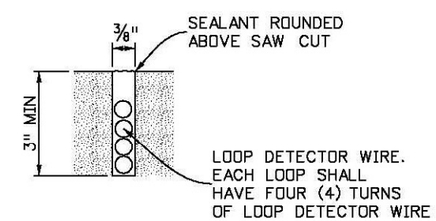


LOOP DETECTOR WIRE INSTALLATION
SECTION C-C

21698 8:58:08 AM S:\Tranproj\246220-05\14927\Consultants\Plot_Sets\SHELF\16439UtilityDetail01.dgn

| | |
|---|---|
| Print Date: 1/26/2009 | |
| File Name: 16439UtilityDetail01.dgn | |
| Horiz. Scale: 1:1 | Vert. Scale: As Noted |
| Unit Information | Unit Leader Initials |

PBSJ 4601 DTC Boulevard, Suite 700 Denver, CO 80237 Phone: (303) 221-7275 Fax: (303) 221-7276

Sheet Revisions

| Date: | Comments | Init. |
|---|---|---|
| | | |
| | | |
| | | |
| | | |

Colorado Department of Transportation
DOT
Mountain Residency P.O. Box 399
Dumont, CO 80436
Phone: 303-512-5750 FAX: 303-512-5775
Region 1 DCW

As Constructed
No Revisions:
Revised:
Void:

PIEZO LOOP DETECTOR INSTALLATION DETAIL

| | | | |
|---|---|---|---|
| Designer: | SLZ | Structure Numbers | |
| Detailer: | SLZ | | |
| Sheet Subset: | UTILITY | Subset Sheets: | 1 of 1 |

Project No./Code
STA 0091-035
16439
Sheet Number 54

NOTES:
LIMITS OF REMOVAL OF ASPHALT MAT CORRESPOND TO PROPOSED LANE LINES, CENTER OF LANES, AND EDGE OF PAVEMENTS.

THE EXISTING PAVEMENT SHALL BE CUT TO A NEAT LINE 1' FROM THE EXISTING EDGE IN AREAS OF WIDENING. SAWCUTTING WILL NOT BE PAID FOR SEPARATELY, BUT SHALL BE INCLUDED IN THE REMOVAL OF ASPHALT MAT ITEM.

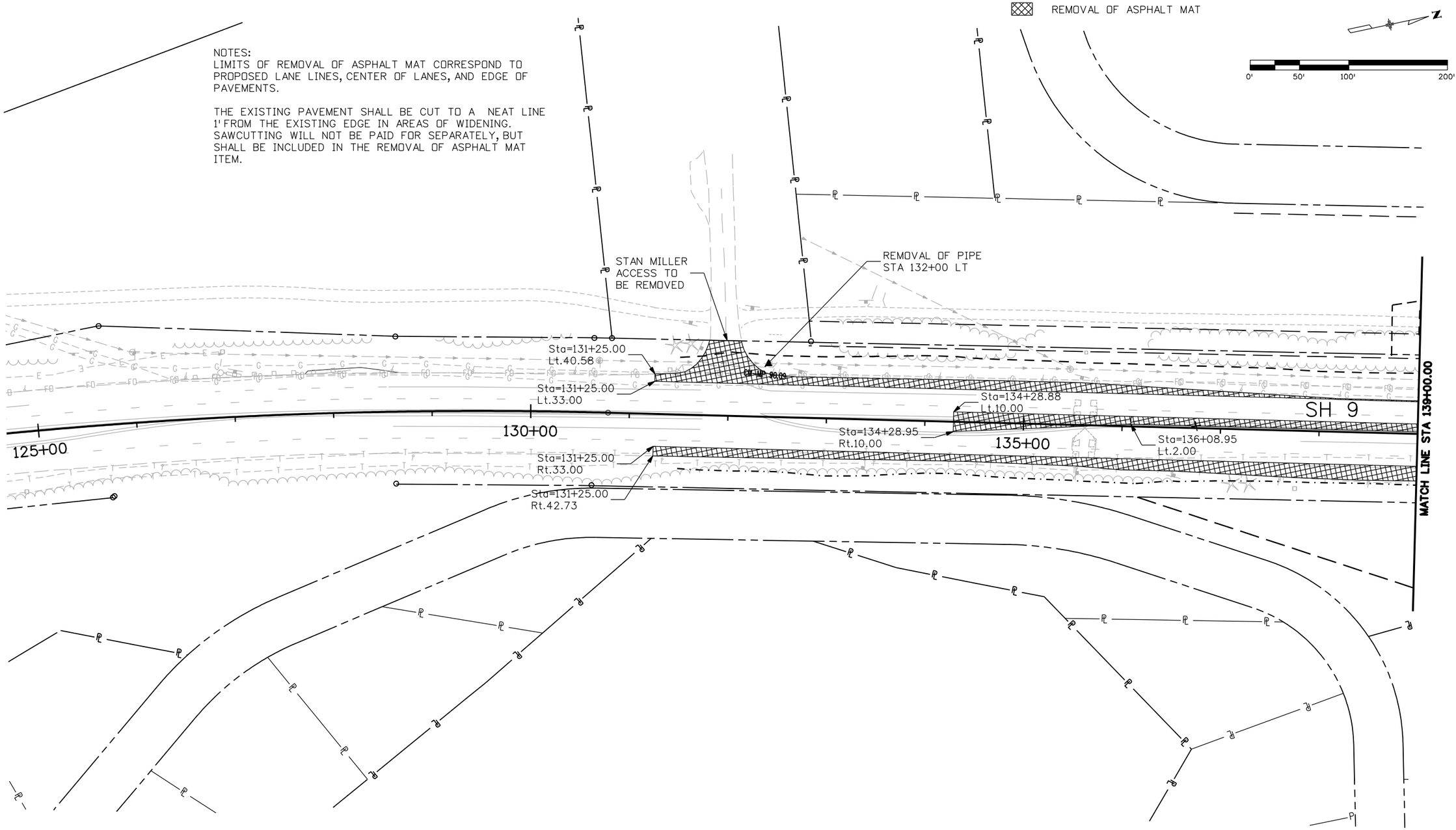


| | | | | | | |
|---|---|---|---|---|---|---|
| Print Date: 1/16/2009 | | Sheet Revisions | | | Colorado Department of Transportation | As Constructed |
| File Name: 16439Removal_Plan1.dgn | | Date: | Comments | Init. | DOT DEPARTMENT OF TRANSPORTATION | No Revisions: |
| Horiz. Scale: 1:100 Vert. Scale: As Noted | R-X | | | | Mountain Residency P.O. Box 399<br>Dumont, CO 80436<br>Phone: 303-512-5750 FAX: 303-512-5775 | Revised: |
| Unit Information Unit Leader Initials | | | | | Region 1 DCW | Void: |

| SH 9 REMOVAL PLAN STA 125+00 TO 139+00 | | | | Project No./Code |
|---|---|---|---|---|
| | | | | STA 0091-035 |
| Designer: TJT | Structure Numbers | | | 16439 |
| Detailer: TJT | | | | |
| Sheet Subset: REMOVAL | Subset Sheets: | 1 OF 9 | | Sheet Number 55 |

tuttlet 1:58:49 PM C:\Projects\16439\Design\Drawings\16439Removal_Plan1.dgn

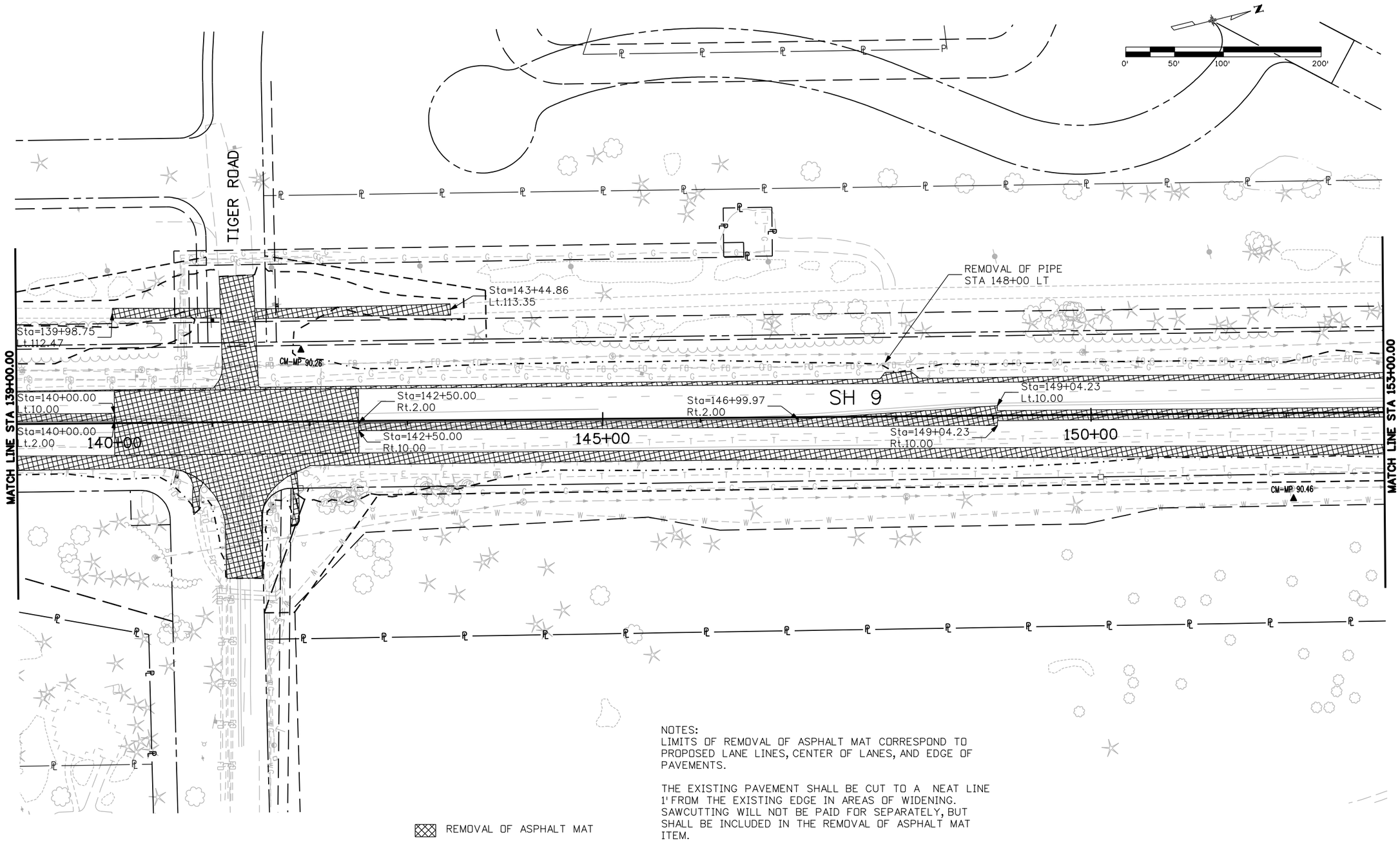


NOTES:
LIMITS OF REMOVAL OF ASPHALT MAT CORRESPOND TO PROPOSED LANE LINES, CENTER OF LANES, AND EDGE OF PAVEMENTS.

THE EXISTING PAVEMENT SHALL BE CUT TO A NEAT LINE 1' FROM THE EXISTING EDGE IN AREAS OF WIDENING. SAWCUTTING WILL NOT BE PAID FOR SEPARATELY, BUT SHALL BE INCLUDED IN THE REMOVAL OF ASPHALT MAT ITEM.

| | | | |
|---|---|---|---|
| Print Date: 1/16/2009 | | | |
| File Name: 16439Removal_Plan2.dgn | | | |
| Horiz. Scale: 1:100 | Vert. Scale: As Noted | R-X | |
| Unit Information | Unit Leader Initials | | |

Sheet Revisions

| Date: | Comments | Init. |
|---|---|---|
| | | |
| | | |
| | | |
| | | |

Colorado Department of Transportation
CDOT DEPARTMENT OF TRANSPORTATION
Mountain Residency P.O. Box 399
Dumont, CO 80436
Phone: 303-512-5750 FAX: 303-512-5775
Region 1 DCW

As Constructed
No Revisions:
Revised:
Void:

SH 9 REMOVAL PLAN
STA 139+00 TO 153+00

| | | | |
|---|---|---|---|
| Designer: | TJT | Structure Numbers | |
| Detailer: | TJT | | |
| Sheet Subset: | REMOVAL | Subset Sheets: | 2 OF 9 |

Project No./Code
STA 0091-035
16439
Sheet Number 56

tuttlet 2:00:11 PM C:\Projects\16439\Design\Drawings\16439Removal_Plan2.dgn

NOTES:
LIMITS OF REMOVAL OF ASPHALT MAT CORRESPOND TO PROPOSED LANE LINES, CENTER OF LANES, AND EDGE OF PAVEMENTS.

THE EXISTING PAVEMENT SHALL BE CUT TO A NEAT LINE 1' FROM THE EXISTING EDGE IN AREAS OF WIDENING. SAWCUTTING WILL NOT BE PAID FOR SEPARATELY, BUT SHALL BE INCLUDED IN THE REMOVAL OF ASPHALT MAT ITEM.

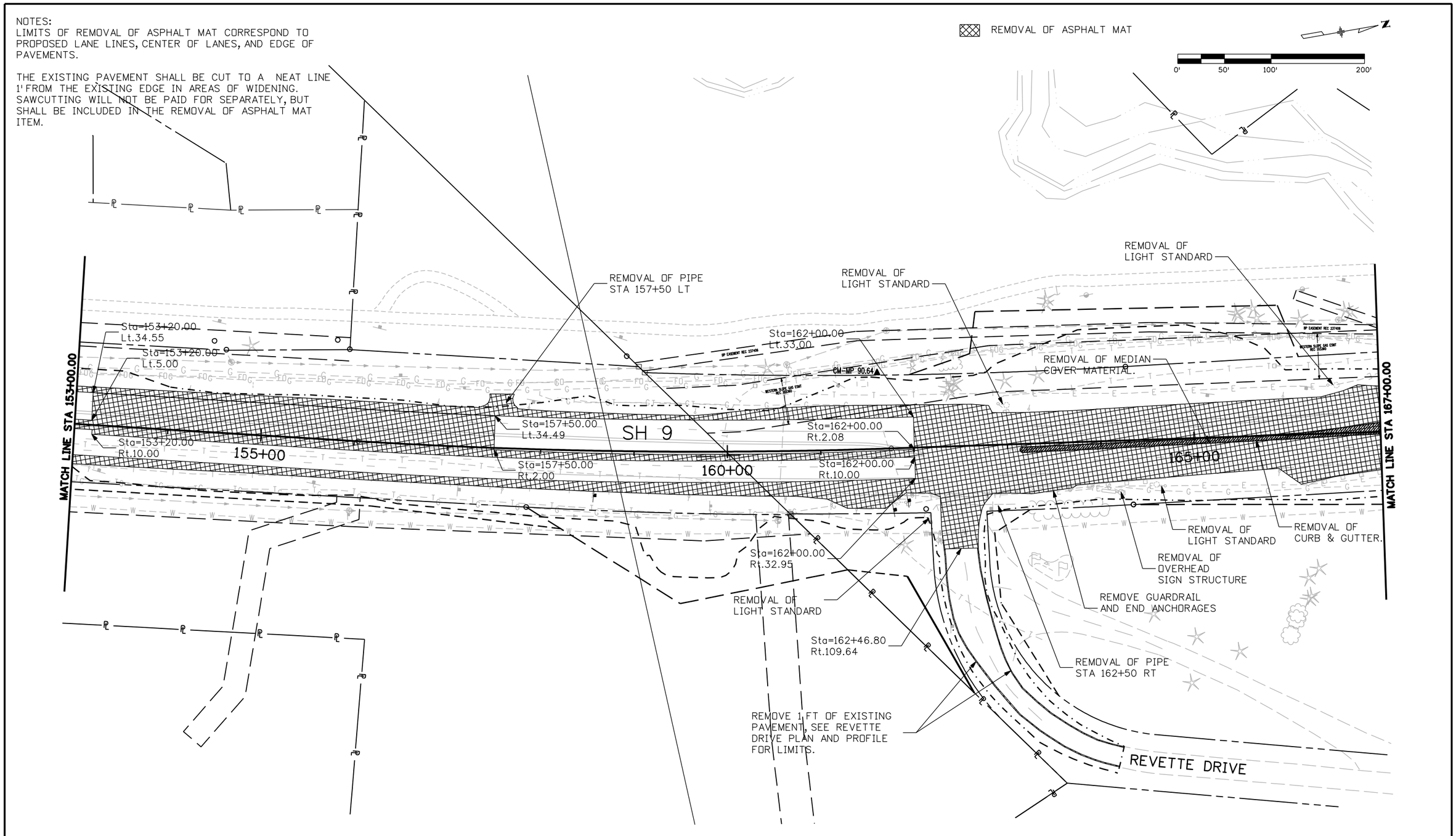


| | | | | | |
|---|---|---|---|---|---|
| Print Date: 1/16/2009 | Sheet Revisions | | | Colorado Department of Transportation | As Constructed |
| File Name: 16439Removal_Plan3.dgn | Date: | Comments | Init. | DOT Mountain Residency P.O. Box 399 Dumont, CO 80436 Phone: 303-512-5750 FAX: 303-512-5775 | No Revisions: |
| Horiz. Scale: 1:100 Vert. Scale: As Noted | R-X | | | Region 1 DCW | Revised: |
| Unit Information Unit Leader Initials | | | | | Void: |

| SH 9 REMOVAL PLAN STA 153+00 TO 167+00 | | | | Project No./Code |
|---|---|---|---|---|
| Designer: TJT | Structure Numbers | | | STA 0091-035 |
| Detailer: TJT | | | | 16439 |
| Sheet Subset: REMOVAL | Subset Sheets: 3 OF 9 | | | Sheet Number 57 |

tuttlet 2:00:54 PM C:\Projects\16439\Design\Drawings\16439Removal_Plan3.dgn

REMOVAL OF ASPHALT MAT

NOTES:
LIMITS OF REMOVAL OF ASPHALT MAT CORRESPOND TO PROPOSED LANE LINES, CENTER OF LANES, AND EDGE OF PAVEMENTS.

THE EXISTING PAVEMENT SHALL BE CUT TO A NEAT LINE 1' FROM THE EXISTING EDGE IN AREAS OF WIDENING. SAWCUTTING WILL NOT BE PAID FOR SEPARATELY, BUT SHALL BE INCLUDED IN THE REMOVAL OF ASPHALT MAT ITEM.

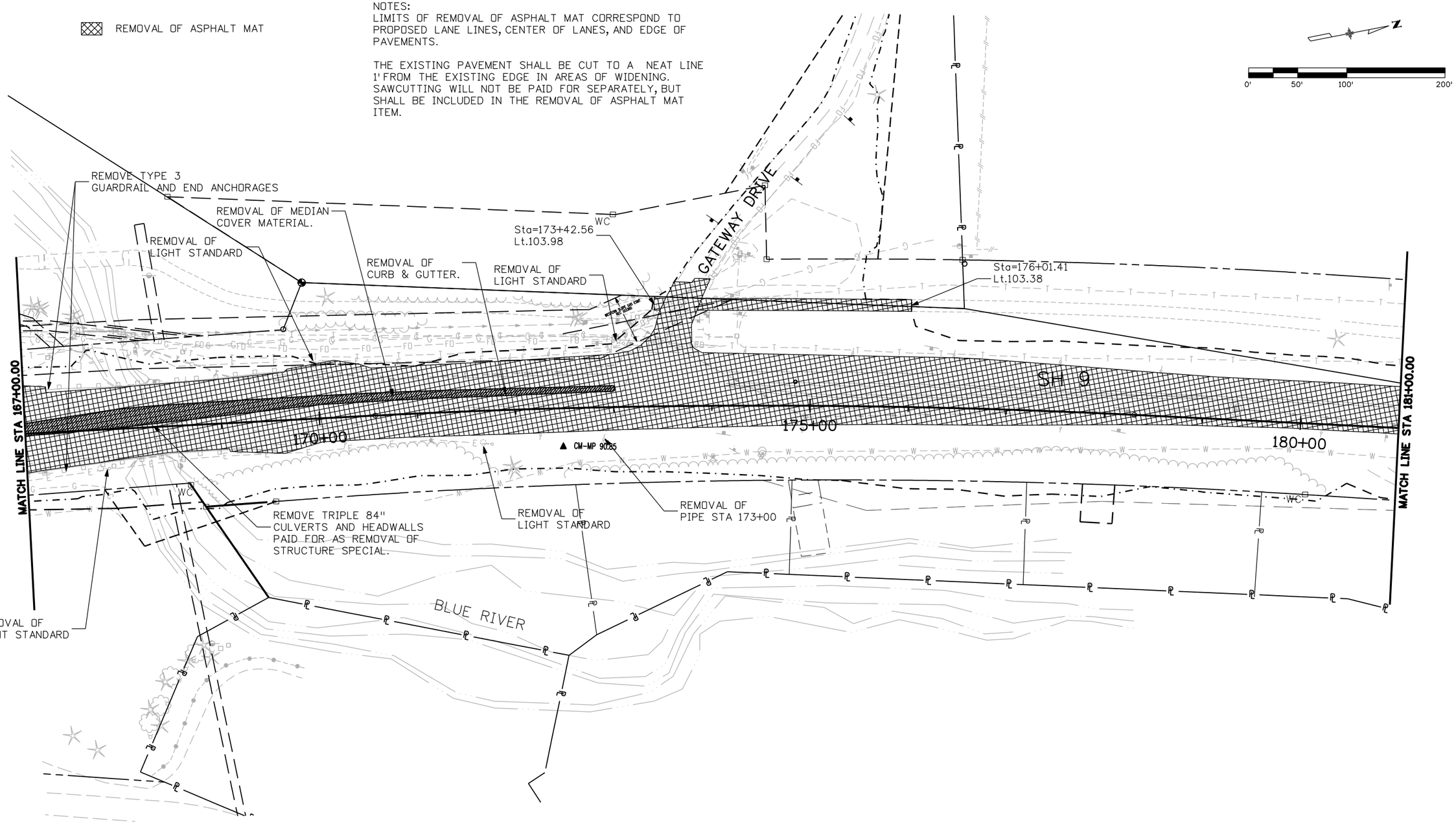


| | | | | | | |
|---|---|---|---|---|---|---|
| Print Date: 1/16/2009 | | Sheet Revisions | | | Colorado Department of Transportation | As Constructed |
| File Name: 16439Removal_Plan4.dgn | | Date: | Comments | Init. | DOT DEPARTMENT OF TRANSPORTATION | No Revisions: |
| Horiz. Scale: 1:100 Vert. Scale: As Noted | R-X | | | | Mountain Residency P.O. Box 399<br>Dumont, CO 80436<br>Phone: 303-512-5750 FAX: 303-512-5775 | Revised: |
| Unit Information Unit Leader Initials | | | | | Region 1 DCW | Void: |

| | | | |
|---|---|---|---|
| SH 9 REMOVAL PLAN<br>STA 167+00 TO 181+00 | | | Project No./Code |
| | | | STA 0091-035 |
| Designer: TJT | Structure Numbers | | 16439 |
| Detailer: TJT | | | |
| Sheet Subset: REMOVAL | Subset Sheets: 4 OF 9 | | Sheet Number 58 |

tutlet 2:02:02 PM C:\Projects\16439\Design\Drawings\16439Removal_Plan4.dgn

NOTES:
LIMITS OF REMOVAL OF ASPHALT MAT CORRESPOND TO PROPOSED LANE LINES, CENTER OF LANES, AND EDGE OF PAVEMENTS.

THE EXISTING PAVEMENT SHALL BE CUT TO A NEAT LINE 1' FROM THE EXISTING EDGE IN AREAS OF WIDENING. SAWCUTTING WILL NOT BE PAID FOR SEPARATELY, BUT SHALL BE INCLUDED IN THE REMOVAL OF ASPHALT MAT ITEM.

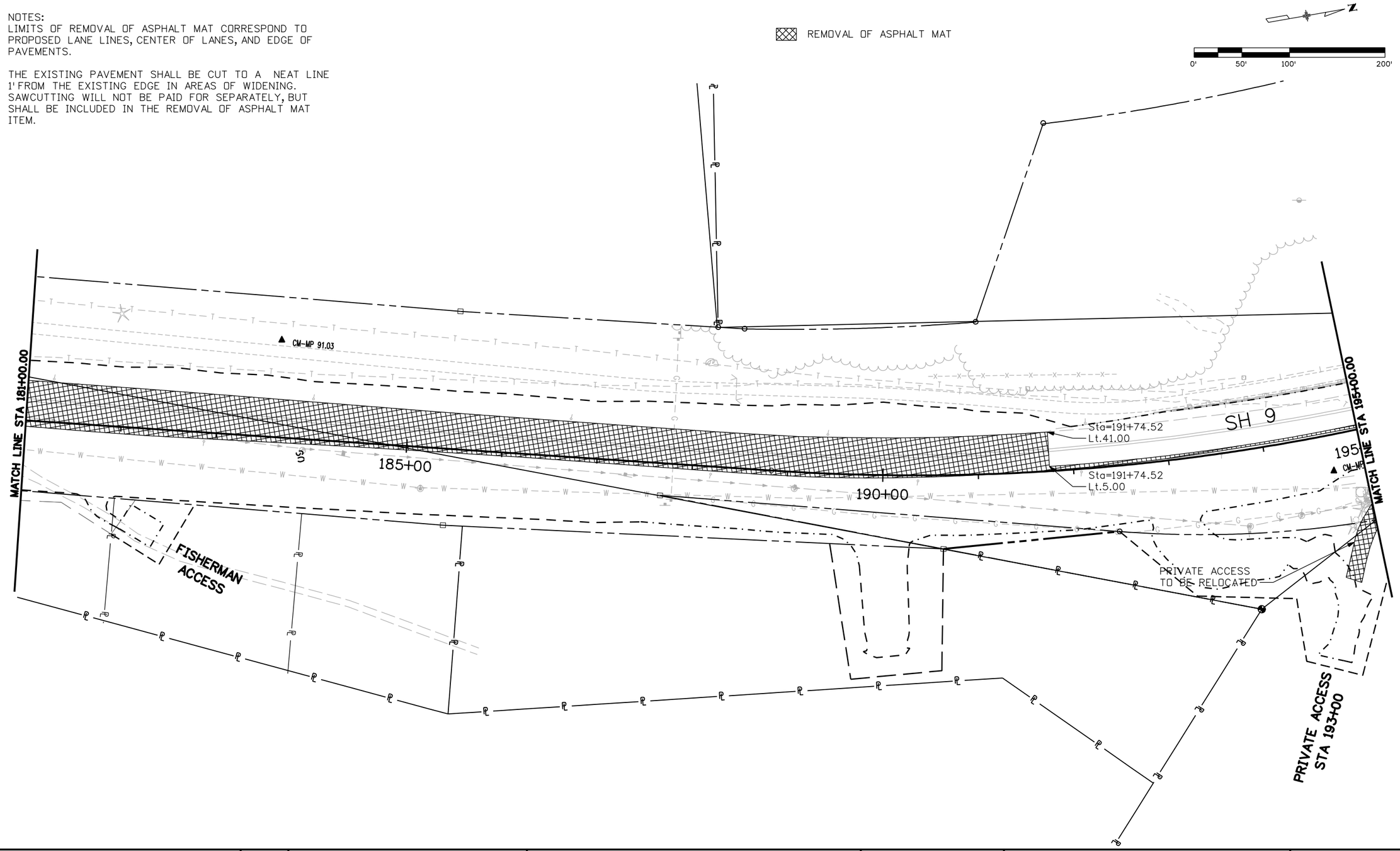


| | | | | | | |
|---|---|---|---|---|---|---|
| Print Date: 1/16/2009 | | Sheet Revisions | | | Colorado Department of Transportation | As Constructed |
| File Name: 16439Removal_Plan5.dgn | | Date: | Comments | Init. | DOT DEPARTMENT OF TRANSPORTATION | No Revisions: |
| Horiz. Scale: 1:100 Vert. Scale: As Noted | R-X | | | | Mountain Residency P.O. Box 399<br>Dumont, CO 80436<br>Phone: 303-512-5750 FAX: 303-512-5775 | Revised: |
| Unit Information Unit Leader Initials | | | | | Region 1 DCW | Void: |

| | | | |
|---|---|---|---|
| SH 9 REMOVAL PLAN<br>STA 181+00 TO 195+00 | | | Project No./Code |
| Designer: TJT | Structure Numbers | | STA 0091-035 |
| Detailer: TJT | | | 16439 |
| Sheet Subset: REMOVAL | Subset Sheets: 5 OF 9 | | Sheet Number 59 |

tuttlet 2:03:53 PM C:\Projects\16439\Design\Drawings\16439Removal_Plan5.dgn

NOTES:
LIMITS OF REMOVAL OF ASPHALT MAT CORRESPOND TO PROPOSED LANE LINES, CENTER OF LANES, AND EDGE OF PAVEMENTS.

THE EXISTING PAVEMENT SHALL BE CUT TO A NEAT LINE 1' FROM THE EXISTING EDGE IN AREAS OF WIDENING. SAWCUTTING WILL NOT BE PAID FOR SEPARATELY, BUT SHALL BE INCLUDED IN THE REMOVAL OF ASPHALT MAT ITEM.

REMOVAL OF ASPHALT MAT

0' 50' 100' 200'

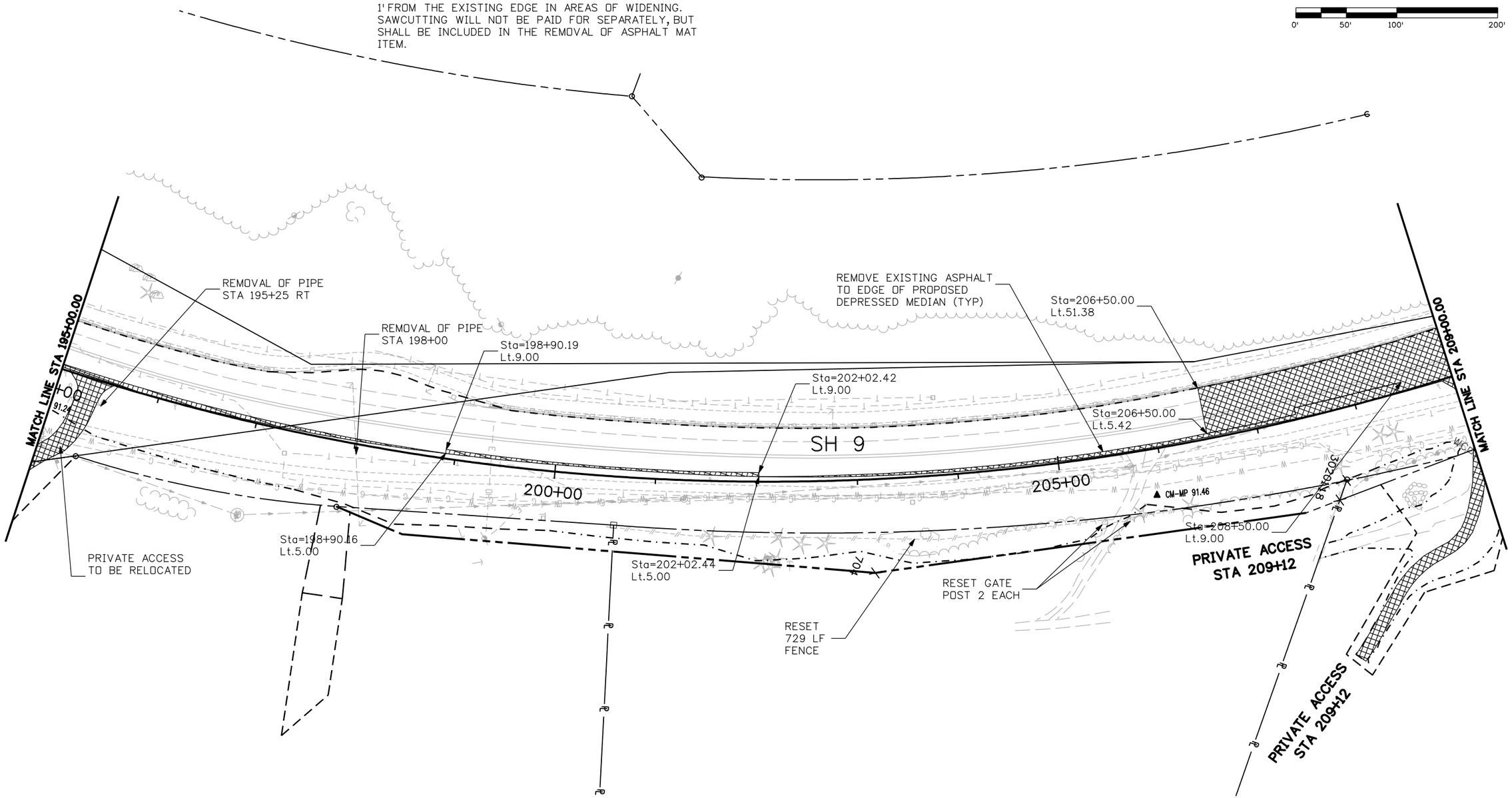


| | | | | | | |
|---|---|---|---|---|---|---|
| Print Date: 1/16/2009 | Sheet Revisions | Colorado Department of Transportation | As Constructed | SH 9 REMOVAL PLAN STA 195+00 TO 209+00 | | Project No./Code |
| File Name: 16439Removal_Plan6.dgn | Date: / Comments / Init. | Mountain Residency P.O. Box 399 Dumont, CO 80436 Phone: 303-512-5750 FAX: 303-512-5775 | No Revisions: | | | STA 0091-035 |
| Horiz. Scale: 1:100 Vert. Scale: As Noted | R-X | | Revised: | Designer: TJT / Structure Numbers | | 16439 |
| Unit Information Unit Leader Initials | | Region 1 DCW | Void: | Detailer: TJT | | |
| | | | | Sheet Subset: REMOVAL | Subset Sheets: 6 OF 9 | Sheet Number 60 |

tuttlet 2:06:45 PM C:\Projects\16439\Design\Drawings\16439Removal_Plan6.dgn

NOTES:
LIMITS OF REMOVAL OF ASPHALT MAT CORRESPOND TO PROPOSED LANE LINES, CENTER OF LANES, AND EDGE OF PAVEMENTS.

THE EXISTING PAVEMENT SHALL BE CUT TO A NEAT LINE 1' FROM THE EXISTING EDGE IN AREAS OF WIDENING. SAWCUTTING WILL NOT BE PAID FOR SEPARATELY, BUT SHALL BE INCLUDED IN THE REMOVAL OF ASPHALT MAT ITEM.

REMOVAL OF ASPHALT MAT

0' 50' 100' 200'

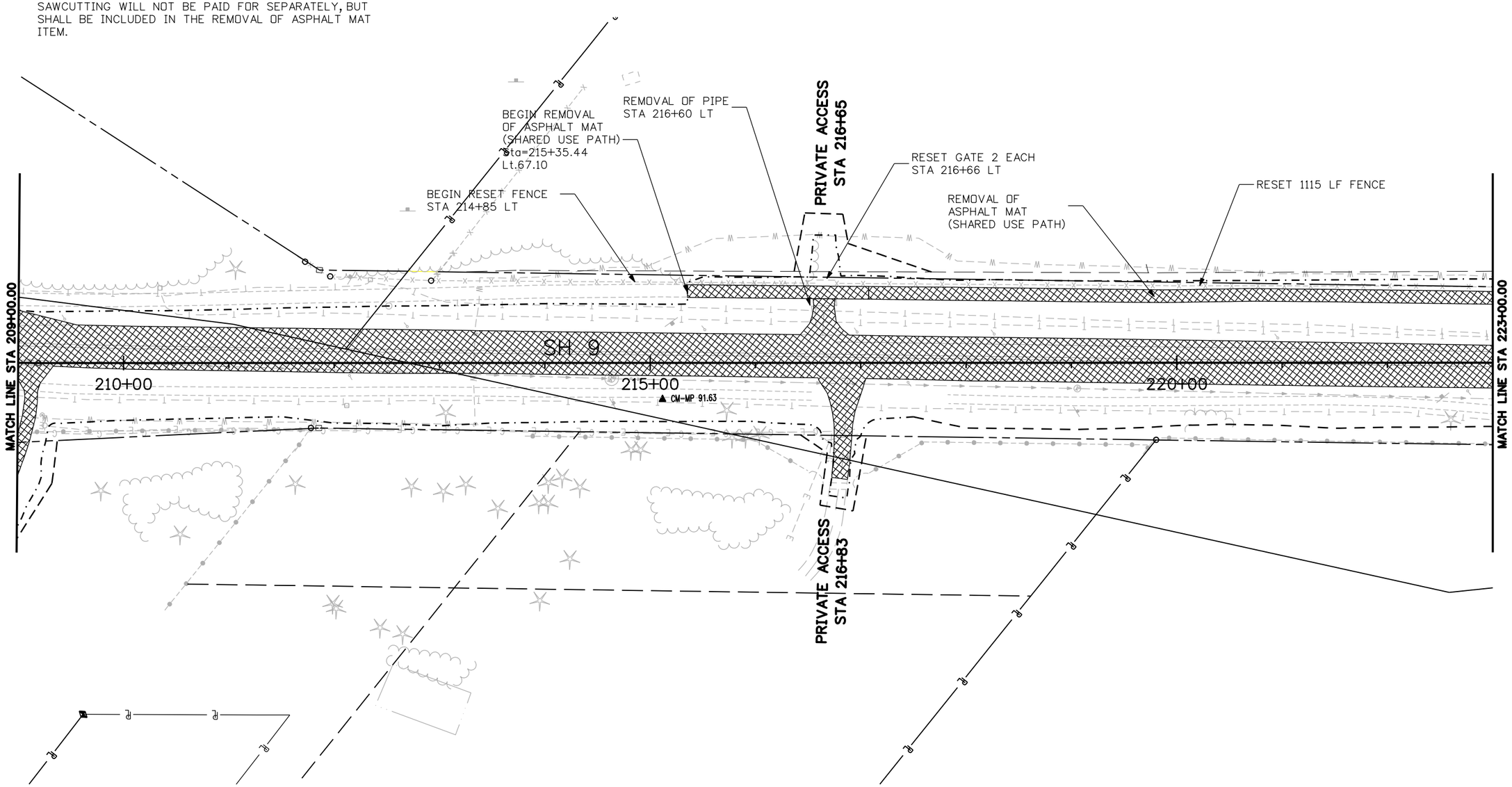


| | | | |
|---|---|---|---|
| Print Date: 1/16/2009 | | Sheet Revisions | |
| File Name: 16439Removal_Plan7.dgn | | Date: | Comments | Init. |
| Horiz. Scale: 1:100 | Vert. Scale: As Noted | R-X | | |
| Unit Information | Unit Leader Initials | | | |

Colorado Department of Transportation
DOT
Mountain Residency P.O. Box 399
Dumont, CO 80436
Phone: 303-512-5750 FAX: 303-512-5775
Region 1 DCW

As Constructed
No Revisions:
Revised:
Void:

SH 9 REMOVAL PLAN
STA 209+00 TO 223+00

| | | | |
|---|---|---|---|
| Designer: | TJT | Structure Numbers | |
| Detailer: | TJT | | |
| Sheet Subset: | REMOVAL | Subset Sheets: | 7 OF 9 |

Project No./Code
STA 0091-035
16439
Sheet Number 61

tuttlet 2:13:02 PM C:\Projects\16439\Design\Drawings\16439Removal_Plan7.dgn

NOTES:
LIMITS OF REMOVAL OF ASPHALT MAT CORRESPOND TO PROPOSED LANE LINES, CENTER OF LANES, AND EDGE OF PAVEMENTS.

THE EXISTING PAVEMENT SHALL BE CUT TO A NEAT LINE 1' FROM THE EXISTING EDGE IN AREAS OF WIDENING. SAWCUTTING WILL NOT BE PAID FOR SEPARATELY, BUT SHALL BE INCLUDED IN THE REMOVAL OF ASPHALT MAT ITEM.

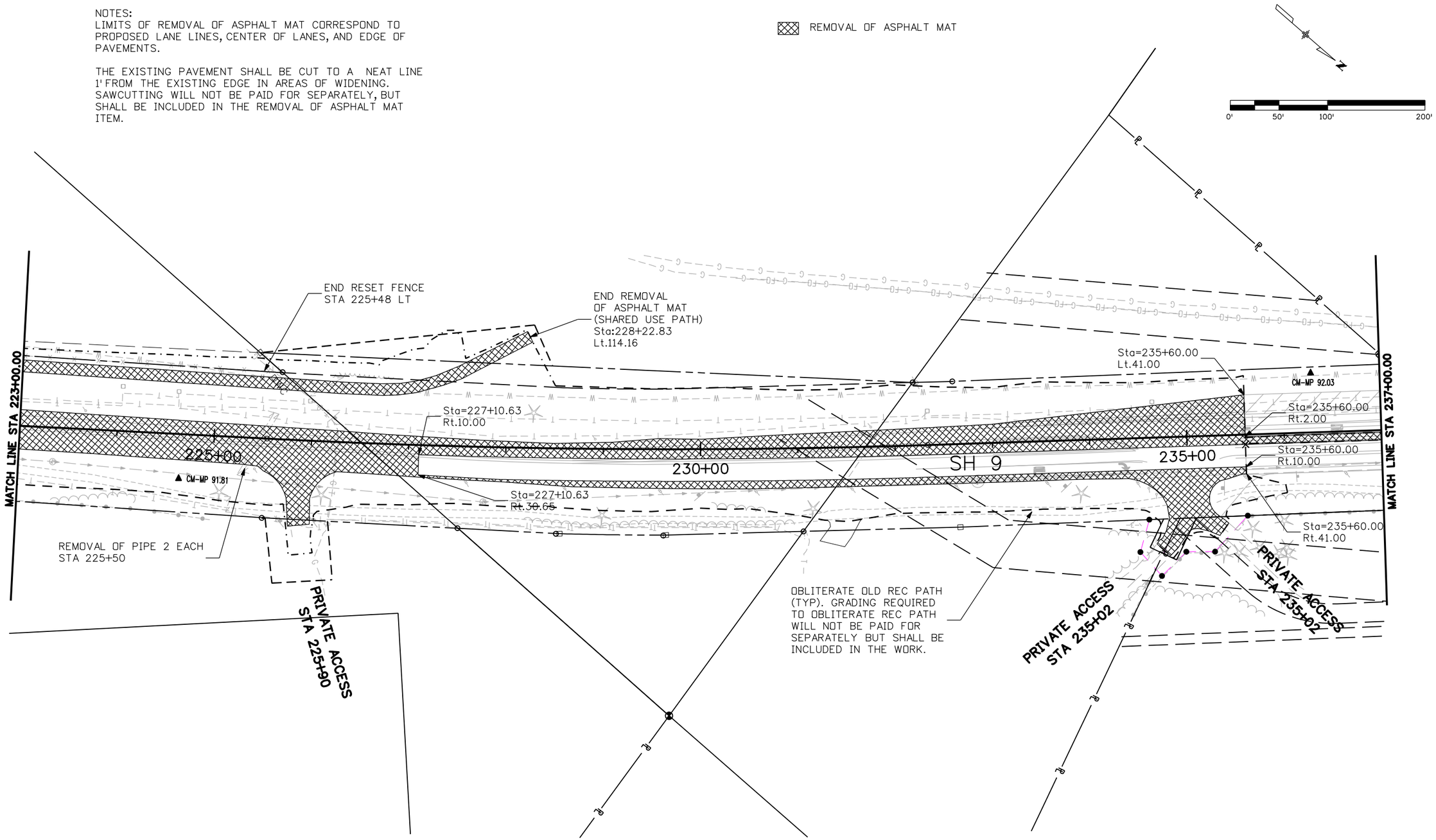


| | | | |
|---|---|---|---|
| Print Date: 1/16/2009 | Sheet Revisions | Colorado Department of Transportation | As Constructed |
| File Name: 16439Removal_Plan8.dgn | Date: / Comments / Init. | Mountain Residency P.O. Box 399 Dumont, CO 80436 Phone: 303-512-5750 FAX: 303-512-5775 | No Revisions: |
| Horiz. Scale: 1:100 Vert. Scale: As Noted | R-X | Region 1 DCW | Revised: |
| Unit Information Unit Leader Initials | | | Void: |

SH 9 REMOVAL PLAN
STA 223+00 TO 237+00

| | | | |
|---|---|---|---|
| Designer: | TJT | Structure Numbers | |
| Detailer: | TJT | | |
| Sheet Subset: | REMOVAL | Subset Sheets: | 8 OF 9 |

Project No./Code
STA 0091-035
16439
Sheet Number 62

tuttlet 2:18:46 PM C:\Projects\16439\Design\Drawings\16439Removal_Plan8.dgn

NOTES:
LIMITS OF REMOVAL OF ASPHALT MAT CORRESPOND TO PROPOSED LANE LINES, CENTER OF LANES, AND EDGE OF PAVEMENTS.

THE EXISTING PAVEMENT SHALL BE CUT TO A NEAT LINE 1' FROM THE EXISTING EDGE IN AREAS OF WIDENING. SAWCUTTING WILL NOT BE PAID FOR SEPARATELY, BUT SHALL BE INCLUDED IN THE REMOVAL OF ASPHALT MAT ITEM.

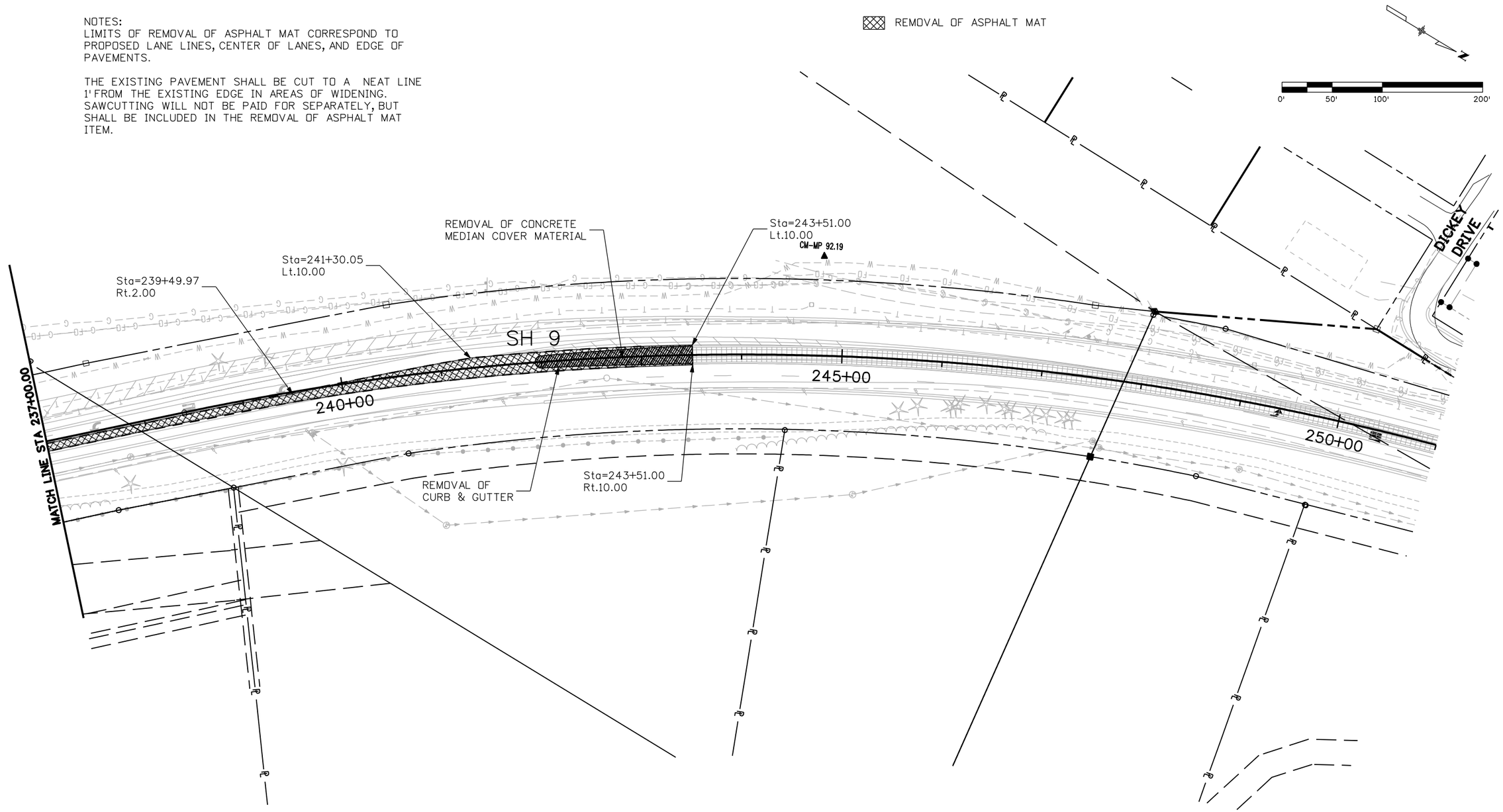


| | | | | | |
|---|---|---|---|---|---|
| Print Date: 1/16/2009 | | Sheet Revisions | | | |
| File Name: 16439Removal_Plan9.dgn | | Date: | Comments | Init. | |
| Horiz. Scale: 1:100 Vert. Scale: As Noted | R-X | | | | |
| Unit Information Unit Leader Initials | | | | | |

Colorado Department of Transportation
DOT DEPARTMENT OF TRANSPORTATION
Mountain Residency P.O. Box 399
Dumont, CO 80436
Phone: 303-512-5750 FAX: 303-512-5775
Region 1 DCW

As Constructed
No Revisions:
Revised:
Void:

SH 9 REMOVAL PLAN
STA 237+00 TO 251+00

| | | | |
|---|---|---|---|
| Designer: | TJT | Structure Numbers | |
| Detailer: | TJT | | |
| Sheet Subset: | REMOVAL | Subset Sheets: | 9 OF 9 |

Project No./Code
STA 0091-035
16439
Sheet Number 63

tuttlet 2:20:22 PM C:\Projects\16439\Design\Drawings\16439Removal_Plan9.dgn

## GENERAL NOTES

STRUCTURE EXCAVATION AND BACKFILL SHALL BE AS SHOWN ON THE PLANS, EXCEPT SHORING MAY BE REQUIRED FOR EXCAVATION ADJACENT TO THE EXISTING ROADWAY. TEMPORARY EXCAVATION SUPPORT SHALL BE PAID FOR BY ITEM 206 SHORING.

EXPANSION JOINT MATERIAL SHALL MEET AASHTO SPECIFICATION M213.

A COLORED STRUCTURAL CONCRETE COATING FINISH WILL BE REQUIRED, AS SHOWN ON THE PLANS, ON EXPOSED CONCRETE SURFACES. THE COLOR SHALL BE DARK COCOA BROWN EQUIVALENT TO FEDERAL STANDARD 595B COLOR NO. 30340 AND THESE COLORS SHALL BE SELECTED FROM TEST PANELS PROVIDED BY THE CONTRACTOR.

THE FINAL FINISH FOR THE SURFACES OF THE TYPE 7 BRIDGE RAIL AND CURBS SHALL BE CLASS 2. ALL OTHER EXPOSED CONCRETE SURFACES SHALL RECEIVE A CLASS 1 FINAL FINISH TO ONE FOOT BELOW THE GROUND LINE.

ALL STRUCTURAL STEEL NOT OTHERWISE NOTED SHALL BE PAINTED IN ACCORDANCE WITH SECTION 509 OF THE STANDARD SPECIFICATIONS. THE COLOR SHALL BE DARK COCOA BROWN, EQUIVALENT TO FEDERAL STANDARD 595B COLOR NO. 30340.

THE FOLLOWING STRUCTURAL STEEL SHALL BE AASHTO M270 GRADE 36 (ASTM A-36): DIAPHRAGM.

ALL BOLTS SHALL BE 7/8" DIAMETER, HIGH STRENGTH, UNLESS OTHERWISE NOTED.

GRADE 60 REINFORCING STEEL IS REQUIRED.

ALL REINFORCING STEEL SHALL BE EPOXY COATED UNLESS OTHERWISE NOTED.

(N) DENOTES NON COATED REINFORCING STEEL.

AN EMERGENCY DECK CONSTRUCTION JOINT MAY BE LOCATED AT THE ONE QUARTER SPAN POINT BACK FROM AN ABUTMENT WITH RESPECT TO THE DIRECTION OF THE DECK PLACEMENT.

## DESIGN DATA

AASHTO LRFD BRIDGE DESIGN SPECIFICATIONS, 4TH EDITION 2008 WITH CURRENT INTERIM

DESIGN METHOD: LOAD AND RESISTANCE FACTOR DESIGN

LIVE LOAD: HL-93 (DESIGN TRUCK OR TANDEM, AND DESIGN LANE LOAD)
DEAD LOAD: ASSUMES 36 LBS. PER SQ. FT. FOR BRIDGE DECK OVERLAY
ASSUMES 130 LBS. PER LN. FT. FOR UTILITIES

REINFORCED CONCRETE:

CLASS B CONCRETE: f'c= 4,500 psi

CLASS D CONCRETE: f'c= 4,500 psi

REINFORCING STEEL: fy= 60,000 psi

PILING:

STRUCTURAL STEEL: GRADE 50 fy = 50,000 psi

BRIDGE RAIL:

TEST LEVEL-4

THE FOLLOWING TABLE GIVES THE MINIMUM LAP SPLICE LENGTH FOR EPOXY COATED REINFORCING BARS PLACED IN ACCORDANCE WITH SUBSECTION 602.06. THESE SPLICE LENGTHS SHALL BE INCREASED BY 25% FOR BARS SPACED AT LESS THAN 6" ON CENTER.

| BAR SIZE | #4 | #5 | #6 | #7 | #8 | #9 | #10 | #11 |
|---|---|---|---|---|---|---|---|---|
| SPLICE LENGTH FOR CLASS B & D CONCRETE | 1'-3" | 1'-7" | 2'-5" | 2'-10" | 3'-8" | 4'-8" | 5'-11" | 7'-3" |

WHEN THE CONTRACTOR ELECTS TO SUBSTITUTE EPOXY COATED REINFORCEMENT FOR BLACK REINFORCING BARS, THE MINIMUM LAP SPLICE SHALL BE AS DESCRIBED ABOVE.

THE FOLLOWING TABLE GIVES THE MINIMUM LAP SPLICE LENGTH FOR BLACK REINFORCING BARS PLACED IN ACCORDANCE WITH SUBSECTION 602.06. THESE SPLICE LENGTHS SHALL BE INCREASED BY 25% FOR BARS SPACED AT LESS THAN 6" ON CENTER.

| BAR SIZE | #4 | #5 | #6 | #7 | #8 | #9 | #10 | #11 |
|---|---|---|---|---|---|---|---|---|
| SPLICE LENGTH FOR CLASS B & D CONCRETE | 1'-1" | 1'-4" | 1'-7" | 1'-11" | 2'-6" | 3'-1" | 3'-11" | 4'-10" |

THE ABOVE SPLICE LENGTHS SHALL BE INCREASED BY 20 PERCENT FOR 3 BAR BUNDLES AND 33 PERCENT FOR 4 BAR BUNDLES.

THE ABOVE SPLICE LENGTHS MAY BE REDUCED BY 20% WHEN 3" OF CLEAR COVER EXISTS AND BAR SPACING IS 6" OR GREATER ON CENTER.

THE CONTRACTOR SHALL BE RESPONSIBLE FOR THE STABILITY OF THE STRUCTURE DURING CONSTRUCTION.

PERMANENT DECK FORMS ARE OPTIONAL.

PERMANENT STEEL DECK FORMS ARE NOT ALLOWED.

FOR STRUCTURE NUMBER INSTALLATION, SEE STANDARD S-614-12.

STATIONS, ELEVATIONS, AND DIMENSIONS CONTAINED IN THESE PLANS ARE CALCULATED FROM A RECENT FIELD SURVEY. THE CONTRACTOR SHALL VERIFY ALL DEPENDENT DIMENSIONS IN THE FIELD BEFORE ORDERING OR FABRICATING ANY MATERIAL.

THE INFORMATION SHOWN ON THESE PLANS CONCERNING THE TYPE AND LOCATION OF UNDERGROUND UTILITIES IS NOT GUARANTEED TO BE ACCURATE OR ALL INCLUSIVE. THE CONTRACTOR IS RESPONSIBLE FOR MAKING HIS OWN DETERMINATION AS TO THE TYPE AND LOCATION OF UNDERGROUND UTILITIES AS MAY BE NECESSARY TO AVOID DAMAGE THERETO. THE CONTRACTOR SHALL CONTACT THE UTILITY NOTIFICATION CENTER OF COLORADO AT 1-800-922-1987 AT LEAST 2 DAYS (NOT INCLUDING THE DAY OF NOTIFICATION) PRIOR TO ANY EXCAVATION OR OTHER EARTHWORK.

PRECAST PRESTRESSED CONCRETE:
CLASS PS CONCRETE f'c = (SEE DETAILS)
f's = 270,000 psi

## INDEX OF DRAWINGS


B01 GENERAL INFORMATION
B02 SUMMARY OF QUANTITIES
B03 GENERAL LAYOUT
B04 CONSTRUCTION PHASING
B05 ENGINEERING GEOLOGY
B06 BRIDGE HYDRAULIC INFORMATION
B07 BRIDGE HYDRAULIC INFORMATION
B08 CONSTRUCTION LAYOUT
B09 PILING LAYOUT
B10 ABUTMENT 1 AND 2
B11 ABUTMENT DETAILS
B12 WINGWALL DETAILS
B13 SUPERSTRUCTURE DETAILS
B14 DECK REINFORCING DETAILS
B15 PRESTRESSED CONCRETE I (SHEET 1 OF 2)
B16 PRESTRESSED CONCRETE I (SHEET 2 OF 2)
B17 PRECAST PANEL DECK FORM (SHEET 1 OF 2)
B18 PRECAST PANEL DECK FORM (SHEET 2 OF 2)
B19 BRIDGE RAIL TYPE 7 (SHEET 1 OF 2)
B20 BRIDGE RAIL TYPE 7 (SHEET 2 OF 2)
B21 EXCAVATION AND BACKFILL FOR BRIDGES IN CUT
B22 MECHANICALLY STABILIZED BACKFILL
B23 BRIDGE DECK ELEVATIONS (SHEET 1 OF 3)
B24 BRIDGE DECK ELEVATIONS (SHEET 2 OF 3)
B25 BRIDGE DECK ELEVATIONS (SHEET 3 OF 3)


DESIGN PROGRESS PLAN SET
NOT FOR CONSTRUCTION

## BRIDGE DESCRIPTION

1-SIMPLE SPAN (80'-0") BRIDGE, CONCRETE SLAB AND PRESTRESSED GIRDER (BT42).

OVER BLUE RIVER
90'-0" ROADWAY CURB TO CURB 17° 26'22"
SKEW
TYPE 7 BRIDGE RAIL.


811 Know what's below. Call before you dig.
FOR BURIED UTILITY INFORMATION
TWO (2) BUSINESS DAYS BEFORE YOU DIG
UTILITY NOTIFICATION CENTER OF COLORADO (UNCC)


BXX / XX
CROSS REFERENCE DRAWING NUMBER (IF BLANK, REFERENCE IS TO SAME SHEET)
SECTION OR DETAIL IDENTIFICATION

Station 167+77.19 to Station 168+59.81

| Revision Dates (Preliminary Stage Only) | | | | | | |
|---|---|---|---|---|---|---|
| 3/99 | 4/99 | 11/99 | 5/00 | 4/02 | 6/04 | 2/06 | 3/07 |

| Design | | | Detail | | | | Quantities | | | |
|---|---|---|---|---|---|---|---|---|---|---|
| | INITIAL | DATE | | INITIAL | DATE | | INITIAL | DATE |
| Designed By | PPC | 09/07 | Detailed By | JSV | 9/07 | Quantities By | JSV | 11/07 |
| Checked By | MCY | 09/07 | Checked By | PPC | 11/07 | Checked By | PPC | 11/07 |

| | | | |
|---|---|---|---|
| Print Date: 8/29/2008 | | | |
| Drawing File Name: 01 Notes F-12-BW.dgn | | | |
| Horiz. Scale: 1:1 | Vert. Scale: N/A | | |
| Staff Bridge Branch - Unit 0221 | Unit Leader STW | | |

Sheet Revisions

| Date: | Comments | Init. |
|---|---|---|
| | | |
| | | |
| | | |
| | | |


Colorado Department of Transportation
4201 East Arkansas Avenue
Room 107
Denver, CO 80222
Phone: 303-512-4072 FAX: 303-757-9197
Staff Bridge Branch STW


As Constructed
No Revisions:
Revised:
Void:

GENERAL INFORMATION

| | | | |
|---|---|---|---|
| Near Breckenridge | Sec. 7 | T 65 | R 77W |
| Designer: P. Chomsrimake | Structure Numbers | F-12-BW | |
| Detailer: C. Lenway | | | |
| Sheet Subset: Bridge | Subset Sheets: B01 of 25 | | |

Project No./Code
STA 0091-035
16439
Sheet Number 64

## SUMMARY OF QUANTITIES

| Item No. | Description | Unit | Super Structure | Abut. 1 | Abut. 2 | Total |
|---|---|---|---|---|---|---|
| 202 | Removal of Bridge | EA | 1 | | | 1 |
| | | | | | | |
| 206 | Structure Excavation | CY | | 130 | 138 | 268 |
| 206 | Structure Backfill (Flow-Fill) | CY | | 53 | 53 | 106 |
| 206 | Structure Backfill (Class 1) | CY | | 314 | 309 | 623 |
| 206 | Structure Backfill (Class 2) | CY | | 93 | 72 | 165 |
| 206 | Mechanical Reinforcement of Soil | CY | | 314 | 309 | 623 |
| ① 206 | Shoring | LS | | 0.5 | 0.5 | 1 |
| | | | | | | |
| 403 | Hot Mix Asphalt (Grade SX) (75) (PG 58-34) | Ton | 125 | | | 125 |
| | | | | | | |
| 502 | Pile Tip | EA | | 12 | 12 | 24 |
| 502 | Dynamic Load Testing | LS | | 0.5 | 0.5 | 1 |
| 502 | Steel Piling (HP 14X89) | LF | | 504 | 470 | 974 |
| | | | | | | |
| 515 | Waterproofing (Membrane) | SY | 751 | | | 751 |
| | | | | | | |
| 601 | Concrete Class D (Bridge) | CY | 281 | 49 | 51 | 381 |
| 601 | Structural Concrete Stain | SY | 322 | 40 | 40 | 402 |
| | | | | | | |
| 602 | Reinforcing Steel (Epoxy Coated) | LB | 80,310 | 6,735 | 6,725 | 93,770 |
| | | | | | | |
| 606 | Bridge Rail Type 7 | LF | 203 | | | 203 |
| | | | | | | |
| 609 | Curb Type 4 (Section M) | LF | 164 | | | 164 |
| | | | | | | |
| 610 | Median Cover Material (Concrete) | SF | 307 | | | 307 |
| | | | | | | |
| 613 | 2 Inch Electrical Conduit | LF | 207 | | | 207 |
| 613 | 3 Inch Electrical Conduit | LF | 414 | | | 414 |
| | | | | | | |
| 618 | Prestressed Concrete I (BT42) | LF | 728 | | | 728 |

Note: Total Deck Area = 9,684 SF

① Shoring shall be designed by the contractor. See Dwg. No. B04 for information only.

| Design | INITIAL | DATE | Detail | INITIAL | DATE | Quantities | INITIAL | DATE |
|---|---|---|---|---|---|---|---|---|
| Designed By | PPC | 09/07 | Detailed By | JSV | 10/07 | Quantities By | JSV | 11/07 |
| Checked By | MCY | 09/07 | Checked By | PPC | 11/07 | Checked By | PPC | 11/07 |

Revision Dates (Preliminary Stage Only)
MM/YY

Print Date: 9/19/2008
Drawing File Name: 02 SUM OF QUAN.DGN
Horiz. Scale: 1:1 Vert. Scale: As Noted
Staff Bridge Branch - Unit 0221 Unit Leader STW

R-X

Sheet Revisions

| Date: | Comments | Init. |
|---|---|---|
| | | |
| | | |
| | | |
| | | |

Colorado Department of Transportation
4201 East Arkansas Avenue
Room 107
Denver, CO 80222
Phone: 303-512-4072 FAX: 303-757-9197
Staff Bridge Branch STW

As Constructed
No Revisions:
Revised:
Void:

SUMMARY OF QUANTITIES

Designer: P. Chomsrimake
Detailer: C. Lenway
Sheet Subset: Bridge
Structure Numbers: F-12-BW
Subset Sheets: B02 of 25

Project No./Code
STA 0091-035
16439
Sheet Number 65

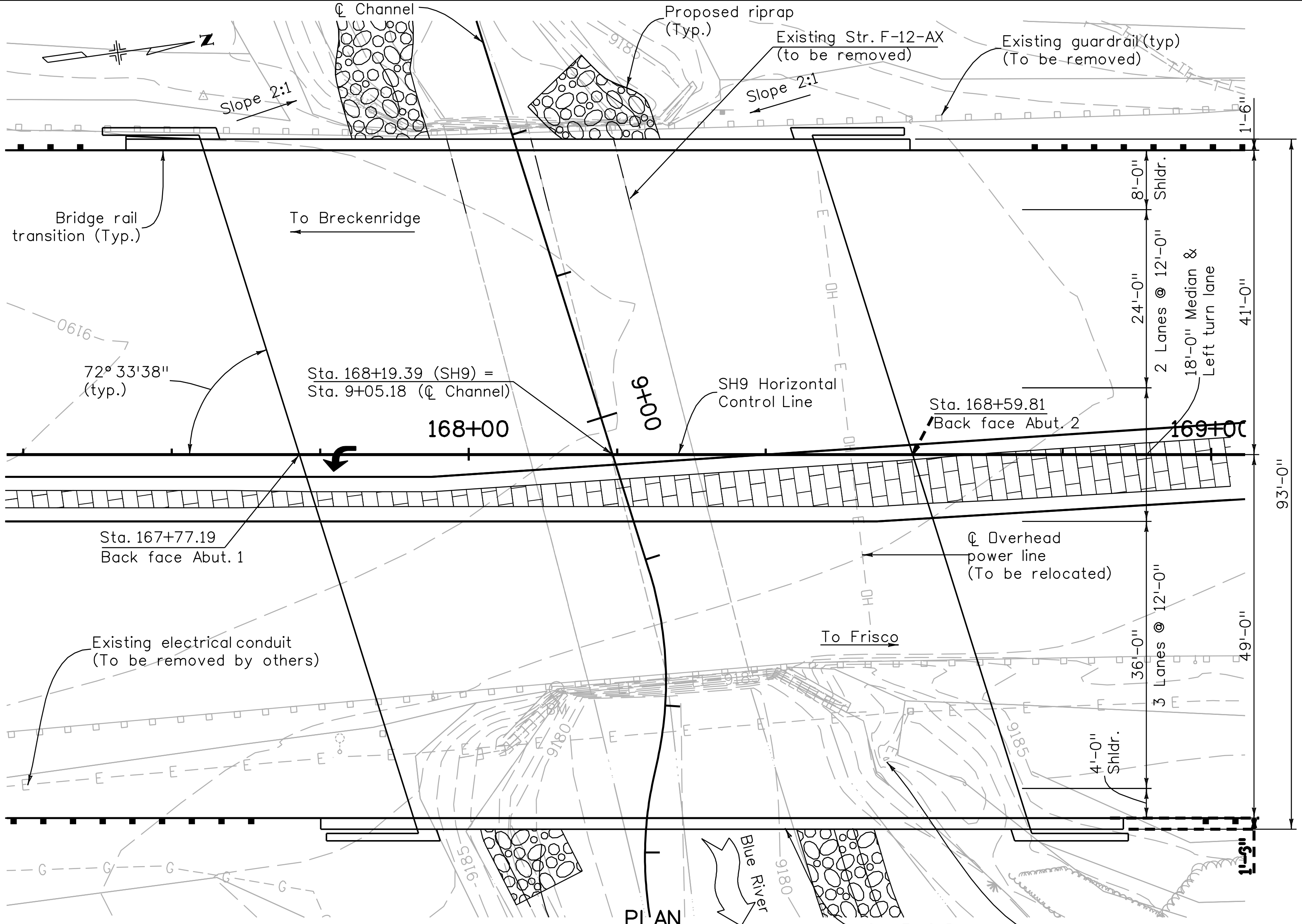


PLAN

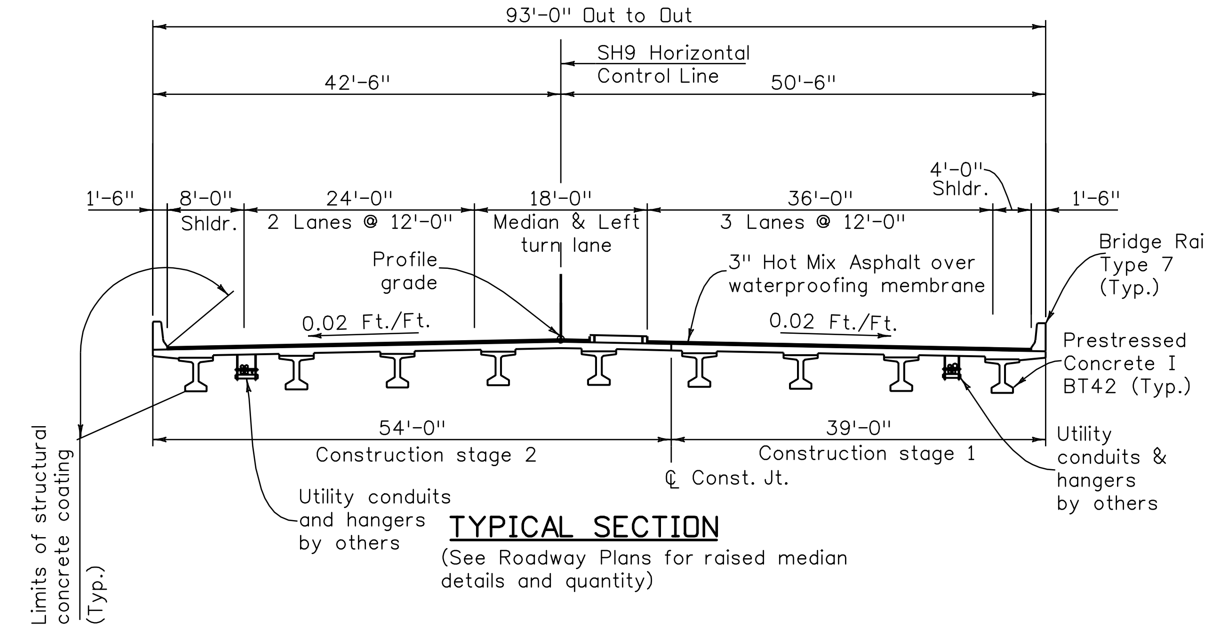


TYPICAL SECTION

(See Roadway Plans for raised median details and quantity)

Hydraulic Data

| | |
|---|---|
| DA | = 53 sq.mi. |
| Q100 | = 900 cfs |
| DHW100 | = 9184.3 ft. |
| V100 | = 13.1 fps |
| Q500 | = 1400 cfs |
| HW500 | = 9185.2 ft. |
| V500 | = 14.7 fps |
| Min. FB | = 2.3 ft. |

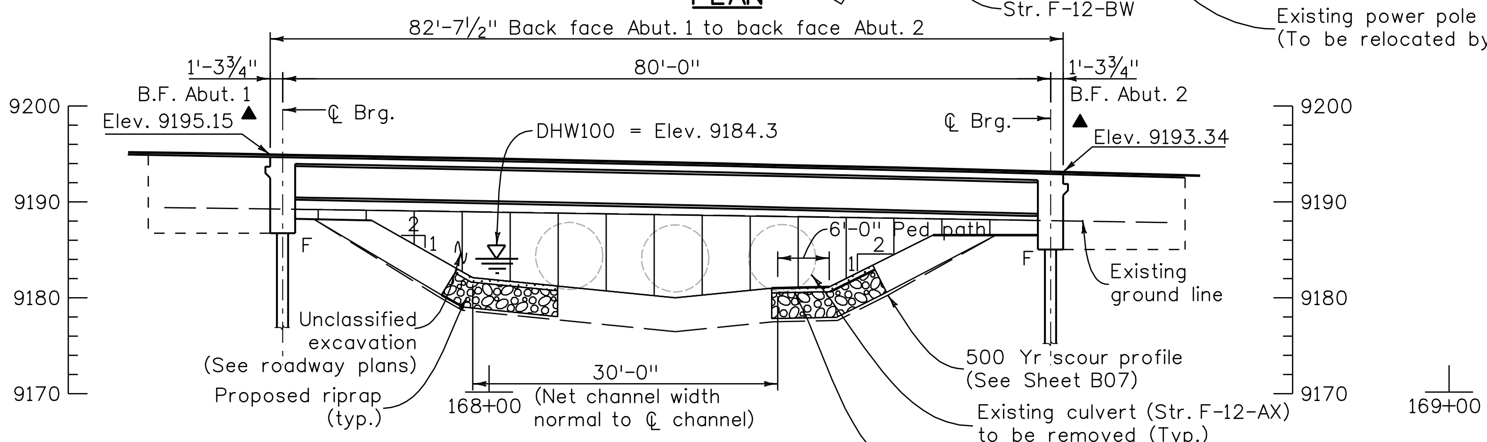


SECTION

(Taken at Horizontal Control Line)

▲ = Finished grade elevations

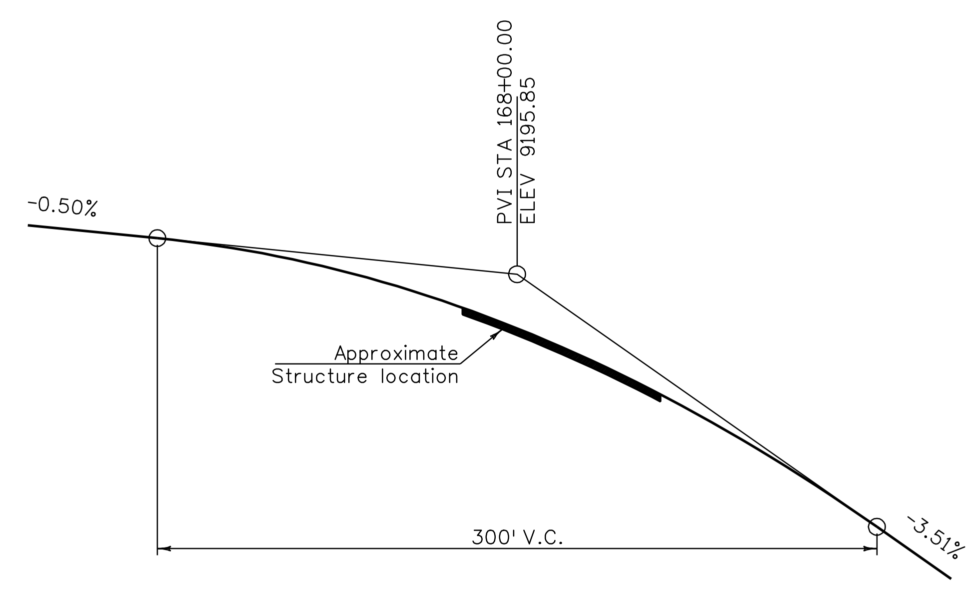


PROFILE GRADE

| Design | | | Detail | | | Quantities | | |
|---|---|---|---|---|---|---|---|---|
| | INITIAL | DATE | | INITIAL | DATE | | INITIAL | DATE |
| Designed By | PPC | 09/07 | Detailed By | JSV | 10/07 | Quantities By | JSV | 11/07 |
| Checked By | MCY | 09/07 | Checked By | PPC | 11/07 | Checked By | PPC | 11/07 |

Revision Dates (Preliminary Stage Only) MM/YY

| | |
|---|---|
| Print Date: 9/19/2008 | |
| File Name: 03 General Layout F-12-BW.dgn | |
| Horiz. Scale: 1:1 | Vert. Scale: As Noted |
| Staff Bridge Branch - Unit 0221 | Unit Leader STW |

Sheet Revisions

| Date: | Comments | Init. |
|---|---|---|
| | | |
| | | |
| | | |
| | | |


Colorado Department of Transportation
4201 East Arkansas Avenue
Room 107
Denver, CO 80222
Phone: 303-512-4072 FAX: 303-757-9197
Staff Bridge Branch STW


As Constructed
No Revisions:
Revised:
Void:

GENERAL LAYOUT

| | | | |
|---|---|---|---|
| Designer: P. Chomsrimake | | Structure Numbers | F-12-BW |
| Detailer: C. Lenway | | | |
| Sheet Subset: Bridge | | Subset Sheets: | B03 of 25 |

Project No./Code
STA 0091-035
16439

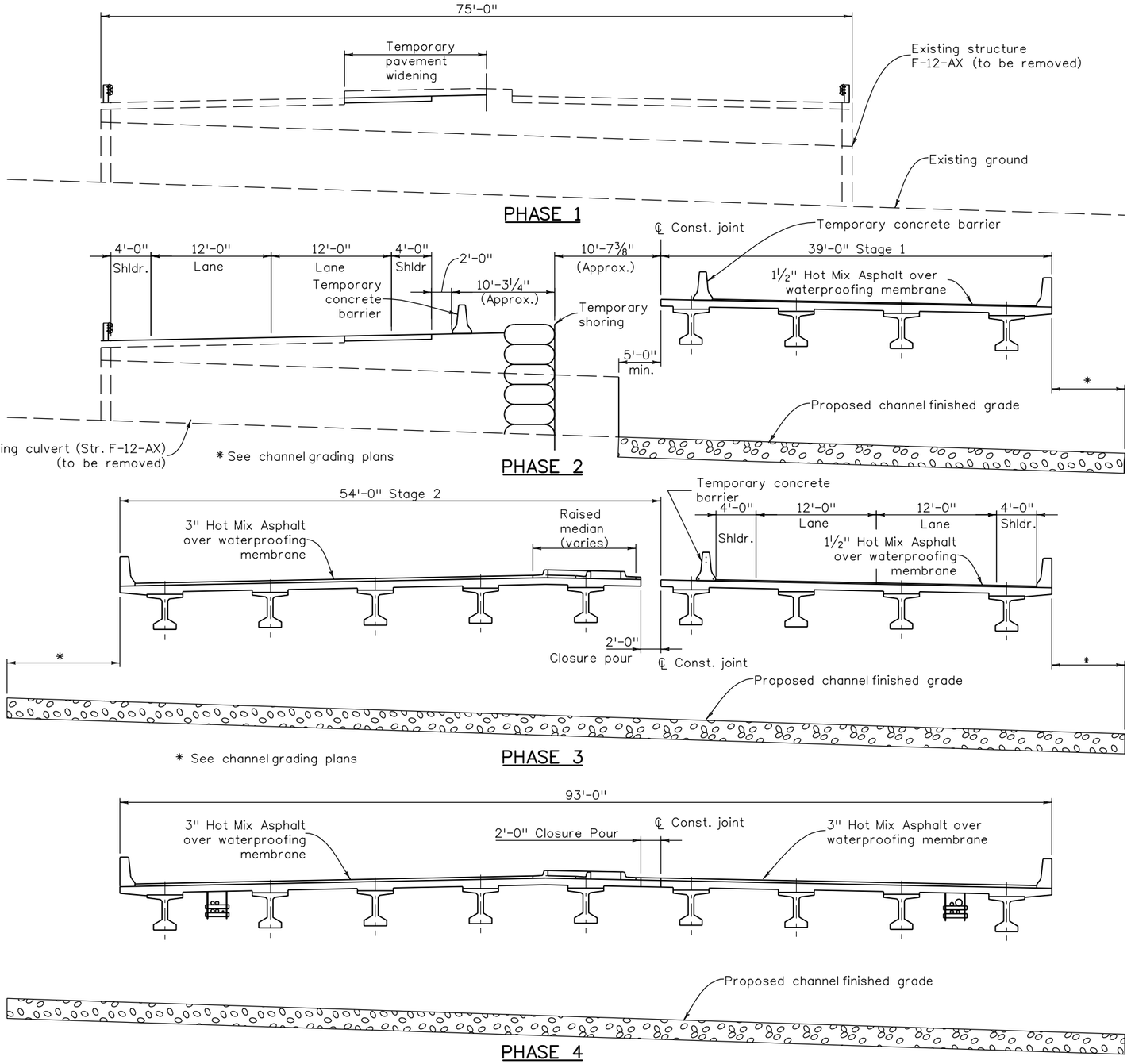


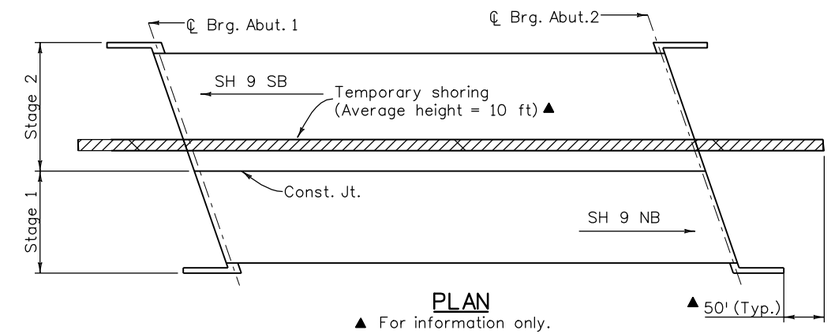


PLAN

▲ For information only.

## PHASE 1

1. Remove existing raised median and curb and gutter along existing SH 9.

2. Construct temporary pavement widening along existing southbound SH 9 with a minimum of 4'-0" shoulder on each side and two 12'-0" traffic lanes.

## PHASE 2

1. Shift all traffic to widened southbound SH9. Provide traffic control as necessary.

2. Remove existing northbound SH9 and eastern portion of existing structure including roadway embankment. Divert river flow as necessary. Provide and design temporary shoring as necessary.

3. Perform rough grading of channel restoration.

4. Construct stage 1 of the new bridge and place riprap in the stage 1 construction zone.

5. Install 1½" overlay and waterproofing membrane on deck.

## PHASE 3

1. Shift all traffic to stage 1 of the new bridge. Provide temporary traffic control and temporary shoring as necessary.

2. Remove existing southbound SH9 and western portion of existing structure including roadway embankment. Provide temporary shoring as necessary.

3. Complete final channel restoration.

4. Construct stage 2 of the new bridge, except closure pour and place riprap in the stage 2 zone.

5. Place asphalt wearing surface over waterproofing membrane on the stage 2 portion of the bridge.

## PHASE 4

1. Divert all traffic to the stage 2 portion of the bridge. Provide temporary traffic control as necessary.

2. Construct 2'-0" closure pour.

3. Place the rest of asphalt wearing surface over waterproofing membrane on the completed stage 1 of the bridge.

4. Open the entire bridge to traffic.

| Design | INITIAL | DATE |
|---|---|---|
| Designed By | PPC | 09/07 |
| Checked By | MCY | 09/07 |

| Detail | INITIAL | DATE |
|---|---|---|
| Detailed By | JSV | 10/07 |
| Checked By | PPC | 11/07 |

| Quantities | INITIAL | DATE |
|---|---|---|
| Quantities By | JSV | 11/07 |
| Checked By | PPC | 11/07 |

| Revision Dates | (Preliminary Stage Only) |
|---|---|
| MM/YY | |

Print Date: 8/25/2008
File Name: 04 Construction Phasing.dgn
Horiz. Scale: 1:12 Vert. Scale: 1:1
Staff Bridge Branch - Unit 0221 STW

| Sheet Revisions | | |
|---|---|---|
| Date: | Comments | Init. |
| | | |
| | | |
| | | |
| | | |


Colorado Department of Transportation
4201 East Arkansas Avenue
Room 107
Denver, CO 80222
Phone: 303-512-4072 FAX: 303-757-9197
Staff Bridge Branch STW


As Constructed
No Revisions:
Revised:
Void:

# CONSTRUCTION PHASING

Designer: P.Chomsrimake
Detailer: C. Lenway
Sheet Subset: Bridge
Structure Numbers: F-12-BW
Subset Sheets: B04 of 25

Project No./Code
STA 0091-035
16439
Sheet Number 67

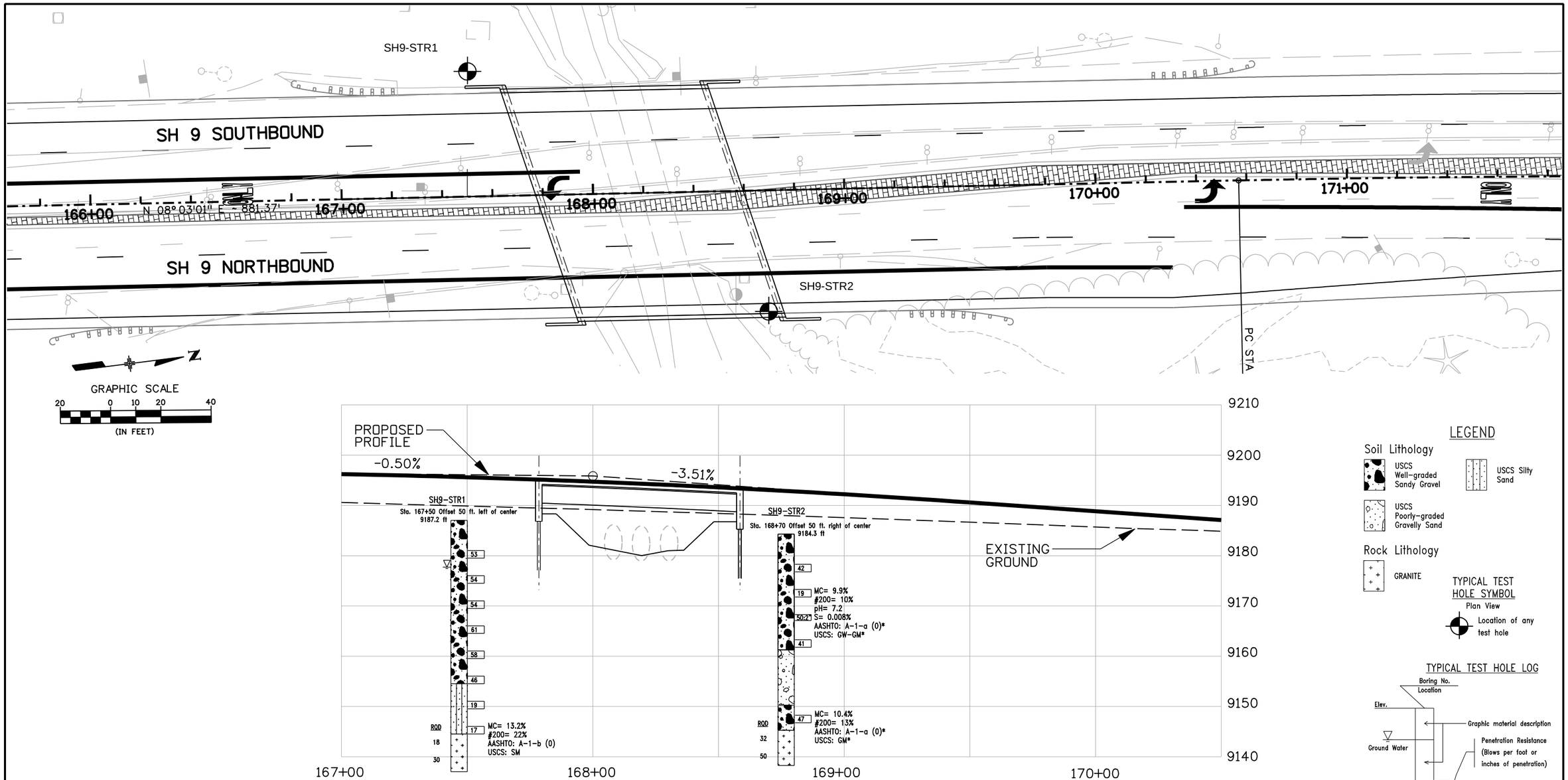


## LEGEND

**Soil Lithology**

- USCS Well-graded Sandy Gravel
- USCS Poorly-graded Gravelly Sand
- USCS Silty Sand

**Rock Lithology**

- GRANITE

**TYPICAL TEST HOLE SYMBOL**

Plan View

Location of any test hole

**TYPICAL TEST HOLE LOG**

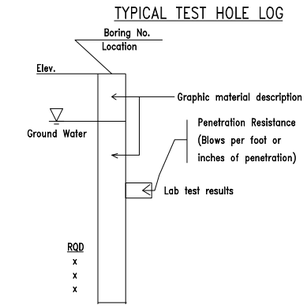


## SUMMARY OF TEST RESULTS

| Boring Number | Depth (feet) | Sample Type | Natural Moisture Content (%) | Natural Dry Density (pcf) | Grading Analysis (AASHTO) Percent: Gravel | Sand | Fines #200 | Atterberg Limits: Liquid Limit $L_W$ | Plastic Limit $P_W$ | Plastic Index $I_W$ | Water Soluble Sulphate % | pH | Unconf. Comp. Strength (psf) | Classification: AASHTO | USCS |
|---|---|---|---|---|---|---|---|---|---|---|---|---|---|---|---|
| STR-1 | 41-42.5 | SS | 13.2 | – | 13 | 65 | 22 | NV | NP | NP | – | – | – | A-1-b (0) | SM |
| STR-2 | 11-12.5 | SS | 9.9 | – | 48 | 42 | 10 | NV | NP | NP | 0.008 | 7.2 | – | A-1-a (0) | GW-GM |
| STR-2 | 36-37.5 | SS | 10.4 | – | 47 | 40 | 13 | NV | NP | NP | – | – | – | A-1-a (0) | GM |

Note: Large boulders may be anticipated at any depth

Print Date: 1/26/2009
File Name: ENG_GEO.dgn
Horiz. Scale: 1:40 Vert. Scale: As Noted
Unit Information Unit Leader Initials

Yeh and Associates, Inc.
Consulting Engineers & Scientists

R-X

| Sheet Revisions | | |
|---|---|---|
| Date: | Comments | Init. |
| | | |
| | | |
| | | |
| | | |

Colorado Department of Transportation
DOT
DEPARTMENT OF TRANSPORTATION
Mountain Residency P.O. Box 399
Dumont, CO 80436
Phone: 303-512-5750 FAX: 303-512-5775
Region 1 DCW

As Constructed
No Revisions:
Revised:
Void:

ENGINEERING GEOLOGY

Designer: TMS
Detailer: MDN
Sheet Subset: Bridge
Structure Numbers: F-12-BW
Subset Sheets: B05 of 25

Project No./Code
STA 0091-035
16439
Sheet Number 68

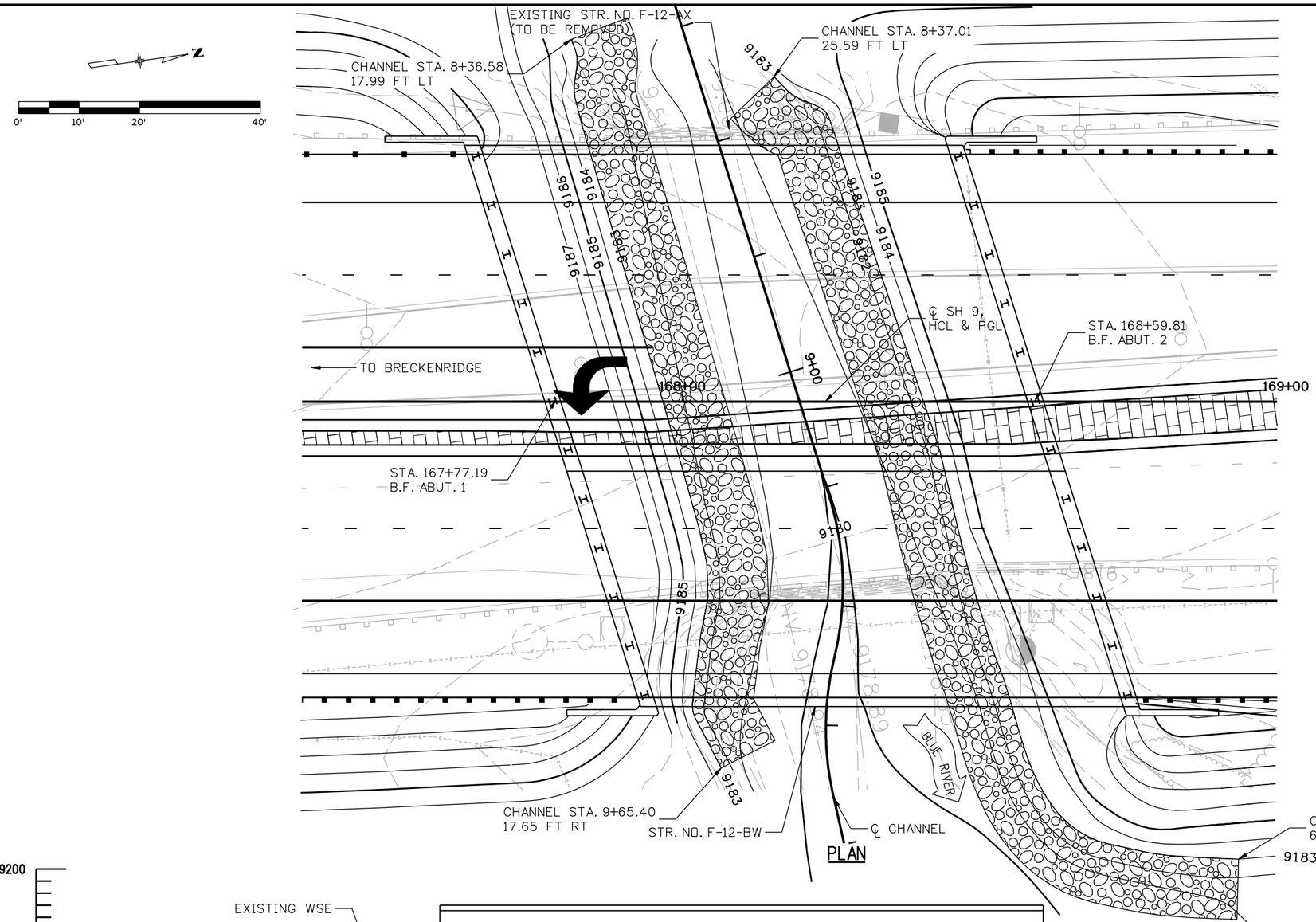


## HYDRAULIC DATA

DA = 53 SQ. MI.
$Q_{100}$ = 900 cfs
$HW_{100}$= 9184.3 ft
$Q_{500}$ = 1400 cfs
$HW_{500}$= 9185.2 ft
MIN. FREEBOARD = 2.30 ft

RIPRAP CONSTRUCTION: .
THE RIPRAP (18 INCH) SHALL BE PLACED FOLLOWING THE 9183 CONTOUR. IT SHALL BE 10 FEET WIDE AS SHOWN IN THE PLAN VIEW AND EXTEND TO THE LABELED STATIONS. IT SHALL BE 32 INCHES THICK.

| SCOUR ELEV. | 100 YR | 500 YR |
|---|---|---|
| 8+60 | 9177.5 | 9177.2 |
| 9+53 | 9175.5 | 9175.2 |

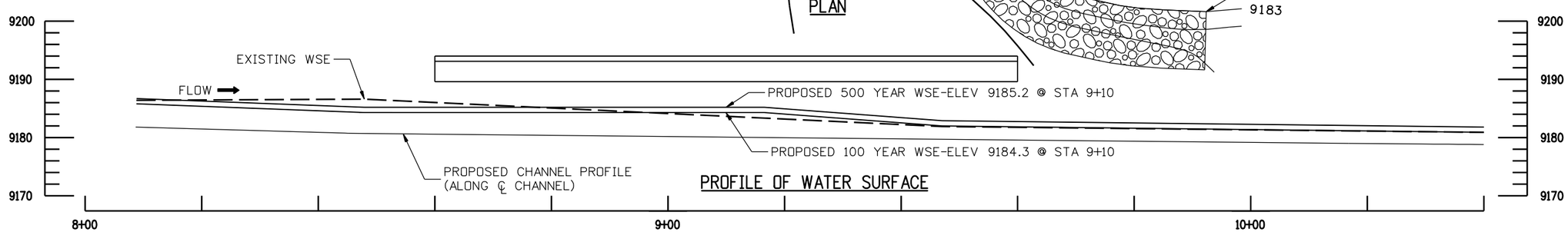


PROFILE OF WATER SURFACE

| | | | |
|---|---|---|---|
| Print Date: 8/19/2008 | Sheet Revisions | | |
| File Name: 16439BridgeHydraulicInfo01.dgn | Date: | Comments | Init. |
| Horiz. Scale: 1:20 Vert. Scale: As Noted | R-X | | |
| Staff Bridge Branch - Unit 0221 Unit Leader STW | | | |

PBSJ 4601 DTC Boulevard, Suite 700 Denver, CO 80237 Phone: (303) 221-7275 Fax: (303) 221-7276

Colorado Department of Transportation
DOT
Mountain Residency P.O. Box 399
Dumont, CO 80436
Phone: 303-512-5750 FAX: 303-512-5775
Region 1 DCW

As Constructed
No Revisions:
Revised:
Void:

BRIDGE HYDRAULIC INFORMATION
BLUE RIVER

| | | | |
|---|---|---|---|
| Designer: | MJC | Structure Numbers | F-12-BW |
| Detailer: | SLZ | | |
| Sheet Subset: | Bridge | Subset Sheets: | B06 of 25 |

Project No./Code
STA 0091-035
16439
Sheet Number 69

22204 2:07:03 PM s:\Tranproj\246220-05\14927\Consultants\Plot_Sets\FOR\16439BridgeHydraulicInfo01.dgn

## HYDRAULIC DATA

$Q_{100}$ = 900 CFS

$Q_{500}$ = 1400 CFS

$DHW_{100}$ = 2.7 FT

$HW_{500}$ = 3.3 FT

OHW = 1.2 FT

$VEL_{100}$ = 13.1 FPS

$VEL_{500}$ = 14.7 FPS

100 YR SCOUR = 3.0 FEET

500 YR SCOUR = 3.5 FEET

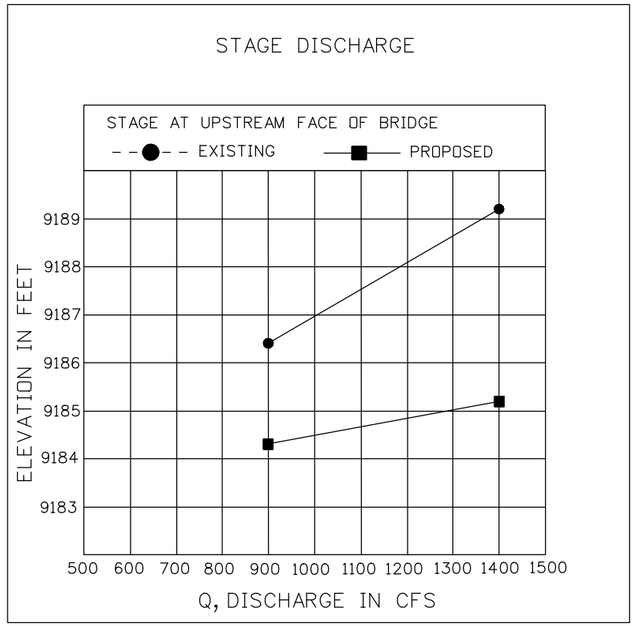


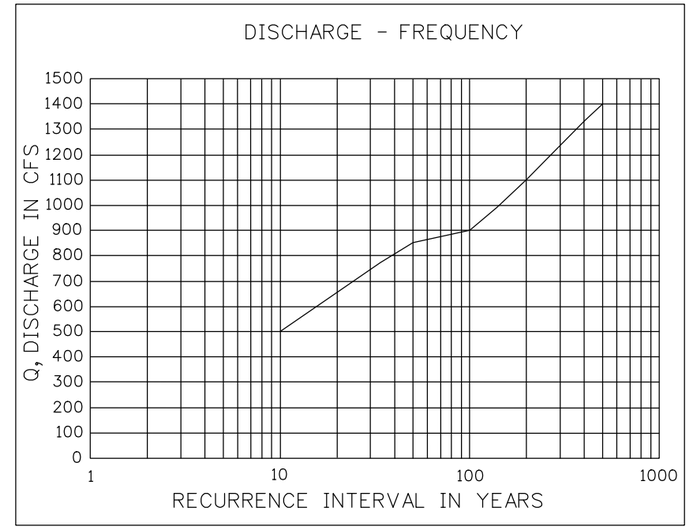


DRAINAGE AREA = 53 SQ MI

### CHANNEL DESCRIPTION

BOTTOM MATERIAL: COHESIVE☐ NON COHESIVE■

BOTTOM MATERIAL SIZE: CLAY☐ SILT☐ SAND■ GRAVEL■ COBBLES■ OTHER☐

STREAM FORM: STRAIGHT☐ MEANDERING■ BRAIDED☐

MANNINGS "n" FOR DESIGN: CHANNEL= 0.035 OVERBANK= 0.05

DEBRIS: BRUSH■ TREES/LOGS☐ ICE☐ OTHER☐

MANNINGS "n" FOR DESIGN -
CHANNEL = 0.035, OVERBANK = 0.050

DEBRIS - BRUSH

### COMPARISON OF 100-YEAR HYDRAULICS

| | VELOCITY (fps) | FREEBOARD (ft) | MAX BACKWATER (ft) |
|---|---|---|---|
| EXISTING | 9.49 | N/A | N/A |
| PROPOSED | 13.05 | 2.30 | 1.20 ft |

NOTES:

ELEVATION OF THALWAG (CROSS SECTION 3000)
EXISTING = 9180.20
PROPOSED = 9180.53

SEE BRIDGE HYDRAULIC INFORMATION SHEET
PLAN AND PROFILE FOR LIMITS OF RIPRAP

## TYPICAL RIPRAP DETAIL

Looking Up Stream-Not to Scale

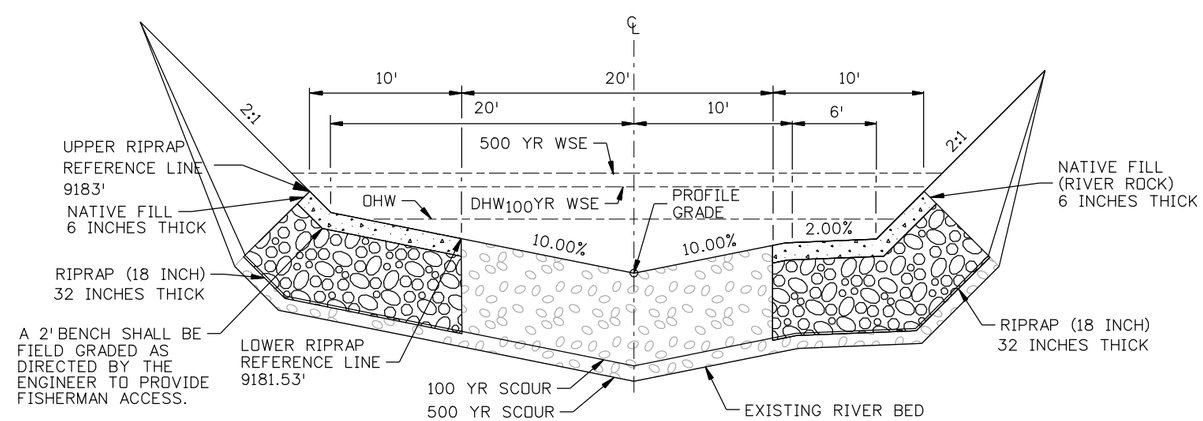


| | | | | |
|---|---|---|---|---|
| Print Date: 08/04/08 | | Sheet Revisions | | |
| File Name: 16439BridgeHydraulicInfo02.dgn | | Date: | Comments | Init. |
| Horiz. Scale: As Noted Vert. Scale: As Noted | R-X | | | |
| Staff Bridge Branch - Unit 0221 Unit Leader STW | | | | |
| PBSJ 4601 DTC Boulevard, Suite 700 Denver, CO 80237 Phone: (303) 221-7275 Fax: (303) 221-7276 | | | | |

Colorado Department of Transportation
CDOT DEPARTMENT OF TRANSPORTATION
Mountain Residency P.O. Box 399
Dumont, CO 80436
Phone: 303-512-5750 FAX: 303-512-5775
Region 1 DCW

As Constructed
No Revisions:
Revised:
Void:

BRIDGE HYDRAULIC INFORMATION
BLUE RIVER

| | | | |
|---|---|---|---|
| Designer: | AJF | Structure Numbers | F-12-BW |
| Detailer: | AJF | | |
| Sheet Subset: | Bridge | Subset Sheets: | B07 of 25 |

Project No./Code
STA 0091-035
16439
Sheet Number 70

22204 2:20:19 PM s:\Tranproj\246220-05\14927\Consultants\Plot_Sets\FDR\16439BridgeHydraulicInfo02.dgn

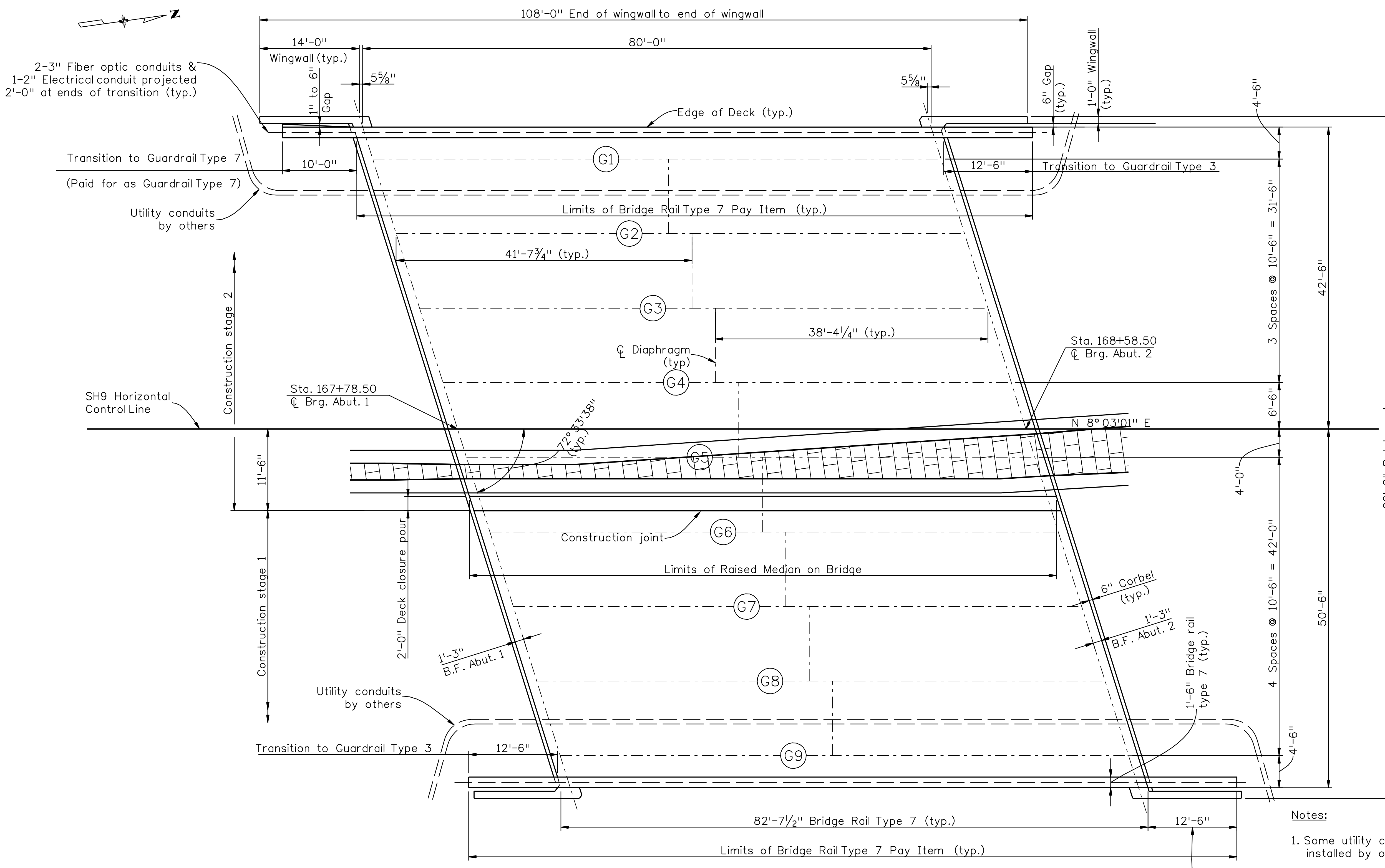


## CONSTRUCTION LAYOUT

Notes:

1. Some utility conduits and hangers will be installed by others.
2. The contractor shall coordinate with utility companies for those installations.
3. See raised median details on sheet B14.

| | | |
|---|---|---|
| Revision Dates (Preliminary Stage Only) | MM/YY | |

| | | INITIAL | DATE |
|---|---|---|---|
| Quantities | Quantities By | JSV | 11/07 |
| | Checked By | PPC | 11/07 |
| Detail | Detailed By | JSV | 10/07 |
| | Checked By | PPC | 11/07 |
| Design | Designed By | PPC | 09/07 |
| | Checked By | MCY | 09/07 |

Print Date: 9/19/2008
File Name: 08 Construction Layout.dgn
Horiz. Scale: 1:1 Vert. Scale: As Noted
Staff Bridge Branch - Unit 0221 STW

| Sheet Revisions | | |
|---|---|---|
| Date: | Comments | Init. |
| | | |
| | | |
| | | |
| | | |

Colorado Department of Transportation
4201 East Arkansas Avenue
Room 107
Denver, CO 80222
Phone: 303-512-4072 FAX: 303-757-9197
Staff Bridge Branch STW

As Constructed
No Revisions:
Revised:
Void:

CONSTRUCTION LAYOUT

| | | | |
|---|---|---|---|
| Designer: P.Chomsrimake | Structure Numbers | F-12-BW | |
| Detailer: C. Lenway | | | |
| Sheet Subset: Bridge | Subset Sheets: B08 of 25 | | |

Project No./Code
STA 0091-035
16439
Sheet Number 71

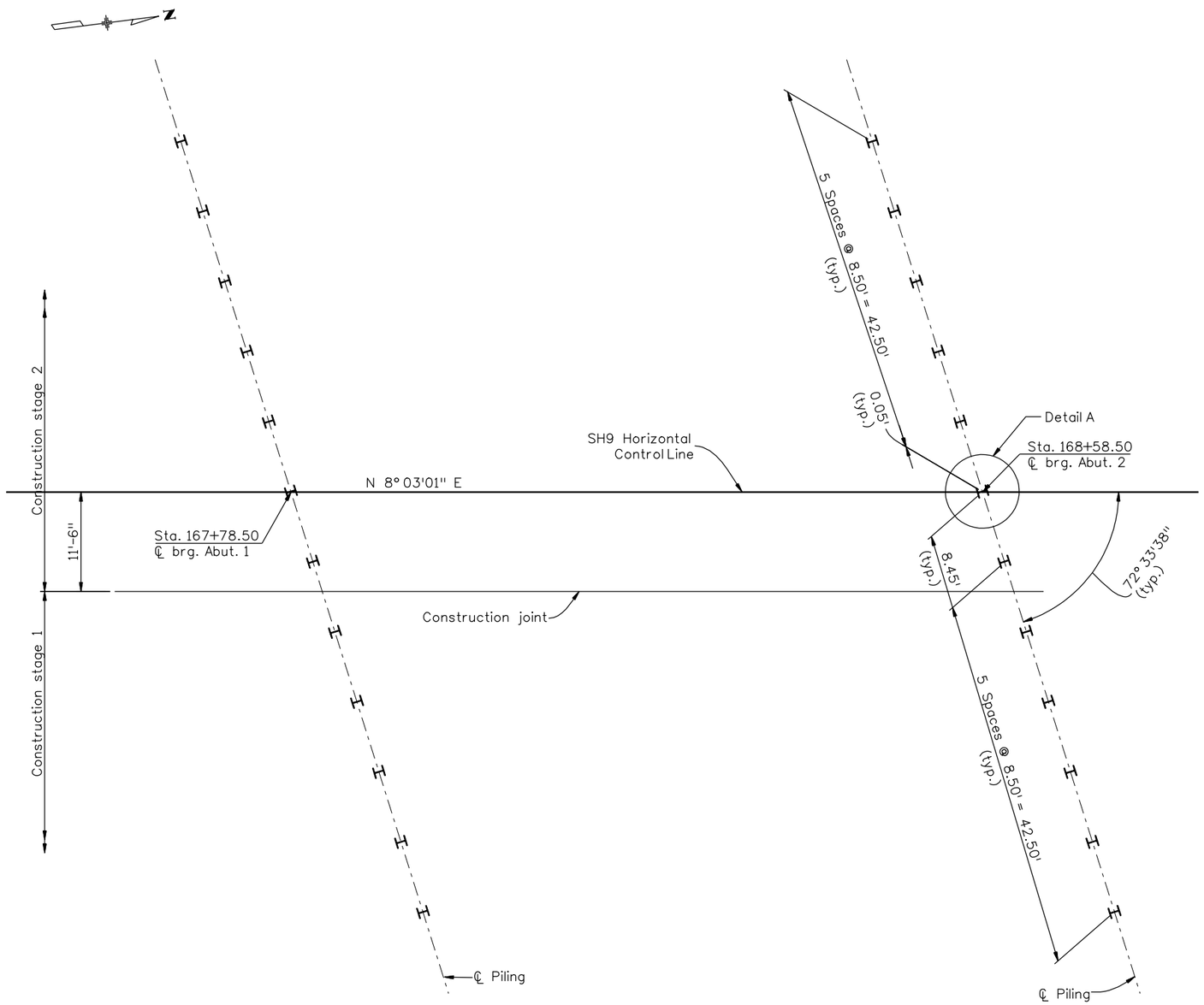


PILING LAYOUT

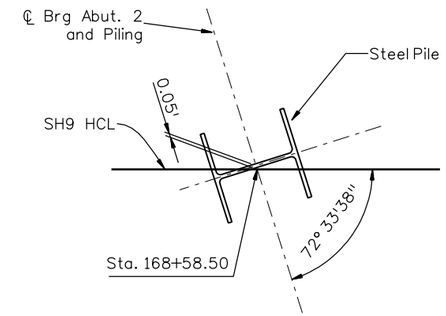


DETAIL A

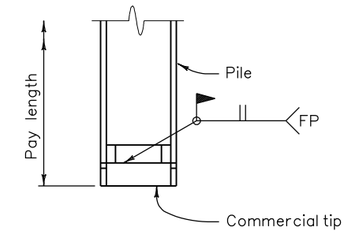


REINFORCING TIP DETAIL

Note: Use commercial tip APF Hard Bite 77600 or approved alternate.

Notes:

1. H-Pile capacities are based upon a resistance factor of 0.45 and ultimate bearing capacity of 30 ksi.

2. All steel piles shall be (AASHTO M270, Grade 50) HP 14 X 89 with a protective cast-steel pile point driven by an open-ended diesel hammer with a manufacturer's rated energy of 70 to 75 kft. The protective pile point will be paid for under item 502-Pile Tip (Ea).

3. Orient the H-Pile web to be perpendicular to the centerline of bearing as shown.

4. On site observation of pile driving to confirm the bearing strata and determine the exact elevation at which the competent bedrock or dense gravel exists, and to check for pile crimping, buckling and alignment by a representative of the geotechnical engineer will be provided.

5. All piles shall be driven to virtual refusal into the dense gravels or bedrock.

6. A minimum of one Pile Dynamic load test will be required per abutment using CDOT's Pile Driving Analyzer (PDA). Final tip elevations and quantities will be determined by using the refusal criteria of the PDA measurements. The contractor shall submit pile tip and hammer parameters to CDOT Geotechnical Branch (303-512-4043) a minimum of ten calendar days prior to beginning of any pile driving work.

PILE DATA

| Location | Max. Service Load (kips) | Max. load (Factored) (kips) | Estimated Tip Elevation | Pile size |
|---|---|---|---|---|
| Abutment 1 | 226.9 | 312.5 | 9144.0 | HP 14X89 |
| | | | | |
| Abutment 2 | 226.9 | 312.5 | 9145.0 | HP 14X89 |

| Design | | | |
|---|---|---|---|
| | INITIAL | DATE | |
| Designed By | PPC | 09/07 | |
| Checked By | MCY | 09/07 | |

| Detail | | | |
|---|---|---|---|
| | INITIAL | DATE | |
| Detailed By | JSV | 10/07 | |
| Checked By | PPC | 11/07 | |

| Quantities | | | |
|---|---|---|---|
| | INITIAL | DATE | |
| Quantities By | JSV | 11/07 | |
| Checked By | PPC | 11/07 | |

| Revision Dates | (Preliminary Stage Only) |
|---|---|
| MM/YY | |

chamsrimakep 3:25:33 PM P:\0221\Active Projects\R1-West\16439 SH9 Agape Church to Tiger Road (F-12-BW)\Drawings\09 Piling Layout.dgn

Print Date: 8/26/2008
File Name: 09 Piling Layout.dgn
Horiz. Scale: 1:1 Vert. Scale: As Noted
Staff Bridge Branch - Unit 0221 Unit Leader STW

R-X

| Sheet Revisions | | |
|---|---|---|
| Date: | Comments | Init. |
| | | |
| | | |
| | | |
| | | |


Colorado Department of Transportation
4201 East Arkansas Avenue
Room 107
Denver, CO 80222
Phone: 303-512-4072 FAX: 303-757-9197
Staff Bridge Branch STW


As Constructed
No Revisions:
Revised:
Void:

PILING LAYOUT

Designer: P. Chamsrimake
Detailer: C. Lenway
Structure Numbers F-12-BW
Sheet Subset: Bridge
Subset Sheets: B09 of 25

Project No./Code
STA 0091-035
16439
Sheet Number 72

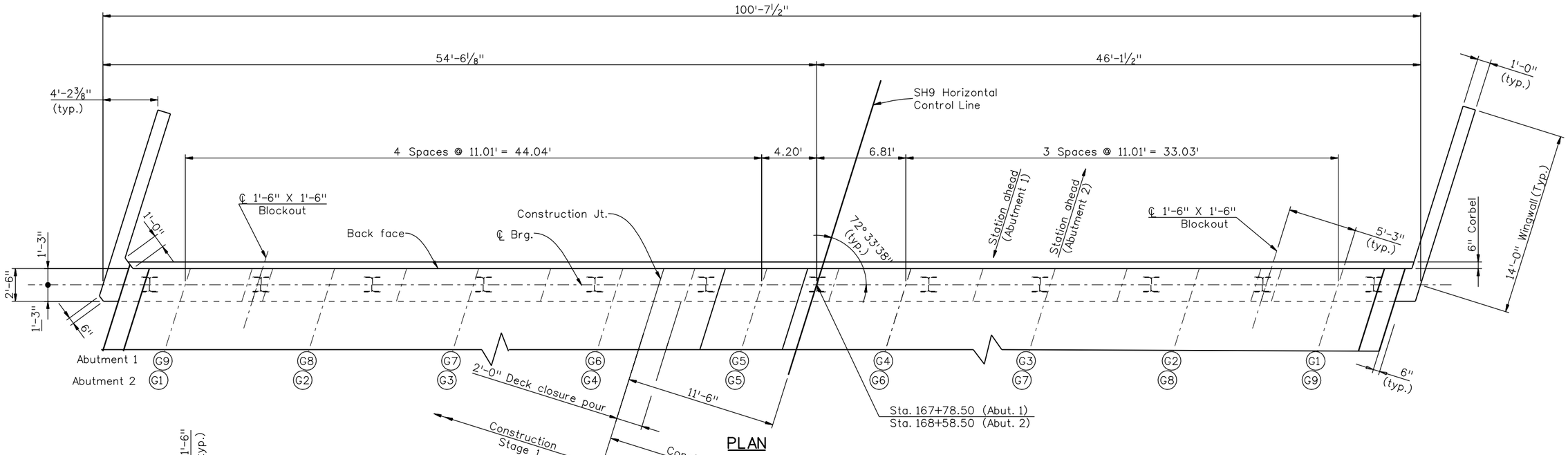


PLAN

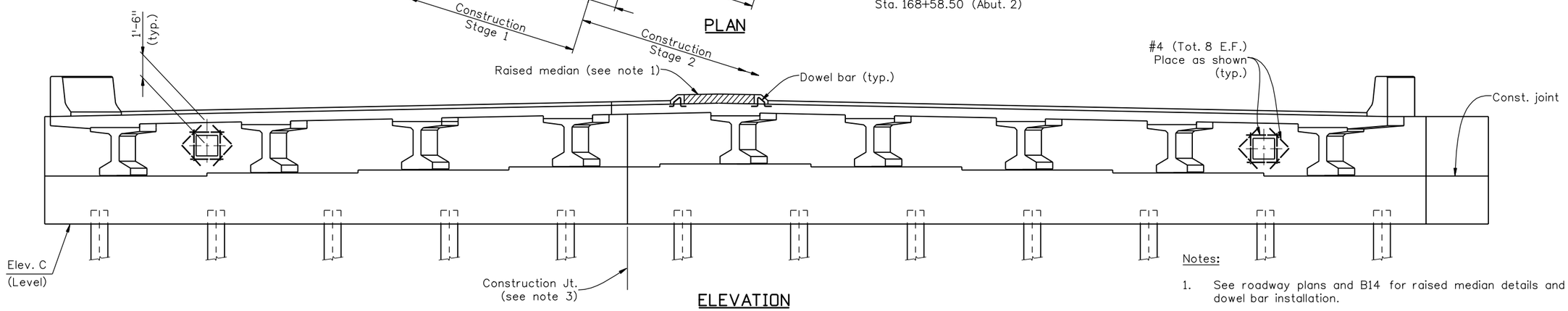


ELEVATION

## Girder Seat Elevation Table

| Location | Elevation | | | | | | | | | |
|---|---|---|---|---|---|---|---|---|---|---|
| | G1 | G2 | G3 | G4 | G5 | G6 | G7 | G8 | G9 | C |
| Abutment 1 | 9189.89 | 9190.04 | 9190.20 | 9190.35 | 9190.34 | 9190.07 | 9189.80 | 9189.53 | 9189.25 | 9185.0 |
| Abutment 2 | 9188.23 | 9188.36 | 9188.49 | 9188.61 | 9188.58 | 9188.28 | 9187.98 | 9187.68 | 9187.38 | 9183.1 |

Notes:

1. See roadway plans and B14 for raised median details and dowel bar installation.
2. For wingwall details and elevations, see Dwg. No. B12.
3. See Dwg. No. B11 for reinforcing details at construction joint and abutment walls.
4. The contractor shall verify all girder seat elevations prior to girder erection and concrete pour.
5. Slab and portion of abutment above bearing seat to be poured monlithically.
6. For bearing details, see Dwg. No. B11.

| Design | | | Detail | | | Quantities | | |
|---|---|---|---|---|---|---|---|---|
| | INITIAL | DATE | | INITIAL | DATE | | INITIAL | DATE |
| Designed By | PPC | 09/07 | Detailed By | JSV | 10/07 | Quantities By | JSV | 11/07 |
| Checked By | MCY | 09/07 | Checked By | PPC | 11/07 | Checked By | PPC | 11/07 |

| Revision Dates | |
|---|---|
| (Preliminary Stage Only) | |
| MM/YY | |

Print Date: 8/25/2008
File Name: 10 Abut. 1 and 2 Details.dgn
Horiz. Scale: 1:1 Vert. Scale: As Noted
Staff Bridge Branch Unit - 0221 Unit Leader STW

R-X

| Sheet Revisions | | |
|---|---|---|
| Date: | Comments | Init. |
| | | |
| | | |
| | | |
| | | |


Colorado Department of Transportation
DOT DEPARTMENT OF TRANSPORTATION
4201 East Arkansas Avenue
Room 107
Denver, CO 80222
Phone: 303-512-4072 FAX: 303-757-9197
Staff Bridge Branch STW


As Constructed
No Revisions:
Revised:
Void:

ABUTMENT 1 AND 2

Designer: P.Chomsrimake
Detailer: C. Lenway
Sheet Subset: Bridge
Structure Numbers F-12-BW
Subset Sheets: B10 of 25

Project No./Code
STA 0091-035
16439
Sheet Number 73

chomsrimakep 3:33:25 PM P:\0221\Active Projects\R1-West\16439 SH9 Agape Church to Tiger Road (F-12-BW)\Drawings\10 Abut. 1 and 2 Details.dgn

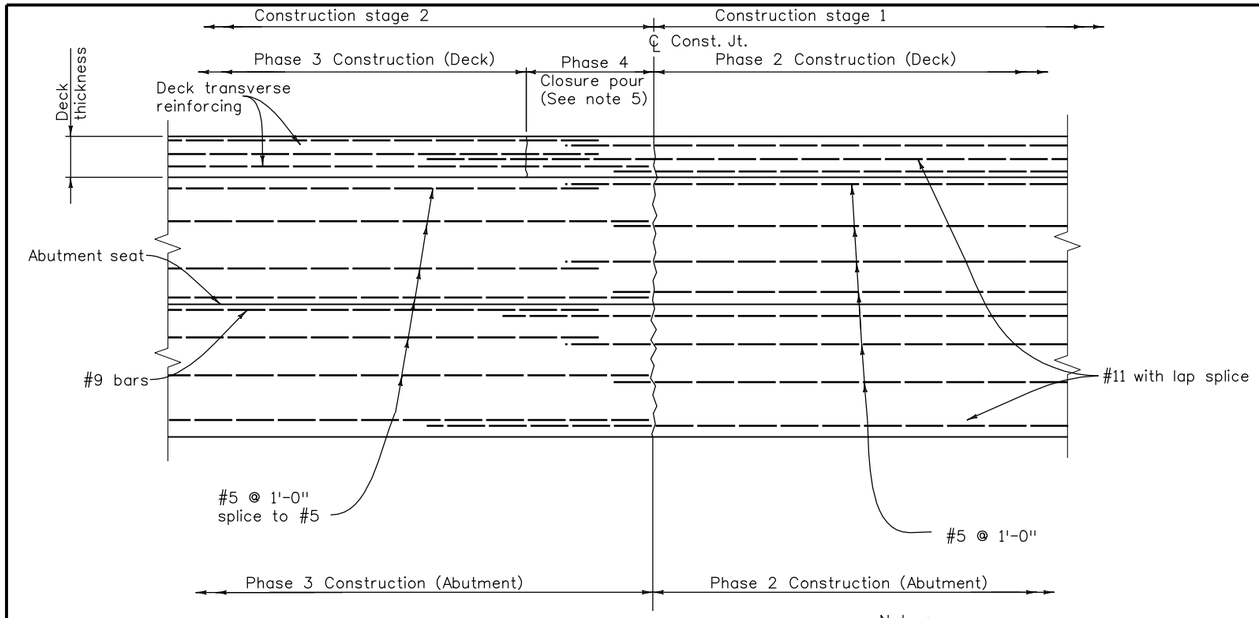


## PHASE CONSTRUCTION DETAIL- ABUTMENT ELEVATION

(See sheet B04 for phasing details)

Notes:

1. All transverse bar splices in deck and Abutment walls shall be staggered at construction line.
2. Mechanical splice is preferred.
3. All abutment and wingwall concrete shall be Concrete Class D (Bridge).
4. Extend strands from the bottom of precast girder sections into abutment.
5. Deck and abutment shall be monolithic concrete, except closure pour.

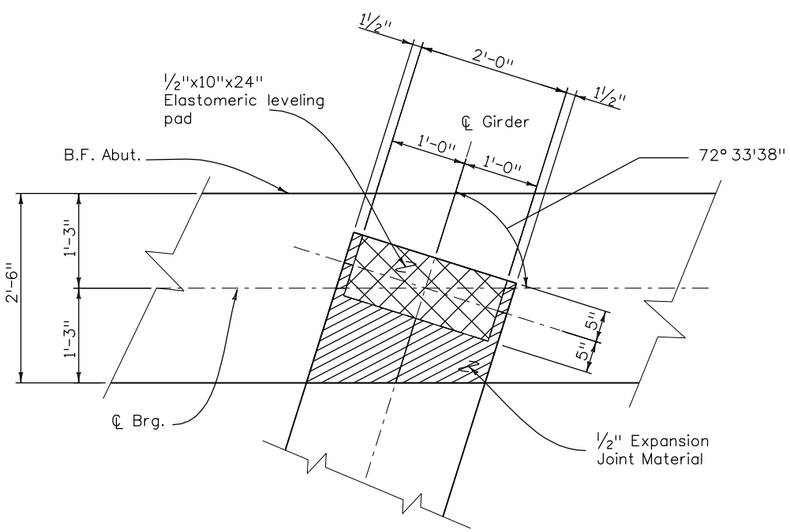


## BEARING DETAIL

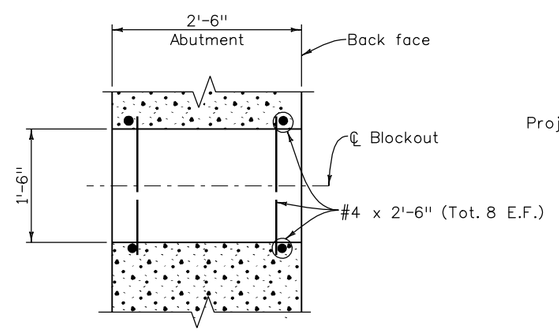


## UTILITY BLOCKOUT DETAIL

(See Dwg. No. B10 for opening dimensions)

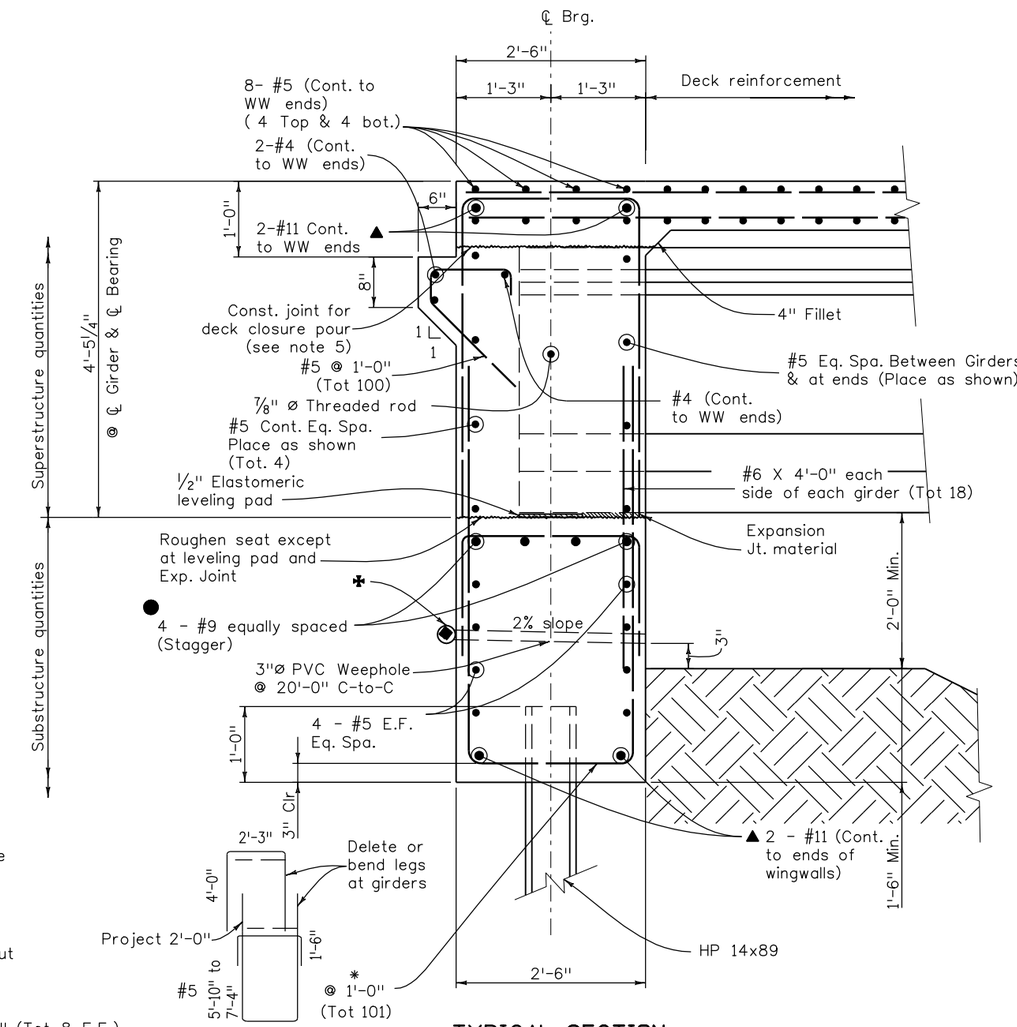


## TYPICAL SECTION

* Place legs parallel to girders

▲ #11 x 49'-7" Spliced with #11 x 58'-0"
#11 x 48'-11" Spliced with #11 x 56'-0" (Stagger splice)

✠ One cubic foot of Class B filter material in Geotextile filter fabric, securely tied.

● #9 x 46'-11" Spliced w/ #9 x 58'-6"
#9 x 48'-11" Spliced w/ #9 x 56'-0" (Stagger splice)

| Design | INITIAL | DATE |
|---|---|---|
| Designed By | PPC | 09/07 |
| Checked By | MCY | 09/07 |

| Detail | INITIAL | DATE |
|---|---|---|
| Detailed By | HN | 10/07 |
| Checked By | PPC | 11/07 |

| Quantities | INITIAL | DATE |
|---|---|---|
| Quantities By | JSV | 11/07 |
| Checked By | PPC | 11/07 |

| Revision Dates | (Preliminary Stage Only) |
|---|---|
| MM/YY | |

chomsrimakep 1:18:58 PM P:\0221\Active Projects\R1-West\16439 SH9 Agape Church to Tiger Road (F-12-BW)\Drawings\11 Abutment Details.dgn

| | |
|---|---|
| Print Date: 9/19/2008 | |
| File Name: 11 Abutment Details.dgn | |
| Horiz. Scale: 1:1.00001 | Vert. Scale: As Noted |
| Staff Bridge Branch - Unit 0221 | Unit Leader STW |

R-X

| Sheet Revisions | | |
|---|---|---|
| Date: | Comments | Init. |
| | | |
| | | |
| | | |
| | | |


Colorado Department of Transportation
4201 East Arkansas Avenue
Room 107
Denver, CO 80222
Phone: 303-512-4072 FAX: 303-757-9197
Staff Bridge Branch STW


As Constructed
No Revisions:
Revised:
Void:

ABUTMENT DETAILS

| | | | |
|---|---|---|---|
| Designer: P.Chomsrimake | | Structure Numbers | F-12-BW |
| Detailer: C. Lenway | | | |
| Sheet Subset: Bridge | | Subset Sheets: B11 of 25 | |

Project No./Code
STA 0091-035
16439
Sheet Number 74

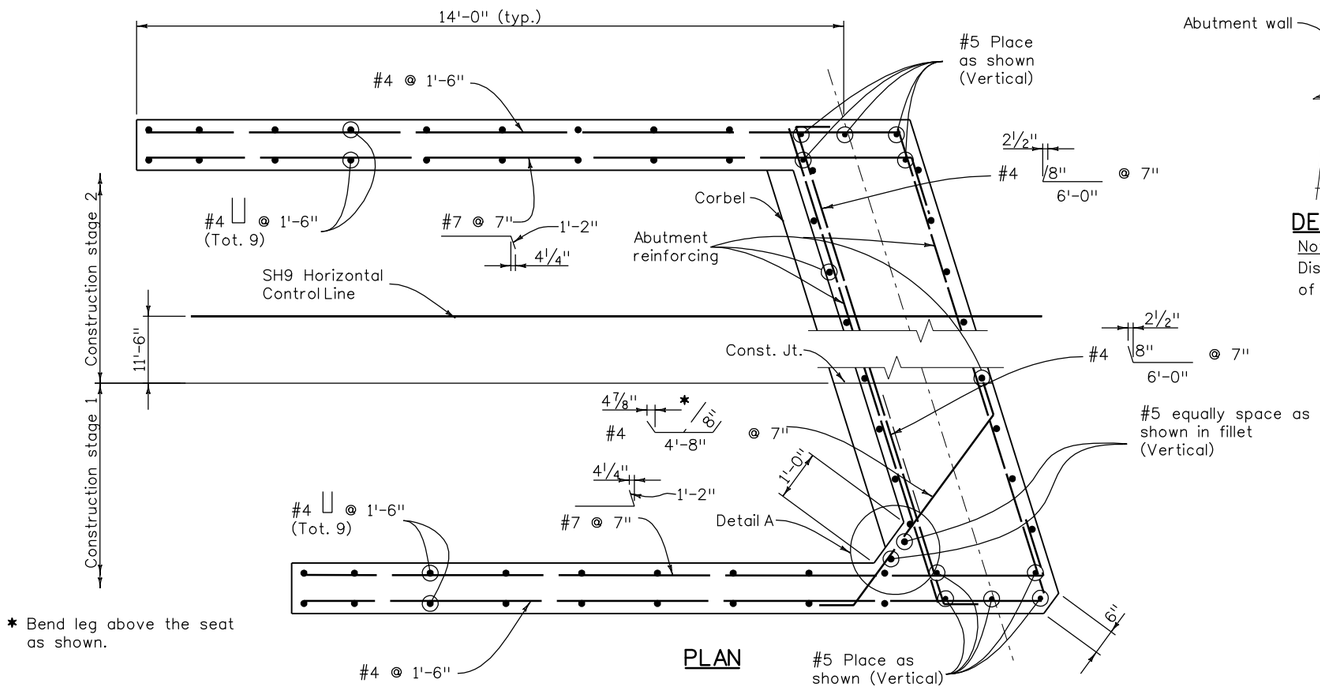


* Bend leg above the seat as shown.

PLAN

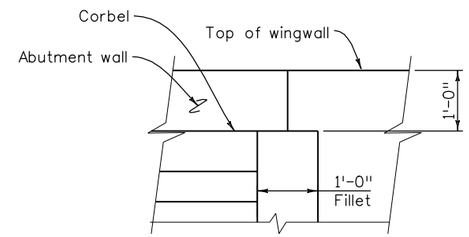


DETAIL A - ELEVATION VIEW

Note:
Discontinue fillet 1'-0" below the top of wingwall as shown.

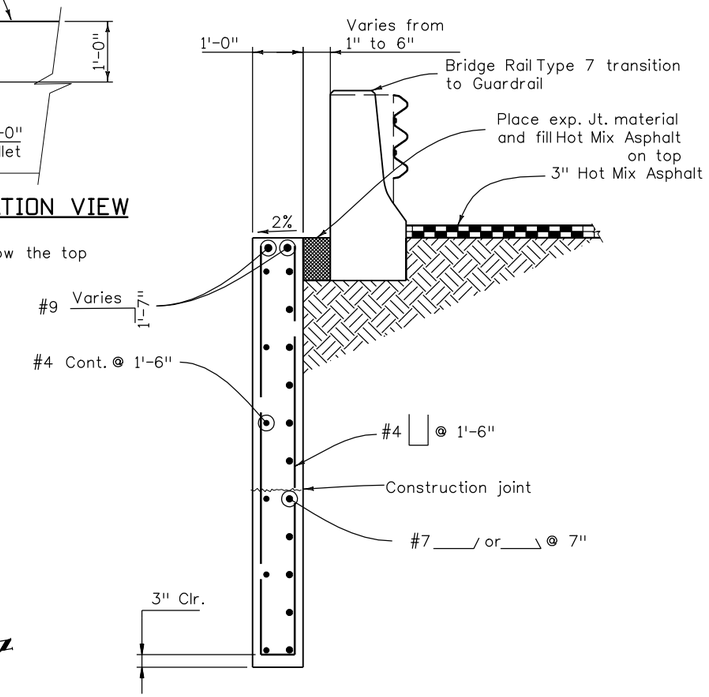


TYPICAL SECTION THROUGH WINGWALL

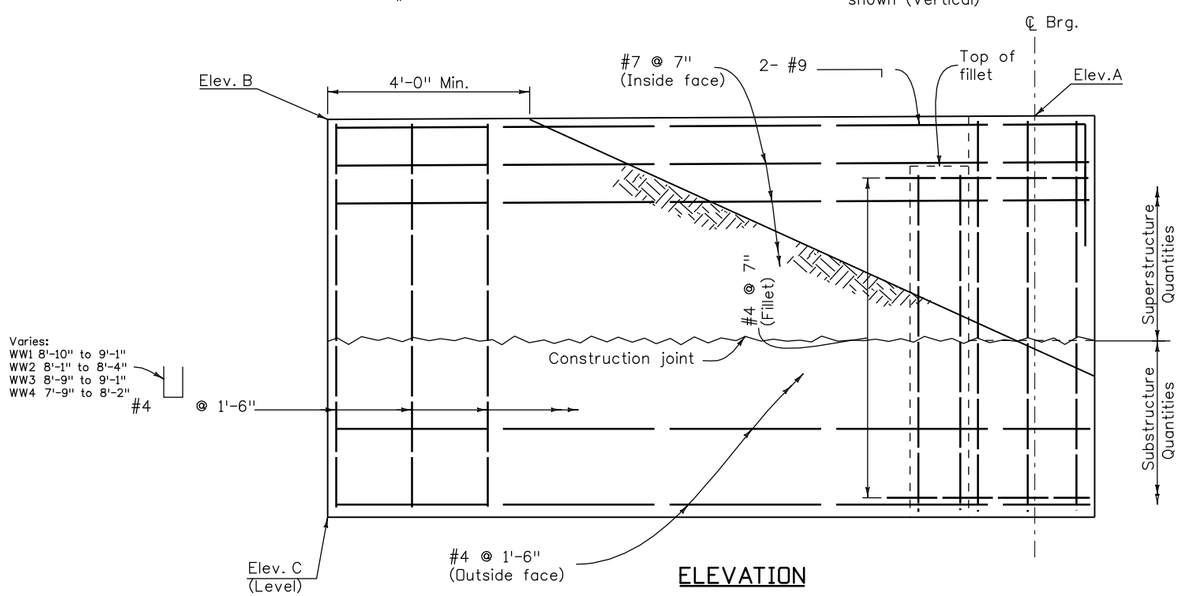


ELEVATION

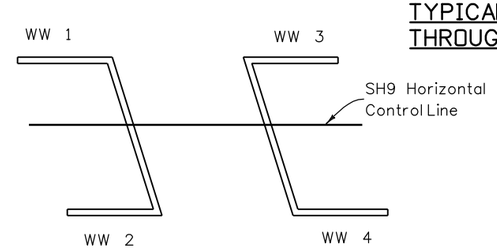


WINGWALL SCHEMATIC

Notes:

1. Elevations shown are outside face of wingwall
2. When conflict of rebars occur in wingwalls, the contractor may adjust rebars as per the Enginner's approval

WINGWALL INFORMATION

| Location | | Elevation (ft.) | | |
|---|---|---|---|---|
| | | A | B | C |
| Abutment 1 | WW1 | 9194.24 | 9194.46 | 9185.00 |
| | WW2 | 9193.53 | 9193.79 | 9185.00 |
| Abutment 2 | WW3 | 9192.60 | 9192.24 | 9183.10 |
| | WW4 | 9191.65 | 9191.25 | 9183.10 |

| Design | | | |
|---|---|---|---|
| | INITIAL | DATE | |
| Designed By | PPC | 11/07 | |
| Checked By | MCY | 11/07 | |

| Detail | | | |
|---|---|---|---|
| | INITIAL | DATE | |
| Detailed By | HN | 11/07 | |
| Checked By | PPC | 11/07 | |

| Quantities | | | |
|---|---|---|---|
| | INITIAL | DATE | |
| Quantities By | JSV | 11/07 | |
| Checked By | PPC | 11/07 | |

| Revision Dates | (Preliminary Stage Only) |
|---|---|
| MM/YY | |

| | | | | |
|---|---|---|---|---|
| Print Date: 9/19/2008 | R-X | Sheet Revisions | | |
| File Name: 12 Wingwall Details.dgn | | Date: | Comments | Init. |
| Horiz. Scale: 1:1 Vert. Scale: As Noted | | | | |
| Staff Bridge Branch - Unit 0221 STW | | | | |

Colorado Department of Transportation
4201 East Arkansas Avenue
Room 107
Denver, CO 80222
Phone: 303-512-4072 FAX: 303-757-9197
Staff Bridge Branch STW

As Constructed
No Revisions:
Revised:
Void:

WINGWALL DETAILS

Designer: P.Chomsrimake
Detailer: C. Lenway
Sheet Subset: Bridge
Structure Numbers: F-12-BW
Subset Sheets: B12 of 25

Project No./Code
STA 0091-035
16439
Sheet Number 75

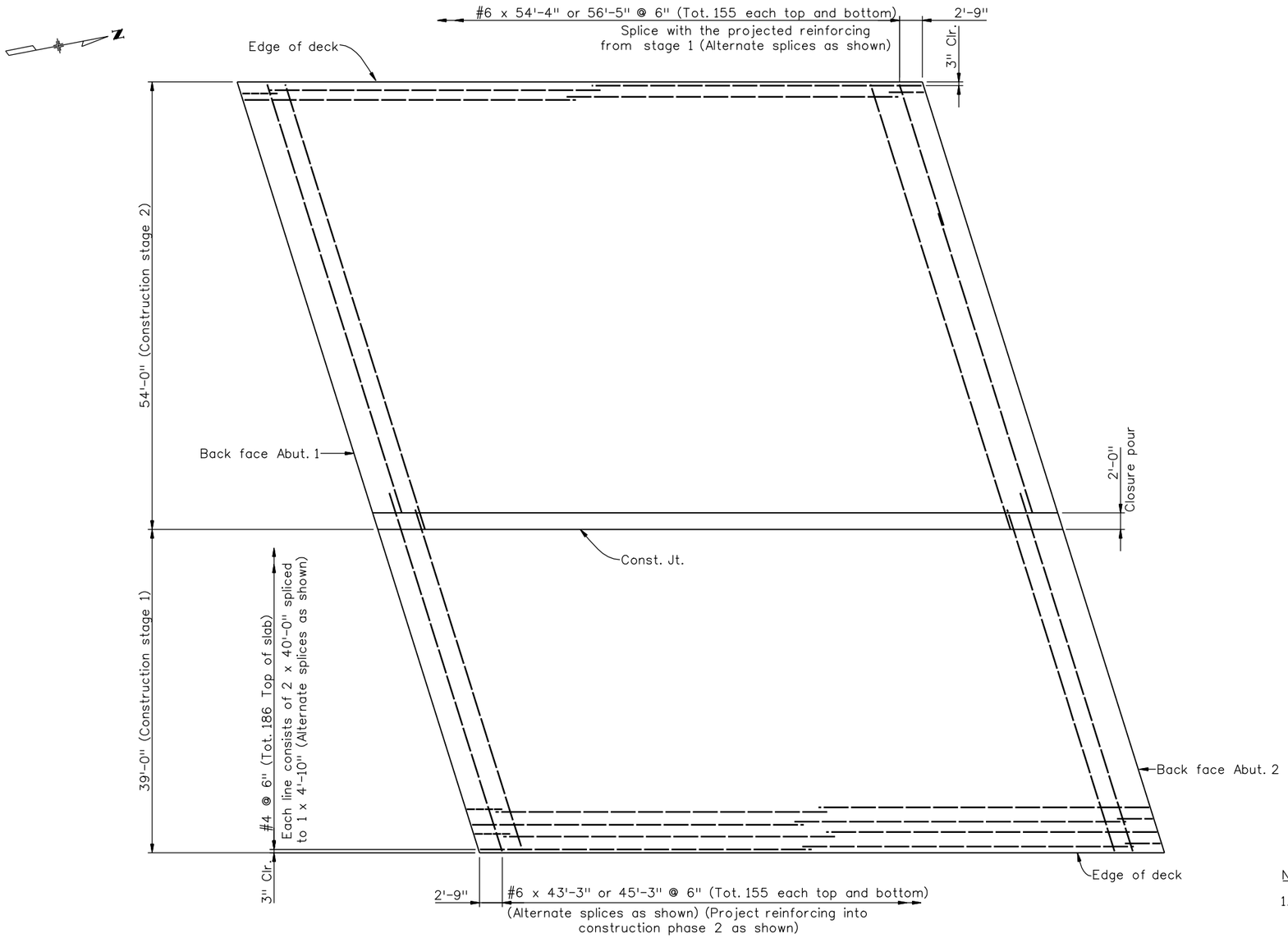


## DECK REINFORCING PLAN

Notes:

1. Bottom longitudinal reinforcing not shown, see Dwg. No. B19 for Typical Section and Bridge Rail reinforcing.
2. Median and Bridge Rail reinforcing not shown for clarity.
3. Mechanical splice is allowed.

| Design | | | Detail | | | Quantities | | |
|---|---|---|---|---|---|---|---|---|
| | INITIAL | DATE | | INITIAL | DATE | | INITIAL | DATE |
| Designed By | PPC | 09/07 | Detailed By | JSV | 10/07 | Quantities By | JSV | 11/07 |
| Checked By | MCY | 09/07 | Checked By | PPC | 11/07 | Checked By | PPC | 11/07 |

Revision Dates (Preliminary Stage Only)
MM/YY

chomsrimakep 3:38:40 PM P:\0221\Active Projects\R1-West\16439 SH9 Agape Church to Tiger Road (F-12-BW)\Drawings\13 Superstructure Details.dgn

| | | | |
|---|---|---|---|
| Print Date: 8/25/2008 | | | |
| File Name: 13 Superstructure Details.dgn | | | |
| Horiz. Scale: 1:1 | Vert. Scale: As Noted | | |
| Staff Bridge Branch - Unit 0221 | Unit Leader STW | | |

R-X

| Sheet Revisions | | |
|---|---|---|
| Date: | Comments | Init. |
| | | |
| | | |
| | | |
| | | |

Colorado Department of Transportation
4201 East Arkansas Avenue
Room 107
Denver, CO 80222
Phone: 303-512-4072 FAX: 303-757-9197
Staff Bridge Branch STW

As Constructed
No Revisions:
Revised:
Void:

SUPERSTRUCTURE DETAILS

| | | | |
|---|---|---|---|
| Designer: P. Chomsrimake | | Structure Numbers | F-12-BW |
| Detailer: C. Lenway | | | |
| Sheet Subset: Bridge | | Subset Sheets: B13 of 25 | |

Project No./Code
STA 0091-035
16439
Sheet Number 76

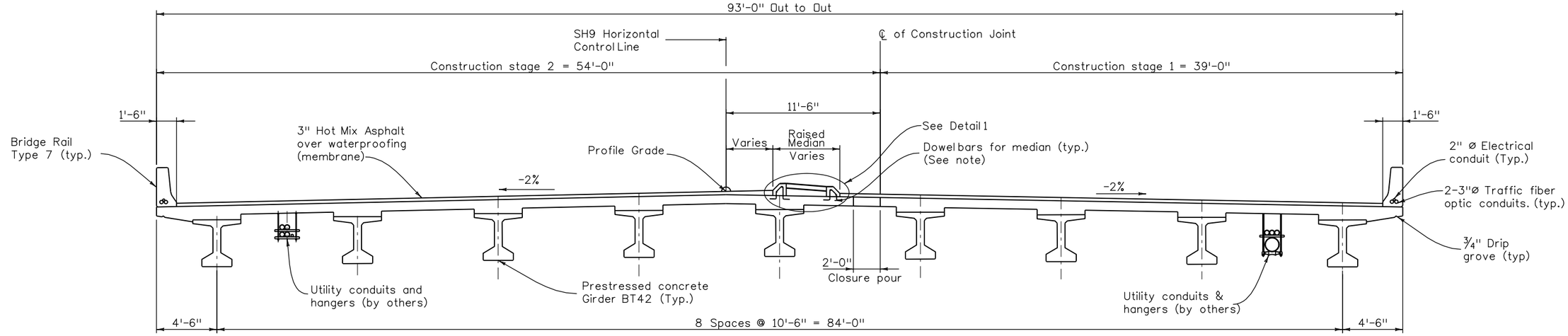


## TYPICAL SECTION

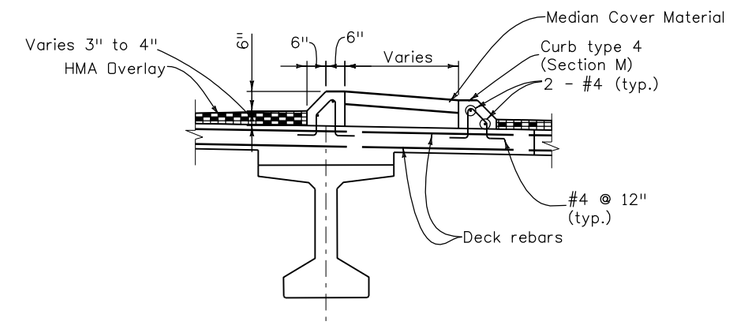


## DETAIL 1 - RAISED MEDIAN

Notes:

1. For additional deck details see deck reinforcing plan sheet B18.
2. Stagger all splices.
3. See roadway plans for transition stationing of raised median.
4. See standard M-609-1 curb type 4 (Section M) for details.
5. Rebars in curbs will not be paid separately, but shall be included in pay item 609, curb type 4 (section M).
6. Concrete Class B shall be used for the raised median.

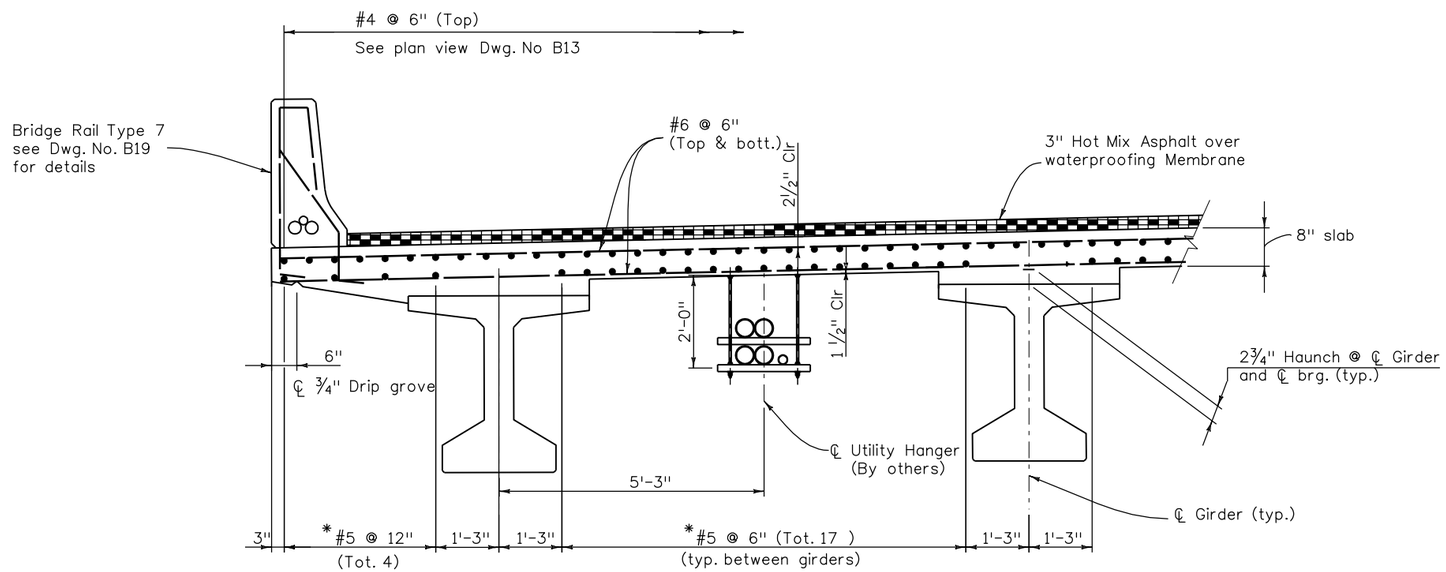


## PARTIAL REINFORCING DETAILS

* #5, 2 x 40'-0" Spliced w/ #5, 1 x 4'-8"

| Design | | | Detail | | | Quantities | | |
|---|---|---|---|---|---|---|---|---|
| | INITIAL | DATE | | INITIAL | DATE | | INITIAL | DATE |
| Designed By | PPC | 09/07 | Detailed By | HN | 10/07 | Quantities By | JSV | 11/07 |
| Checked By | MCY | 09/07 | Checked By | PPC | 11/07 | Checked By | PPC | 11/07 |

Revision Dates (Preliminary Stage Only): MM/YY

| | | | | | |
|---|---|---|---|---|---|
| Print Date: 9/19/2008 | | Sheet Revisions | | | |
| File Name: 14 Deck Reinforcing Details.dgn | | Date: | Comments | Init. | |
| Horiz. Scale: 1:1 Vert. Scale: As Noted | R-X | | | | |
| Staff Bridge Branch - unit 0221 STW | | | | | |

Colorado Department of Transportation
4201 East Arkansas Avenue
Room 107
Denver, CO 80222
Phone: 303-512-4072 FAX: 303-757-9197
Staff Bridge Branch STW

As Constructed
No Revisions:
Revised:
Void:

DECK REINFORCING DETAILS

Designer: P.Chomsrimake
Detailer: C. Lenway
Sheet Subset: Bridge
Structure Numbers: F-12-BW
Subset Sheets: B14 of 25

Project No./Code
STA 0091-035
16439
Sheet Number 77

P:\0221\Active Projects\R1-West\16439 SH9 Agape Church to Tiger Road (F-12-BW)\Drawings\14 Deck Reinforcing Details.dgn

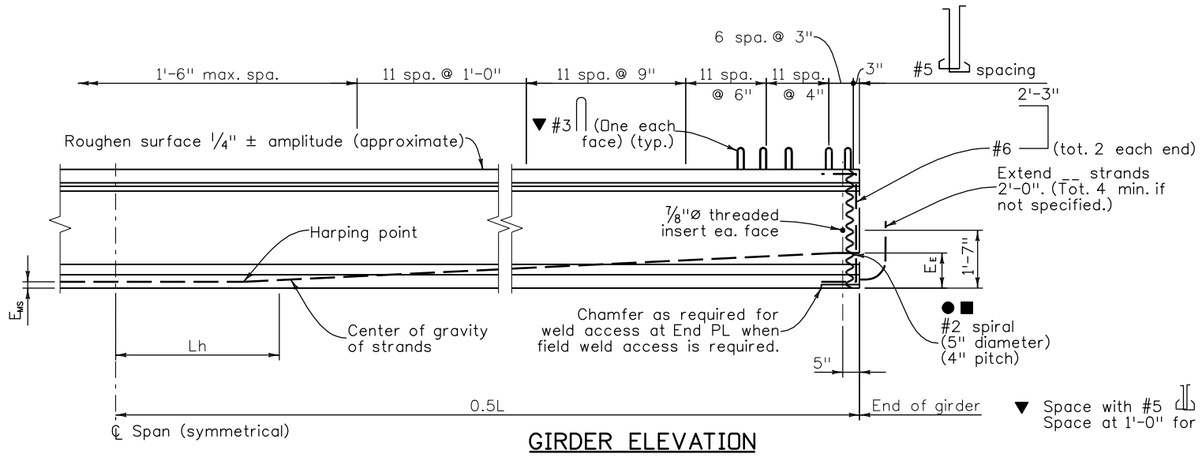


## GIRDER ELEVATION

▼ Space with #5 for stirrup spacings of 9" or more. Space at 1'-0" for stirrup spacings less than 9".

● D20 wires may be used in lieu of #4. 2 - D20 wires may be used in lieu of #6. D11 or W10.9 wires may be used in lieu of #3. W5 wires my be used in lieu of #2.

■ The Contractor may submit an alternate cross tie arrangement, at the end of the web, for approval by the Engineer.

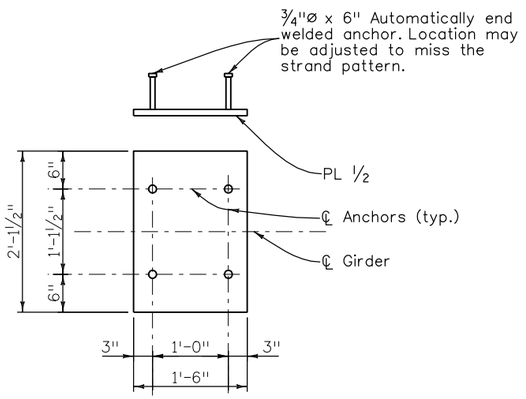


## END PLATE DETAIL

Galvanize after fabrication.

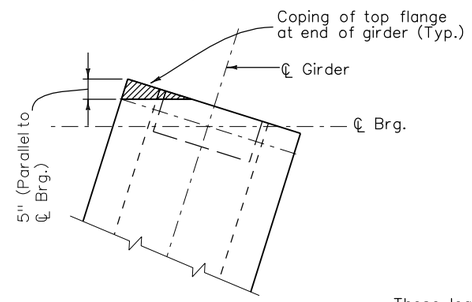


## TOP FLANGE DETAIL

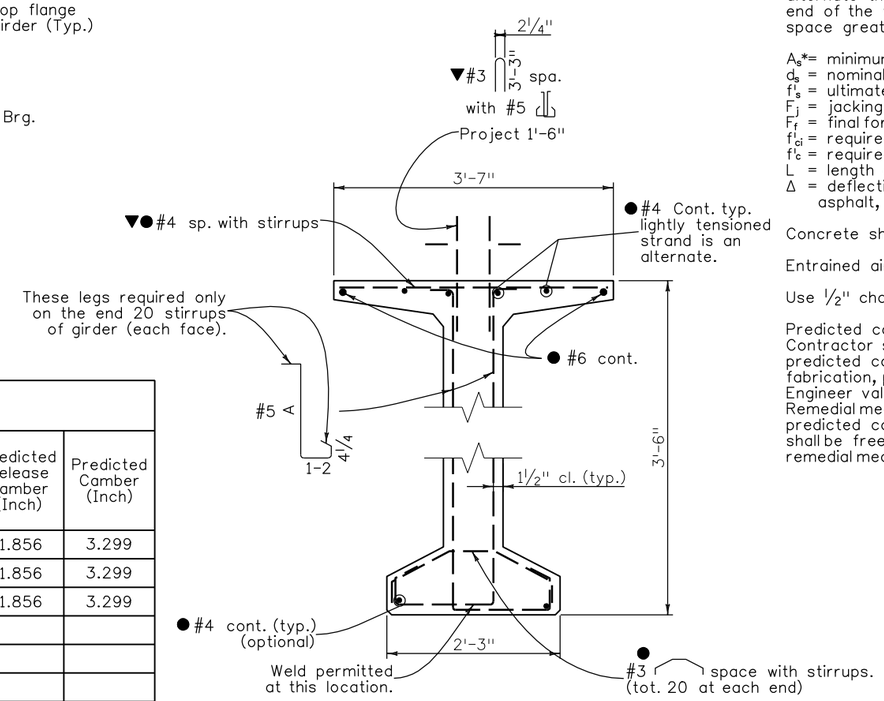


## TYPICAL GIRDER SECTION

A = girder depth - 3"

## GIRDER SCHEDULE

| Girder Type | Span No. | Girder No. | L (Feet) | Lh (Feet) | $A_s$* (Square Inch) | $E_{MS}$ (Inch) | $E_E$ (Inch) | $F_j$ (KIPS) | $F_f$ (KIPS) | Concrete Strength $f'_{ci}$ (PSI) | Concrete Strength $f'_c$ (PSI) | Δ (Inch) | Predicted Release Camber (Inch) | Predicted Camber (Inch) |
|---|---|---|---|---|---|---|---|---|---|---|---|---|---|---|
| BT42 | 1 | 1 | 80.83 | 8.087 | 6.076 | 3.72 | 12.57 | 1230.4 | 1061.60 | 6500 | 7500 | 1.403 | 1.856 | 3.299 |
| BT42 | 1 | 2-8 | 80.83 | 8.087 | 6.076 | 3.72 | 12.57 | 1230.4 | 1055.19 | 6500 | 7500 | 1.485 | 1.856 | 3.299 |
| BT42 | 1 | 9 | 80.83 | 8.087 | 6.076 | 3.72 | 12.57 | 1230.4 | 1061.60 | 6500 | 7500 | 1.403 | 1.856 | 3.299 |
| | | | | | | | | | | | | | | |
| | | | | | | | | | | | | | | |
| | | | | | | | | | | | | | | |
| | | | | | | | | | | | | | | |
| | | | | | | | | | | | | | | |

## NOTES:

All work necessary to fabricate and install the integral parts of the girder (including the intermediate diaphragms, 7/8"Ø threaded rods, and leveling pads), as shown on the plans, shall be included in the bid price for Item No. 618, Prestressed Concrete I (BT42), with a pay unit of Feet which shall be measured by dimension L.

When approved by the Engineer, a minimum of tack welding will be permitted on ASTM A706 uncoated reinforcing steel.

Reinforcing projecting from the top of the girder and reinforcing within eight feet of an expansion device in the bridge deck shall be epoxy coated. Damaged coating on girder reinforcing need not be repaired. The minimum cover for reinforcing steel is 1".

At girder ends not embedded in concrete diaphragms, cut strands off 1" below the surface of the concrete and finish with an approved epoxy grout. At girder ends embedded in concrete diaphragms, cut strands to project 3", except as shown. Do not make cosmetic repairs (damage less than 1 1/2" deep) to the parts of the girders embedded in concrete.

Use low relaxation strands meeting the requirements of ASTM A-416 Grade 270. The minimum clear distance between groups or individual strands shall be 2.3($d_s$) but not less than 1 1/4". The minimum cover for prestressing steel is 1 1/2".

A minimum of two harping points shall be used per girder. Harped strands shall be well distributed at the girder ends, starting within 4" of the top of the girder and distributed such that there is no space between strands greater than 1'-0" at the end of the girder. As an alternate the Contractor may place #4● x 10'-0" in the sides of the end of the web parallel to the harped strands such that there is no space greater than 1'-0".

$A_s$*= minimum area of the prestressing steel.
$d_s$ = nominal strand diameter.
$f'_s$ = ultimate strength of prestressing steel.
$F_j$ = jacking force per girder.
$F_f$ = final force per girder after all losses.
$f'_{ci}$ = required concrete strength at release of prestress force.
$f'_c$ = required concrete strength at 28 days of age.
L = length of girder along the grade of the girder.
Δ = deflection at centerline of span due to cast-in-place slab, diaphragms, asphalt, curbs, rails, and walks.

Concrete shall be Class PS.

Entrained air is not required for girder concrete.

Use 1/2" chamfer on all corners, except as noted.

Predicted camber is the camber for the girder alone at 90 days. The Contractor shall limit the camber growth to a value not to exceed the predicted camber plus 1" prior to the deck pour by weighting, scheduling fabrication, post tensioning, or other means and must report to the Engineer values of camber which exceed the predicted camber plus 1". Remedial measures, as approved by the Engineer, shall be taken if the predicted camber plus 1" is exceeded. The approved remedial measures shall be free of any adverse impact. The costs associated with all remedial measures shall be borne by the Contractor.

| Revision Dates (Preliminary Stage Only) | 1/97 | 3/99 | 4/99 | 11/99 | 4/02 | 9/02 | 2/06 | 3/07 |
|---|---|---|---|---|---|---|---|---|

| Quantities | INITIAL | DATE |
|---|---|---|
| Quantities By | JSV | 11/07 |
| Checked By | PPC | 11/07 |

| Detail | INITIAL | DATE |
|---|---|---|
| Detailed By | JSV | 10/07 |
| Checked By | PPC | 11/07 |

| Design | INITIAL | DATE |
|---|---|---|
| Designed By | PPC | 09/07 |
| Checked By | MCY | 09/07 |

Print Date: 8/26/2008
Drawing File Name: 15 Sheet_B-618-BT.dgn
Horiz. Scale: 1:1.00001 Vert. Scale: As Noted
Staff Bridge Branch - Unit 0221 Unit Leader STW

| Sheet Revisions | | |
|---|---|---|
| Date: | Comments | Init. |
| | | |
| | | |
| | | |
| | | |


Colorado Department of Transportation
4201 East Arkansas Avenue
Room 107
Denver, CO 80222
Phone: 303-512-4072 FAX: 303-757-9197
Staff Bridge Branch STW


As Constructed
No Revisions:
Revised:
Void:

PRESTRESSED CONCRETE I (SHEET 1 OF 2)

Designer: P. Chomsrimake
Detailer: C. Lenway
Structure Numbers: F-12-BW
Sheet Subset: Bridge
Subset Sheets: B15 of 25

Project No./Code
STA 0091-035
16439
Sheet Number 78

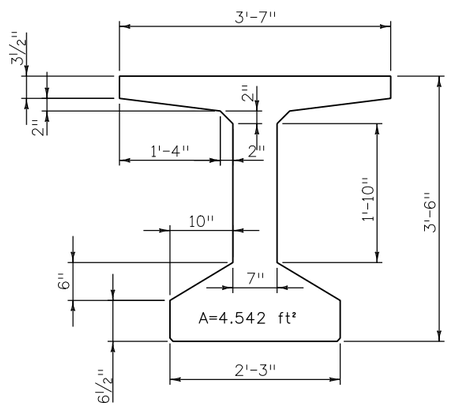


BT 42 DETAIL

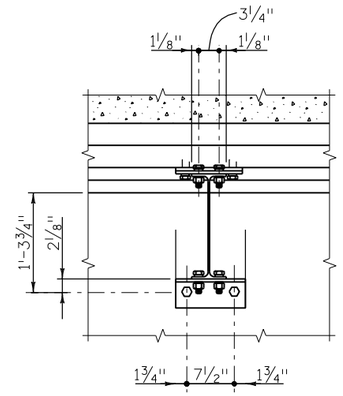


SECTION (B/A)

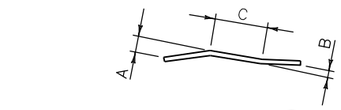


▲ SECTION (B/C)

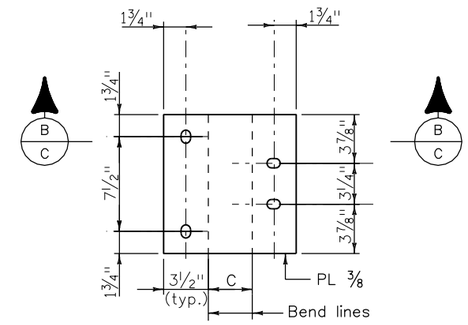


PLAN
(Before bending)

PLATE DETAIL

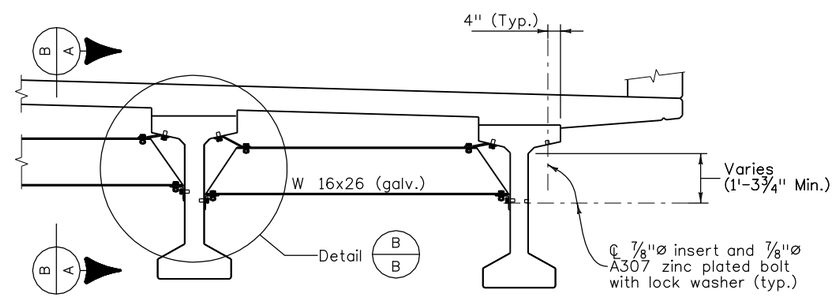


INTERMEDIATE DIAPHRAGM DETAILS

For location of diaphragms, see Construction Layout.

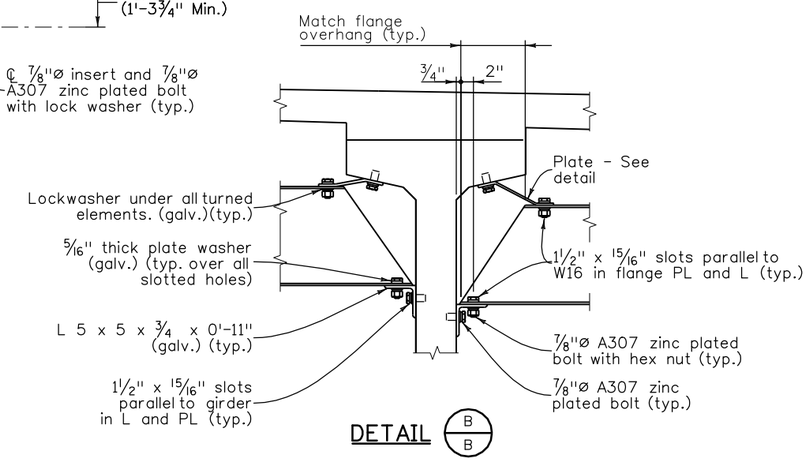


DETAIL (B/B)

## NOTES

All diaphragm materials, including bolts, nuts, and washers shall be galvanized. Galvanize after fabrication.

Bolts, nuts and lock washers may be zinc plated in lieu of being galvanized.

▲ Dimensions A, B and C shall be shown on the shop drawings.

The diaphragms may be placed on a skew such that they are between 80° and 100° to the girders. Additionally, all diaphragms shall be installed level.

The Contractor is responsible for determining necessary bracing requirements and for providing adequate bracing for the specific wind and weather conditions to be encountered for each specific project.

When bracing or diaphragms are required, no girders shall be erected and left unbraced. The intermediate diaphragms (when used) shall be connected to the adjacent girders simultaneously with the erection of the girders.

Use and installation of the intermediate diaphragms shall not relieve the Contractor of full responsibility to construct the Work in a manner which provides all necessary rigidity, supports all loads imposed, and provides in the finished structure the lines and grades indicated on the plans.

| Revision Dates (Preliminary Stage Only) | | | | | | |
|---|---|---|---|---|---|---|
| 3/99 | 11/99 | 5/00 | 5/01 | 4/02 | 6/04 | 2/06 | 3/07 |

| Quantities | | | |
|---|---|---|---|
| Quantities By | INITIAL | DATE |
| Checked By | JSV | 11/07 |
| | PPC | 11/07 |

| Detail | | | |
|---|---|---|---|
| Detailed By | INITIAL | DATE |
| Checked By | JSV | 10/07 |
| | PPC | 11/07 |

| Design | | | |
|---|---|---|---|
| Designed By | INITIAL | DATE |
| Checked By | PPC | 09/07 |
| | MCY | 09/07 |

| | | | |
|---|---|---|---|
| Print Date: 8/25/2008 | | Sheet Revisions | |
| Drawing File Name: 16 Sheet_B-618-DF.dgn | | Date: | Comments | Init. |
| Horiz. Scale: 1:1.00001 Vert. Scale: As Noted | | | | |
| Staff Bridge Branch - Unit 0221 Unit Leader STW | | | | |


Colorado Department of Transportation
4201 East Arkansas Avenue
Room 107
Denver, CO 80222
Phone: 303-512-4072 FAX: 303-757-9197
Staff Bridge Branch STW


| As Constructed | PRESTRESSED CONCRETE I (SHEET 2 OF 2) | | | Project No./Code |
|---|---|---|---|---|
| No Revisions: | | | | STA 0091-035 |
| Revised: | Designer: P. Chomsrimake | Structure Numbers | F-12-BW | 16439 |
| Void: | Detailer: C. Lenway | | | |
| | Sheet Subset: Bridge | Subset Sheets: B16 of 25 | | Sheet Number 79 |

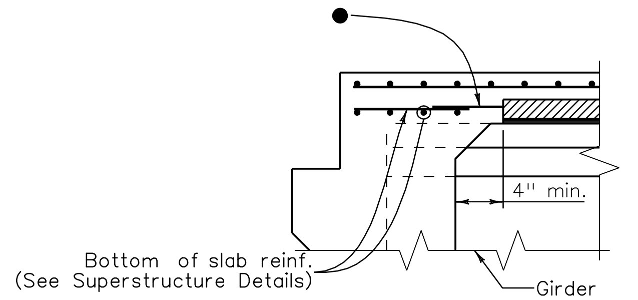


## SECTION AT ABUTMENT

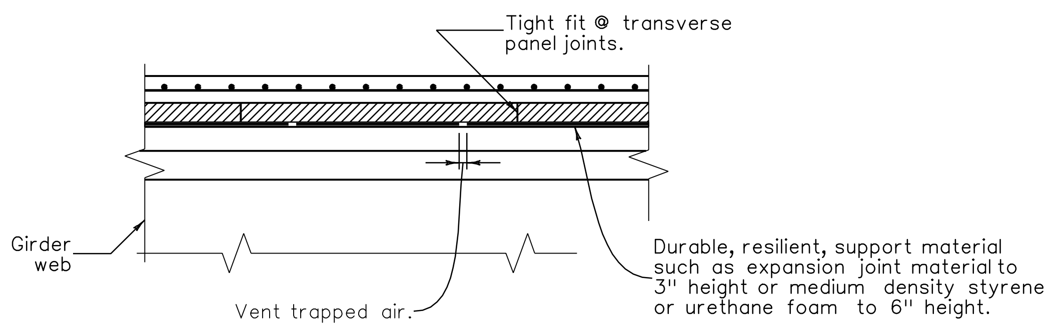


## SECTION THRU TRANSVERSE PANEL JOINTS

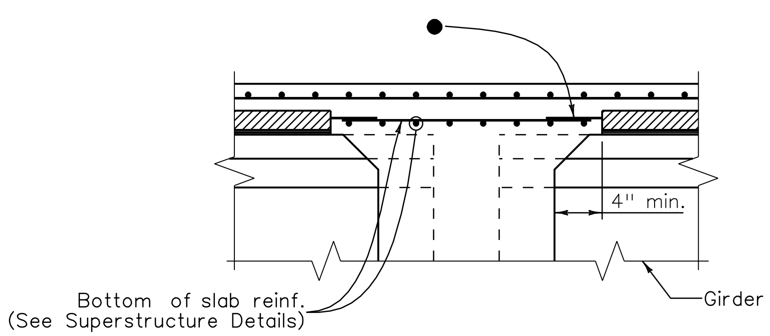


## SECTION AT PIER

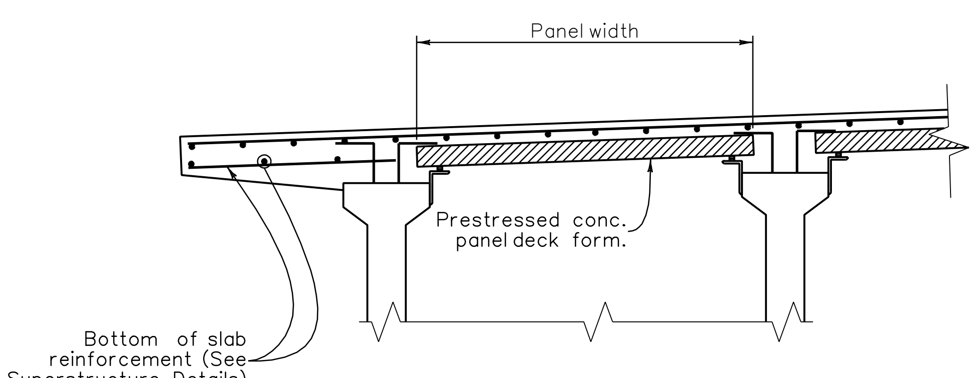


## SECTION

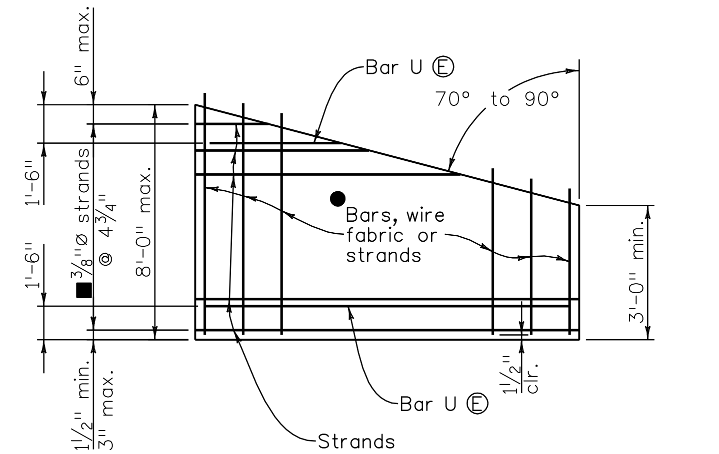


## PLAN - SKEWS 70° TO 90° OPTIONAL END PANEL

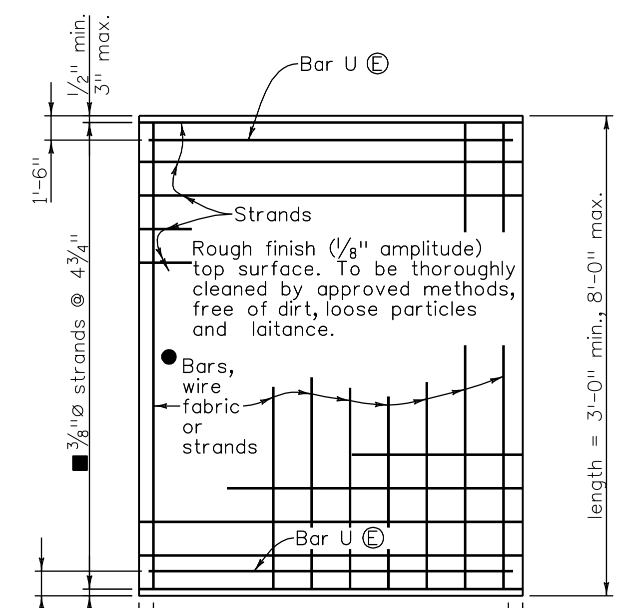


## PLAN - NORMAL

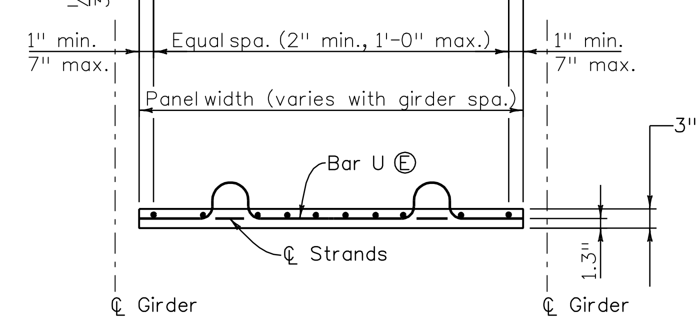


## PRESTRESSED PANEL DETAILS

## NOTES:

Sawing of panels is acceptable in areas where projecting reinforcement is not required. It is desirable to have the prestressing strands project from the panels as long as the projecting strands do not interfere with other bridge components.

● Reinforcing perpendicular to strands may be deformed reinf. bars, welded wire fabric, or welded deformed bar mats, and shall be placed directly above the strands. Minimum area of reinforcing perpendicular to strands shall be 0.11 sq. in. per ft. Tensioned or untensioned strands may also be used. These individual bars or wires shall be no larger than .375" diameter. For location of longitudinal bar extensions, see sheet 2 of 2.

■ May be reduced to 3/8"ø strands at 9 1/2" when the panel width is less than 5'-7" and the design span is less than 7'-7".

The longitudinal reinforcing steel in the cast-in-place portion of the deck may rest directly on the panels as necessary to obtain clearances at the top of deck, unless otherwise noted.

Ⓔ denotes epoxy coated reinforcing.

The tolerance on strand placement shall not exceed ±1/4".

The tolerance on panel thickness shall not exceed ±1/4".

Concentrated construction loads shall not exceed 500 lb for 3" panels, 700 lb for 3.5" panels, nor 1100 lb for 4" panels unless the load is distributed to less than 117 psf.

Total loads applied to any panel during construction shall not exceed 117 psf.

Bottom flexural cracks, sags greater than .5", or cambers greater than .5" will be considered evidence of mishandling, overloading, or exceeding allowable tolerances, and may be cause for rejecting panels at the Engineer's discretion.

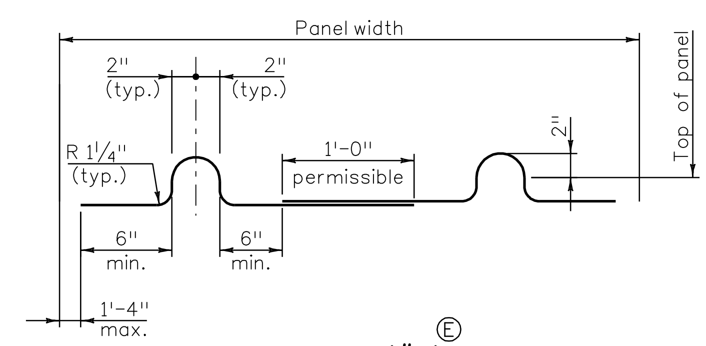


## BAR U (#3) Ⓔ PRESTRESSED PANEL DETAILS

| Revision Dates (Preliminary Stage Only) | | | | | | | |
|---|---|---|---|---|---|---|---|
| 2/93 | 9/93 | 3/94 | 3/99 | 11/99 | 4/02 | 6/04 | 3/07 |

| | | INITIAL | DATE |
|---|---|---|---|
| Quantities | Quantities By | JSV | 11/07 |
| | Checked By | PPC | 11/07 |
| Detail | Detailed By | JSV | 10/07 |
| | Checked By | PPC | 11/07 |
| Design | Designed By | PPC | 09/07 |
| | Checked By | MCY | 09/07 |

Print Date: 8/25/2008
Drawing File Name: 17 Sheet_B-601-4C.dgn
Horiz. Scale: 1:1.00001 Vert. Scale: As Noted
Staff Bridge Branch - Unit 0221 Unit Leader STW

| Sheet Revisions | | |
|---|---|---|
| Date: | Comments | Init. |
| | | |
| | | |
| | | |
| | | |

Colorado Department of Transportation
4201 East Arkansas Avenue
Room 107
Denver, CO 80222
Phone: 303-512-4072 FAX: 303-757-9197
Staff Bridge Branch STW

As Constructed
No Revisions:
Revised:
Void:

PRECAST PANEL DECK FORM (SHEET 1 of 2)

Designer: P. Chomsrimake | Structure Numbers: F-12-BW
Detailer: C. Lenway
Sheet Subset: Bridge | Subset Sheets: B17 of 25

Project No./Code
STA 0091-035
16439
Sheet Number 80

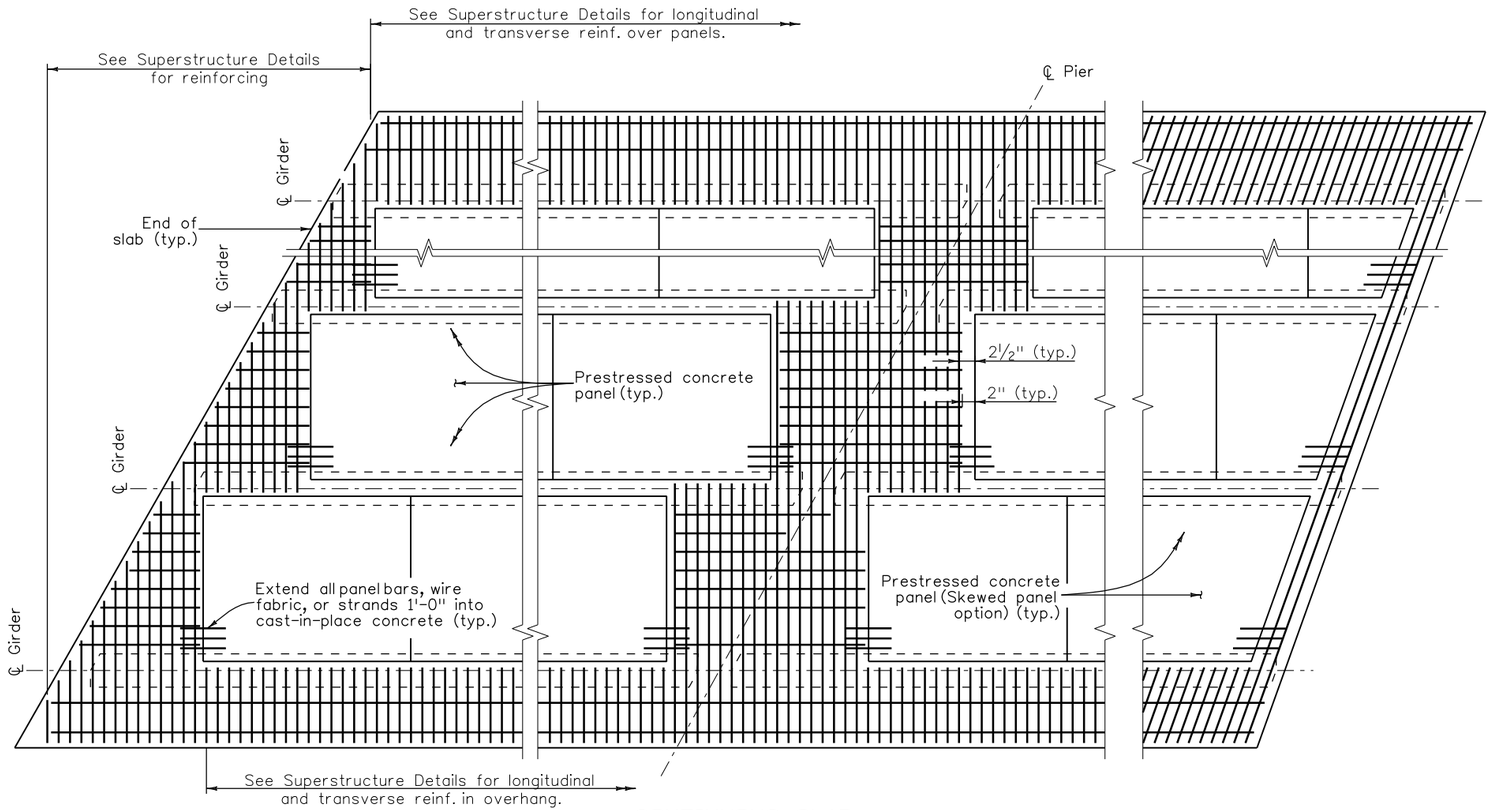


## END OF SLAB RECTANGULAR PANEL OPTION AND SKEWS LESS THAN 70°

Rectangular panel option shall be used for skews less than 70°.

## CONTINUOUS SLAB OVER PIER

## PART PLAN

## END OF SLAB SKEWED PANEL OPTION FOR SKEWS 70° to 90°

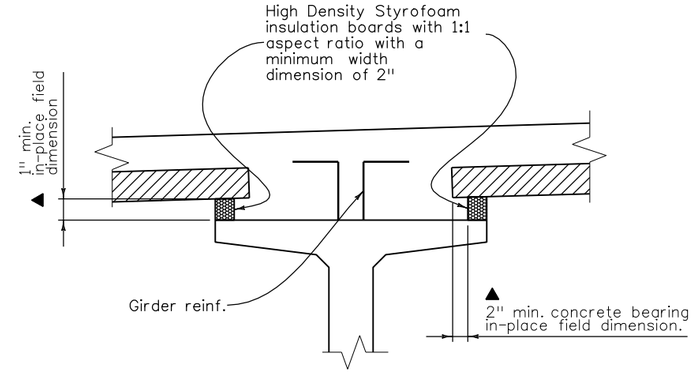


## ALTERNATE SUPPORT DETAIL

## NOTES:

Composite total slab designed for HS 25-44 and Alternate Military Loading.

All concrete shall be Class PS with release strength $f'_{ci}$ = 4500 psi and minimum 28 day strength $f'_c$ = 6000 psi. Entrained air is not required for precast panel deck form concrete. The strength shall be at least 5000 psi at the time of the deck pour.

Use 3/8"Ø low relaxation strands meeting the requirements of ASTM A416 grade 270. Jacking force per strand ($F_i$) shall be at least 17.2 kips. Final force per strand ($F_f$) is estimated to be 14.2 kips.

Installation of Bar U (#3) is mandatory. All four Bar U (#3) loops shall be used simultaneously for lifting the panels.

Care must be taken to ensure proper cleaning of construction debris off the tops of the panels and consolidation of concrete mortar under the edges of the panels. Water, dirt or other debris on top of the panels will inhibit the bond of the cast-in-place concrete. It is also important that adequate space (▲ min. 1" x 2") is provided for the concrete to fill the space under the panel as the slab concrete is placed. Panel lengths and width shall be determined by the Contractor and shown on the shop plans.

The Contractor is responsible for the stability of the panels on the girders. Erected panels shall be uniformly supported along the length of the panel. The Contractor is responsible for meeting the total slab thickness shown on the Superstructure Details.

All planes of reinforcing steel shown in the superstructure details are required for areas not formed with precast panels.

High Density styrofoam shall have a minimum compressive strength of 100 PSI and a minimum density of 3.5 lbs. per cu. ft.

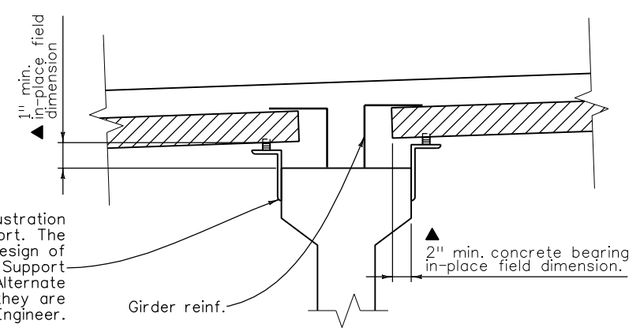


The angle and resilient material are shown for illustration and show only one potential method of support. The Contractor is responsible for the selection and design of the panel support and attachment to the girder. Support details shall be shown on the shop plans. Alternate methods for support may be used, provided they are shown on the shop plans and approved by the Engineer.

## SUPPORT DETAIL

| Revision Dates (Preliminary Stage Only) | | | | | | |
|---|---|---|---|---|---|---|
| 12/91 | 2/93 | 3/94 | 3/99 | 11/99 | 4/02 | 2/06 | 3/07 |

| Quantities | | |
|---|---|---|
| | INITIAL | DATE |
| Quantities By | JSV | 11/07 |
| Checked By | PPC | 11/07 |

| Detail | | |
|---|---|---|
| | INITIAL | DATE |
| Detailed By | JSV | 10/07 |
| Checked By | PPC | 11/07 |

| Design | | |
|---|---|---|
| | INITIAL | DATE |
| Designed By | PPC | 09/07 |
| Checked By | MCY | 09/07 |

Print Date: 8/25/2008
Drawing File Name: 18 Sheet_B-601-5C.dgn
Horiz. Scale: 1:1.00001 Vert. Scale: As Noted
Staff Bridge Branch - Unit 0221 Unit Leader STW

| Sheet Revisions | | |
|---|---|---|
| Date: | Comments | Init. |
| | | |
| | | |
| | | |
| | | |


Colorado Department of Transportation
4201 East Arkansas Avenue
Room 107
Denver, CO 80222
Phone: 303-512-4072 FAX: 303-757-9197
Staff Bridge Branch STW


As Constructed
No Revisions:
Revised:
Void:

PRECAST PANEL DECK FORM (SHEET 2 of 2)

Designer: P. Chomsrimake
Detailer: C. Lenway
Structure Numbers: F-12-BW
Sheet Subset: Bridge
Subset Sheets: B18 of 25

Project No./Code
STA 0091-035
16439
Sheet Number 81

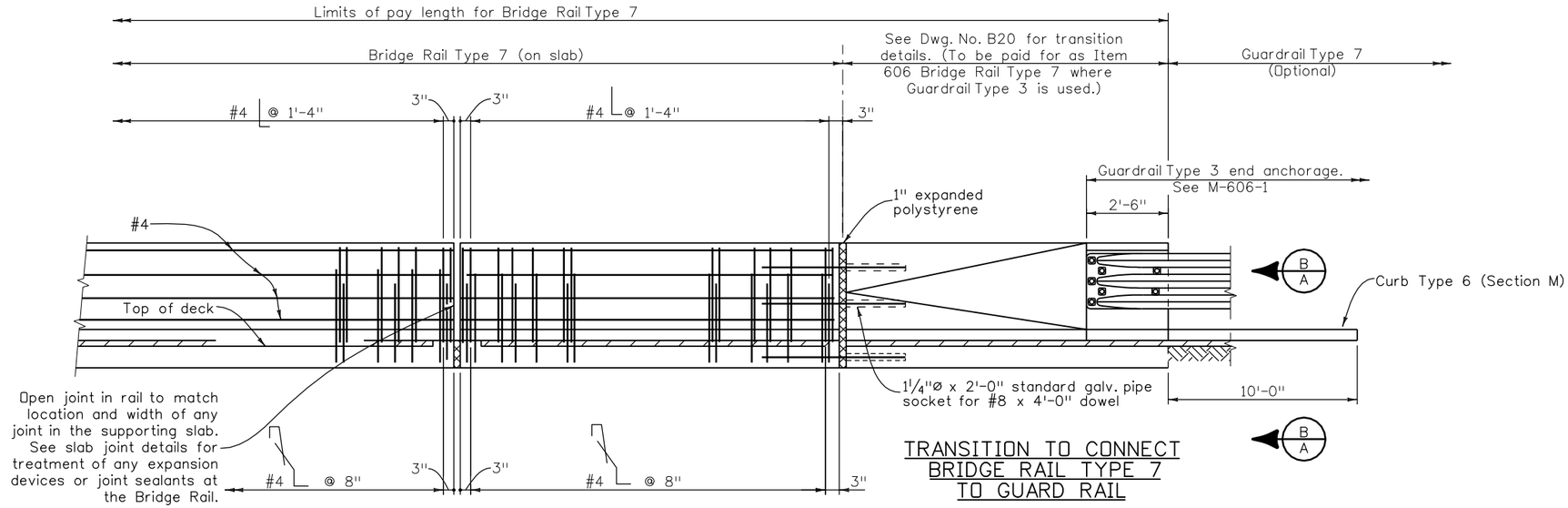


TRANSITION TO CONNECT BRIDGE RAIL TYPE 7 TO GUARD RAIL

ELEVATION

#8 dowels between bridge rail and guardrail are not required when the guardrail is placed on the sleeper slab.

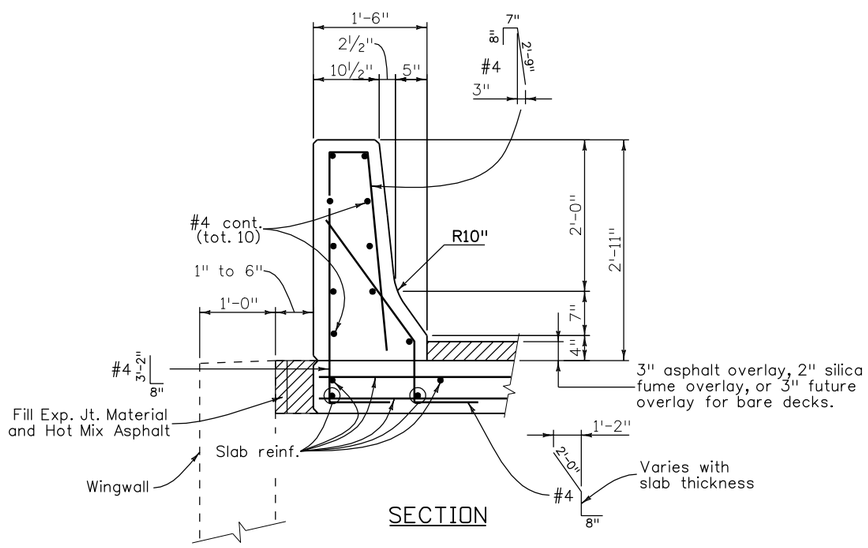


SECTION

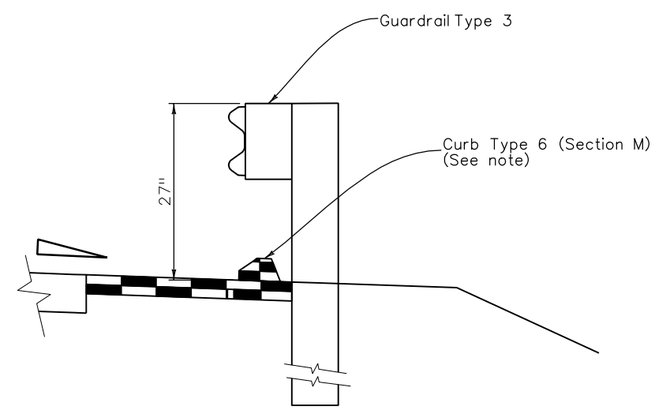


SECTION B/A

## NOTES:

Backfill wingwalls and retaining walls before barrier is placed.

All bridge rail concrete shall be Class D.

Longitudinal reinforcement shall stop at all expansion joints.

Bridge rail shall be constructed plumb.

See Std. M-606-1 and M-606-13 for Guard Rail Type 3 details and details of transition.

Concrete and reinforcing steel shall conform to the requirements of Sections 601 and 602. Payment will be made under Item 606, Bridge Rail Type 7.

The surface of the rail shall be tested with a 10 foot straight edge laid along the surface in the longitudinal direction. Deviation of the concrete surface from the straight edge shall be less than ¼" plus allowance for roadway horizontal and vertical curvature, if any.

Curb Type 6 (Section M) will be included in roadway quantity.

## DESIGN DATA

Reinforced concrete:

Class D Concrete: $f'_c$ = 4,500 psi
Reinforcing steel: $f_y$ = 60,000 psi

## INFORMATION ONLY

| Description | Unit | Per Lin. Ft. |
|---|---|---|
| | | |
| Concrete Class D | Cu. Yd. | 0.12 |
| | | |
| Reinforcing Steel (Epoxy) | Lb. | 16.2 |
| | | |
| | | |

| Revision Dates (Preliminary Stage Only) | | | | | | |
|---|---|---|---|---|---|---|
| 8/95 | 10/98 | 3/99 | 11/99 | 5/00 | 5/01 | 4/02 | 3/07 |

| Design | | | Detail | | | Quantities | | |
|---|---|---|---|---|---|---|---|---|
| | INITIAL | DATE | | INITIAL | DATE | | INITIAL | DATE |
| Designed By | PPC | 09/07 | Detailed By | JSV | 10/07 | Quantities By | JSV | 11/07 |
| Checked By | MCY | 09/07 | Checked By | PPC | 11/07 | Checked By | PPC | 11/07 |

Print Date: 9/19/2008
Drawing File Name: 19 Sheet_B-606-7B.dgn
Horiz. Scale: 1:1.00001 Vert. Scale: As Noted
Staff Bridge Branch - Unit 0221 Unit Leader STW

| Sheet Revisions | | |
|---|---|---|
| Date: | Comments | Init. |
| | | |
| | | |
| | | |
| | | |

Colorado Department of Transportation
4201 East Arkansas Avenue
Room 107
Denver, CO 80222
Phone: 303-512-4072 FAX: 303-757-9197
Staff Bridge Branch STW

As Constructed
No Revisions:
Revised:
Void:

BRIDGE RAIL TYPE 7
(SHEET 1 of 2)

Designer: P. Chomsrimake
Detailer: C. Lenway
Structure Numbers F-12-BW
Sheet Subset: Bridge
Subset Sheets: B19 of 27

Project No./Code
STA 0091-035
16439
Sheet Number 82

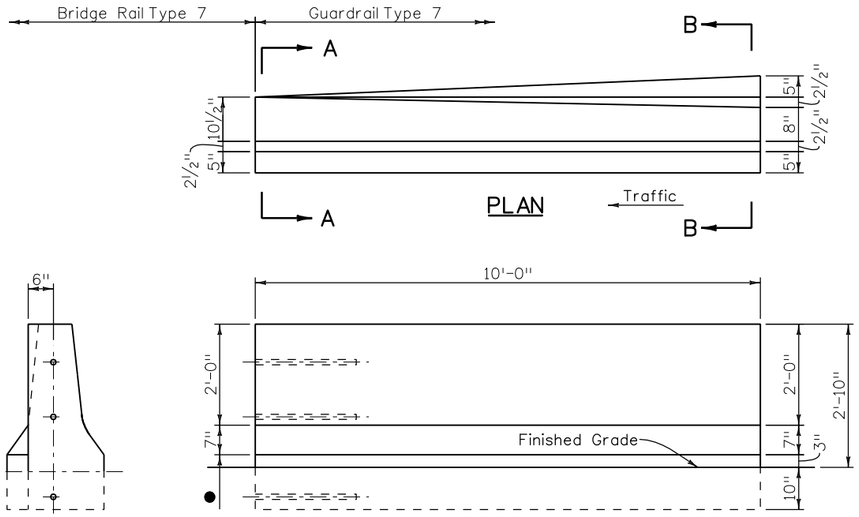


END

● Match bridge rail. 1" when bridge deck has 3" overlay, 2" when bridge deck has a 2" silica fume overlay and 4" when bridge deck does not have an overlay.

PLAN

ELEVATION

## BRIDGE RAIL TYPE 7 TO ROADWAY SHOULDER TYPE 7 END TRANSITION

(Measured and paid for as Guardrail Type 7. See M-606-13 sheet 2, transition detail, for reinforcement information.)

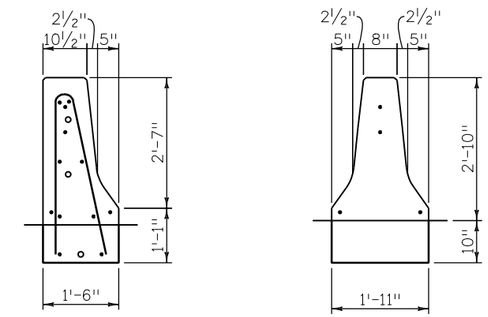


SECTION A-A

SECTION B-B

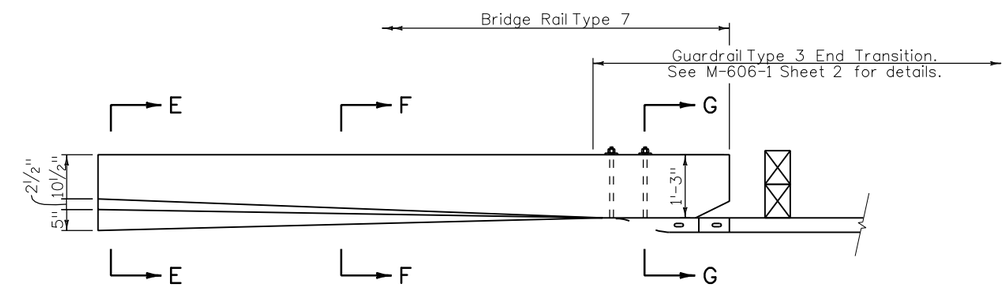


PLAN

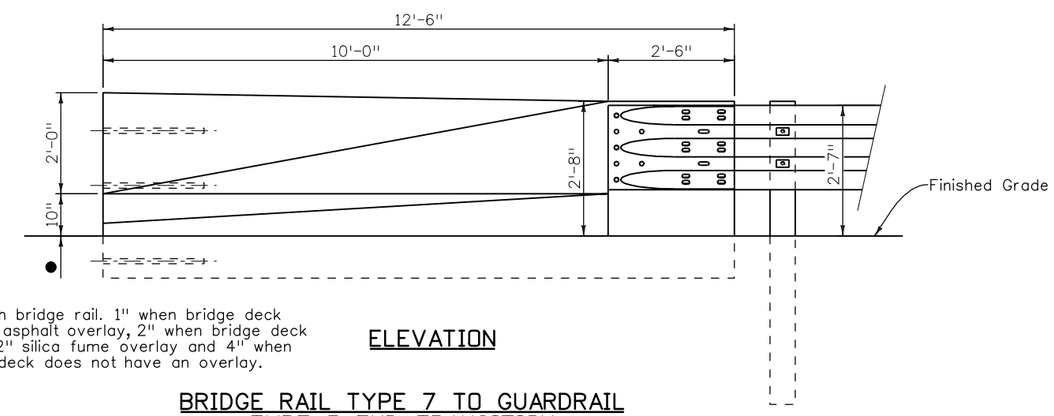


● Match bridge rail. 1" when bridge deck has 3" asphalt overlay, 2" when bridge deck has a 2" silica fume overlay and 4" when bridge deck does not have an overlay.

ELEVATION

## BRIDGE RAIL TYPE 7 TO GUARDRAIL TYPE 3 END TRANSITION

(Measured and paid for as Bridge Rail Type 7. See sheet B19 for transition detail.)

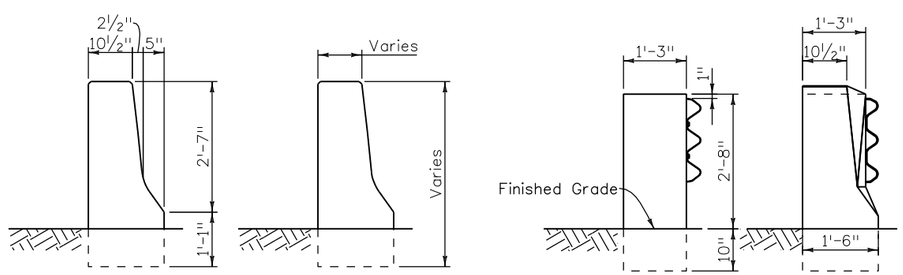


SECTION E-E

SECTION F-F

SECTION G-G

| Revision Dates | | | | |
|---|---|---|---|---|
| 5/00 | 5/01 | 4/02 | 3/07 | (Preliminary Stage Only) |

| Quantities | | |
|---|---|---|
| | INITIAL | DATE |
| Quantities By | JSV | 11/07 |
| Checked By | PPC | 11/07 |

| Detail | | |
|---|---|---|
| | INITIAL | DATE |
| Detailed By | JSV | 10/07 |
| Checked By | PPC | 11/07 |

| Design | | |
|---|---|---|
| | INITIAL | DATE |
| Designed By | PPC | 09/07 |
| Checked By | MCY | 09/07 |

Print Date: 9/19/2008
Drawing File Name: 20 Sheet_B-606-7T.dgn
Horiz. Scale: 1:1.00001 Vert. Scale: As Noted
Staff Bridge Branch - Unit 0221 Unit Leader STW

| Sheet Revisions | | |
|---|---|---|
| Date: | Comments | Init. |
| | | |
| | | |
| | | |
| | | |


Colorado Department of Transportation
4201 East Arkansas Avenue
Room 107
Denver, CO 80222
Phone: 303-512-4072 FAX: 303-757-9197
Staff Bridge Branch STW


As Constructed
No Revisions:
Revised:
Void:

BRIDGE RAIL TYPE 7 (SHEET 2 of 2)

Designer: P. Chomsrimake
Detailer: C. Lenway
Sheet Subset: Bridge
Structure Numbers: F-12-BW
Subset Sheets: B20 of 25

Project No./Code
STA 0091-035
16439
Sheet Number 83

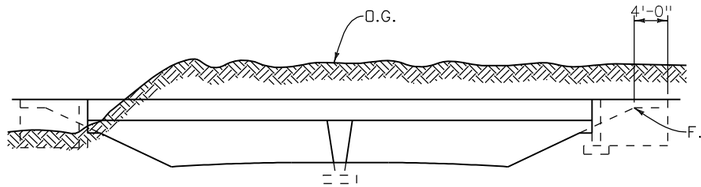


ELEVATION

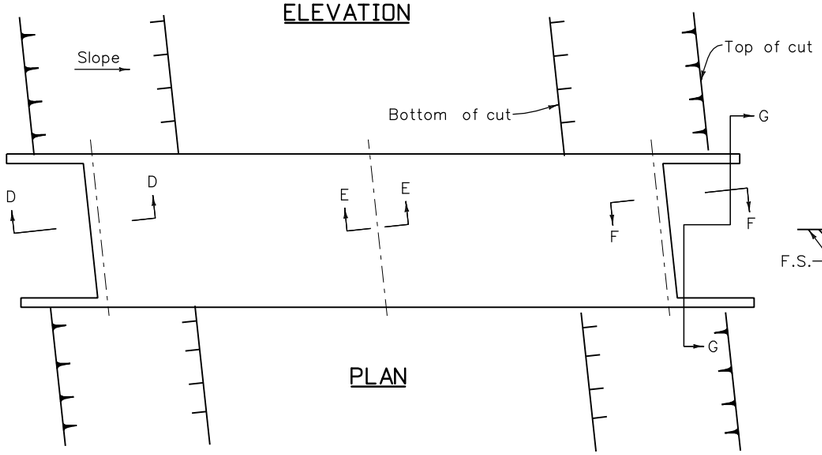


PLAN

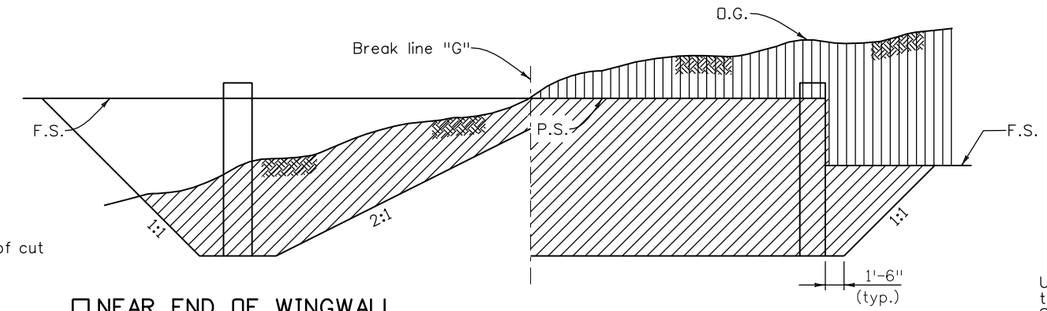


☐ NEAR END OF WINGWALL

NEAR B.F. OF ABUTMENT

SECTION G-G (EXCAVATION)

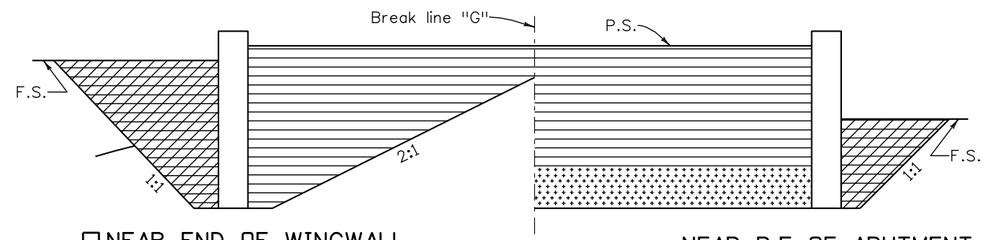


☐ NEAR END OF WINGWALL

NEAR B.F. OF ABUTMENT

SECTION G-G (BACKFILL)

## GENERAL NOTES

Unless shown otherwise in the plans, this drawing gives the minimum extent of Structure Excavation and Structure Backfill. The Contractor may elect to extend the Structure Excavation and Structure Backfill beyond the limits shown here. Any additional Excavation or Backfill beyond these limits will not be measured nor paid for.

Structure footings which are located in rock shall be poured out to undisturbed rock, without forming, in conformance with 601.09.

Structure Excavation for Slope Paving not shown.

☐ For purposes of quantity calculations this template applies out to end of wingwall.

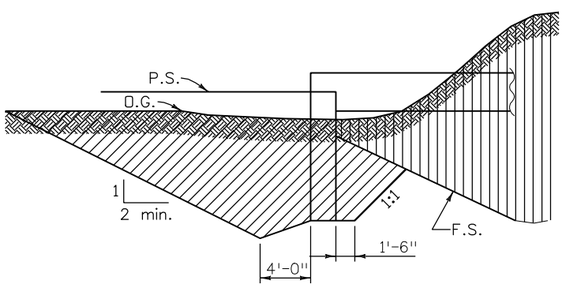


SECTION D-D (EXCAVATION)

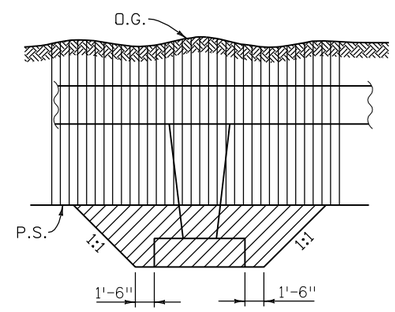


SECTION E-E (EXCAVATION)

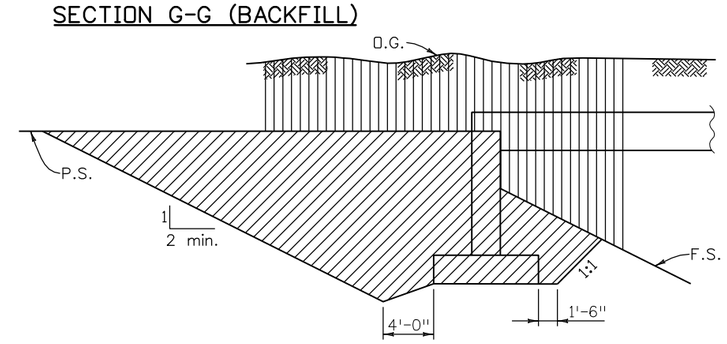


SECTION F-F (EXCAVATION)

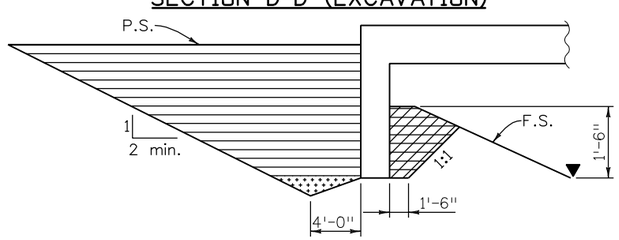


SECTION D-D (BACKFILL)

* = Minimum berm dimension.
▼ = Minimum embedment, of abut., in Structure Backfill.

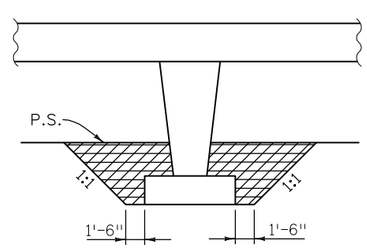


SECTION E-E (BACKFILL)

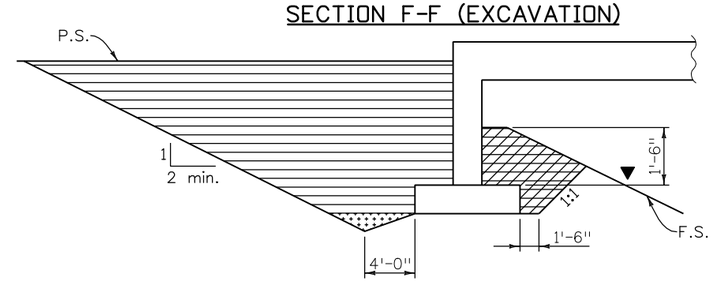


SECTION F-F (BACKFILL)

## LEGENDS

- Roadway Excavation
- Structure Excavation
- Structure Backfill (flowfill), or Structure Backfill (Class 1) with Mechanical Reinforcement of Soil, as shown elsewhere in the plans.
- Structure Backfill (Class 2)
- Filter Material

## ABBREVIATIONS

| | |
|---|---|
| O.G. | Original Ground |
| P.S. | Planned Subgrade |
| F.S. | Planned Finished Surface |

| Revision Dates (Preliminary Stage Only) | | | | | | |
|---|---|---|---|---|---|---|
| 8/95 | 1/97 | 3/99 | 11/99 | 5/00 | 4/02 | 9/02 | 3/07 |

| Quantities | | | |
|---|---|---|---|
| Quantities By | INITIAL | DATE | |
| Checked By | JSV | 11/07 | |
| | PPC | 11/07 | |

| Detail | | | |
|---|---|---|---|
| Detailed By | INITIAL | DATE | |
| Checked By | JSV | 10/07 | |
| | PPC | 11/07 | |

| Design | | | |
|---|---|---|---|
| Designed By | INITIAL | DATE | |
| Checked By | PPC | 09/07 | |
| | MCY | 09/07 | |

Print Date: 8/25/2008
Drawing File Name: 21 Sheet_B-206-3.dgn
Horiz. Scale: 1:1.00001 Vert. Scale: As Noted
Staff Bridge Branch - Unit 0221 Unit Leader STW

| Sheet Revisions | | |
|---|---|---|
| Date: | Comments | Init. |
| | | |
| | | |
| | | |
| | | |


Colorado Department of Transportation
4201 East Arkansas Avenue
Room 107
Denver, CO 80222
Phone: 303-512-4072 FAX: 303-757-9197
Staff Bridge Branch STW


As Constructed
No Revisions:
Revised:
Void:

EXCAVATION AND BACKFILL FOR BRIDGES IN CUT

Designer: P. Chomsrimake
Detailer: C. Lenway
Sheet Subset: Bridge
Structure Numbers: F-12-BW
Subset Sheets: B21 of 25

Project No./Code
STA 0091-035
16439
Sheet Number 84

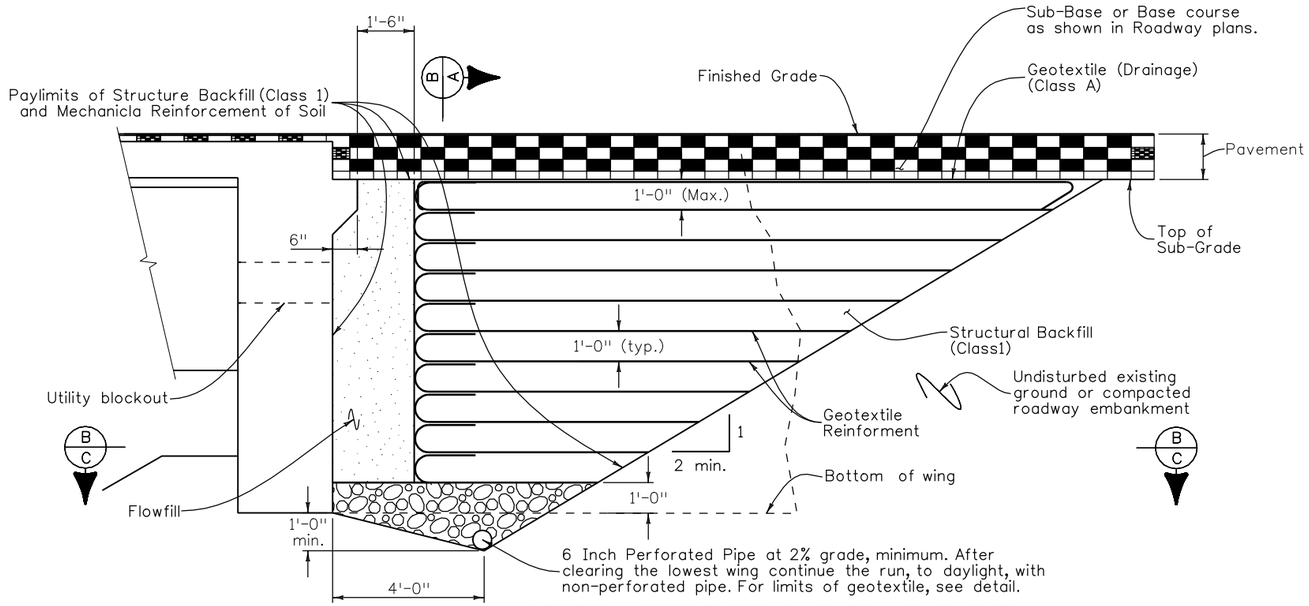


SECTION PERPENDICULAR TO ABUTMENT

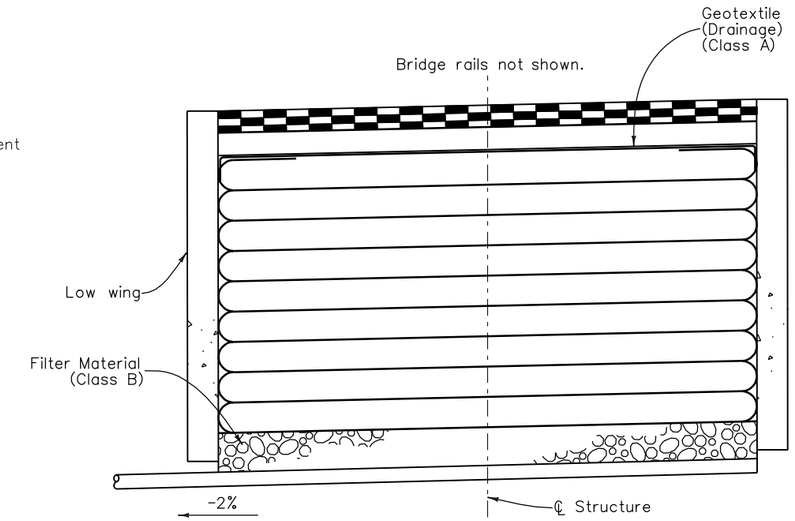


SECTION B/A

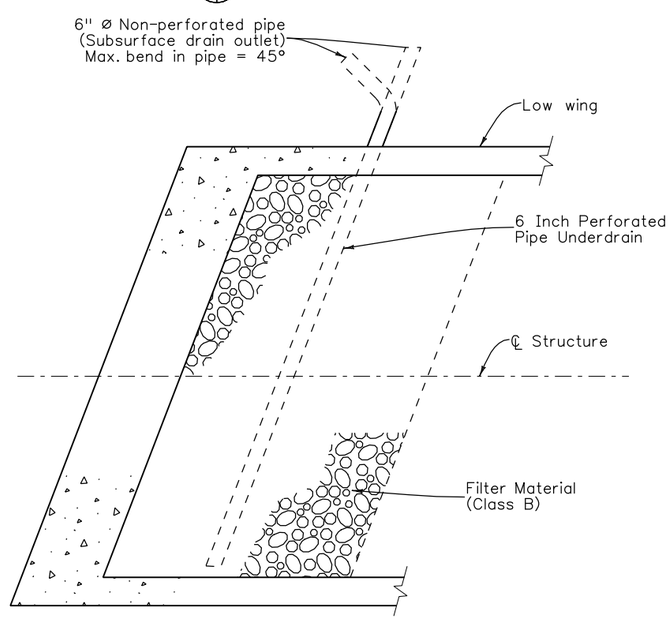


SECTION B/C

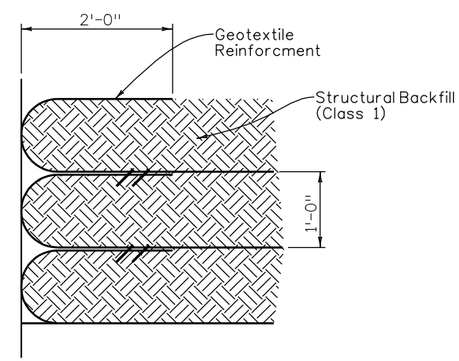


WRAP DETAIL

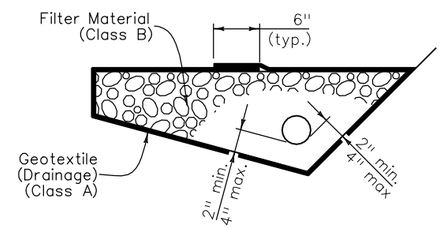


6 INCH PERFORATED PIPE UNDERDRAIN

6 Inch Perforated Pipe Underdrain includes all Filter Material (Class B) and Geotextile (Drainage) (Class A) surrounding the Filter Material (Class B).

## NOTES:

Geotextile Reinforcement shall be woven fabric with a Minimum Average Roll Value of 2400 lb/ft based on ASTM D4595.

Geotextile Reinforcement shall be placed by alternating Machine Direction (MD) with Cross Machine Direction (XD) from layer to layer.

The Geotextile Reinforcement wrap at Back Face of Abutment shall be pulled back slack free with its end anchored to soil underneath with staples or pins.

Minimum splice of all Geofabric shall consist of 6" of overlap.

Payment will be made under item 206 Mechanical Reinforcement of Soil (cu.yd.) and item 206 Structure Backfill (Class 1) (cu.yd.) and shall include the cost for 6 Inch Perforated Pipe Underdrain and Subsurface Drain Outlet (6"ø Non-Perforated Pipe).

Installation of Pipe Underdrain and Subsurface Drain Outlet will Conform to the Construction requirements of section 605.03 and 605.06, respectively.

| Design | | | Detail | | | Quantities | | |
|---|---|---|---|---|---|---|---|---|
| | INITIAL | DATE | | INITIAL | DATE | | INITIAL | DATE |
| Designed By | PPC | 09/07 | Detailed By | JSV | 10/07 | Quantities By | JSV | 11/07 |
| Checked By | MCY | 09/07 | Checked By | PPC | 11/07 | Checked By | PPC | 11/07 |

| Revision Dates (Preliminary Stage Only) | | | | | |
|---|---|---|---|---|---|
| 5/00 | 5/01 | 4/02 | 9/02 | 3/07 | |

Print Date: 8/25/2008
Drawing File Name: 22 Sheet_B-206-M2.dgn
Horiz. Scale: 1:1.00001 Vert. Scale: As Noted
Staff Bridge Branch - Unit 0221 Unit Leader STW

| Sheet Revisions | | |
|---|---|---|
| Date: | Comments | Init. |
| | | |
| | | |
| | | |
| | | |


Colorado Department of Transportation
4201 East Arkansas Avenue
Room 107
Denver, CO 80222
Phone: 303-512-4072 FAX: 303-757-9197
Staff Bridge Branch STW


As Constructed
No Revisions:
Revised:
Void:

MECHANICALLY STABILIZED BACKFILL

Designer: P. Chomsrimake
Detailer: C. Lenway
Structure Numbers: F-12-BW
Sheet Subset: Bridge
Subset Sheets: B22 of 25

Project No./Code
STA 0091-035
16439
Sheet Number 85

STRUCTURE ID: F-12-BW BRIDGE GEOMETRY (WIN2.1.0e) 08/05/09 14:11

DESCRIPTION

Units: feet;
Project: C 0091-035; Subaccount: 16439;
Designer: PPC; Detailer: JSV;
Location: Frisco, CO;
SH9 over Blue River Bridge
Single Span Prestressed BT42 Girder (Final Construction)
CDOT Region 1
Frisco, CO

HORIZONTAL ALIGNMENT DATA

HORIZONTAL TANGENT

VERTICAL ALIGNMENT DATA

| ELEVATION AT PI | ELEVATION AT GRADE | STATION | | ELEVATION AT GRADE | ELEVATION AT PI | PERCENT GRADE |
|---|---|---|---|---|---|---|
| | | | | | | -0.500000 |
| | | 166+50.0000 | PC | 9196.6000 | | |
| | | 168+00.0000 | PI | 9194.7200 | 9195.8500 | |
| | | 169+50.0000 | PT | 9190.5800 | | |
| | | | | | | -3.513333 |

TABLE OF ROADWAY CROSS-SLOPES (SUPERELEVATION: E= -NC- )

| STATION | SLOPE LEFT | SLOPE RIGHT | VC LENGTH |
|---|---|---|---|
| (ON TANGENT) | -0.0200 | -0.0200 | 50.00 (MAX) |

OFFSET PROFILE CONTROL TO PIVOT POINT = 0.0000 FEET

LIMITS OF VALID ELEVATION AND CROSS-SLOPE DATA BEGIN 167+00.0000 END 169+90.0000

LAYOUT LINE DATA

LAYOUT LINE DEFINED TO BE COINCIDENT WITH HORIZONTAL CONTROL

| | HCL STA | OFFSET | X | Y |
|---|---|---|---|---|
| LAYOUT LINE INTERSECTS REF LINE AT | 167+78.5000 | 0.00000000 | 0.0000 | 0.0000 |

DEAD LOAD DEFLECTION DATA

DEFLECTIONS AT TENTH POINTS FROM FITTED CURVE

| | 0.0 | 0.1 | 0.2 | 0.3 | 0.4 | 0.5 | 0.6 | 0.7 | 0.8 | 0.9 | 1.0 | |
|---|---|---|---|---|---|---|---|---|---|---|---|---|
| FOR BENT LINE: Interior Girders 07 CARD(S): 1 GIRDER LINES REFERENCED BY: (BLANK) | | | | | | | | | | | | |
| | | | | | | | | | | | | A4= 0.00000 |
| INCH | 0.0000 | 0.4640 | 0.8819 | 1.2109 | 1.4205 | 1.4924 | 1.4205 | 1.2109 | 0.8819 | 0.4640 | 0.0000 | INCH A3= 0.00000 |
| FOOT | 0.0000 | 0.0387 | 0.0735 | 0.1009 | 0.1184 | 0.1244 | 0.1184 | 0.1009 | 0.0735 | 0.0387 | 0.0000 | FOOT A2= 5.08435 |
| | | | | | | | | | | | | A1=-5.08435 |
| SLOPE | 0.391535 | | | | | | | | | | -0.391535 | SLOPE A0=-4.69842 |
| FOR BENT LINE: * Exterior Girders * 07 CARD(S): 1 GIRDER LINES REFERENCED BY: (BLANK) | | | | | | | | | | | | |
| | | | | | | | | | | | | A4= 0.00000 |
| INCH | 0.0000 | 0.4388 | 0.8334 | 1.1439 | 1.3416 | 1.4095 | 1.3416 | 1.1439 | 0.8334 | 0.4388 | 0.0000 | INCH A3= 0.00000 |
| FOOT | 0.0000 | 0.0366 | 0.0695 | 0.0953 | 0.1118 | 0.1175 | 0.1118 | 0.0953 | 0.0695 | 0.0366 | 0.0000 | FOOT A2= 4.76531 |
| | | | | | | | | | | | | A1=-4.76531 |
| SLOPE | 0.370542 | | | | | | | | | | -0.370542 | SLOPE A0=-4.44650 |
| | 0.0 | 0.1 | 0.2 | 0.3 | 0.4 | 0.5 | 0.6 | 0.7 | 0.8 | 0.9 | 1.0 | |

| BENT LINE DESCRIPTION | STATION | OFFSET | ELEVATION | | FROM LAYOUT LINE OFFSET X | ORDINATE Y | PROJECT COORDINATES NORTHING | EASTING | BENT LINE LENGTH FROM Y-AXIS | SKEW D M S | GIRDER LINE LENGTH FROM REF LINE | ROADWAY CROSS-SLOPE |
|---|---|---|---|---|---|---|---|---|---|---|---|---|
| * HORIZONTAL CONTROL LINE * | | | AT FINISHED GRADE | | | | | | | | | |
| End WW1 | 167+50.6780 | 0.0000 | 9195.5876 | | 0.0000 | -27.8220 | 1622545.8152 | 2848501.1418 | 0.0000 | 0 00 00.00 | -27.8220 | |
| CL LT A1 | 167+64.6780 | 0.0000 | 9195.3661 | | 0.0000 | -13.8220 | 1622559.6772 | 2848503.1024 | 0.0000 | 0 00 00.00 | -13.8220 | |
| CL Abut 1 | 167+78.5000 | 0.0000 | 9195.1282 | | 0.0000 | 0.0000 | 1622573.3630 | 2848505.0380 | 0.0000 | 0 00 00.00 | 0.0000 | |
| End WW2 | 167+80.8350 | 0.0000 | 9195.0861 | | 0.0000 | 2.3350 | 1622575.6750 | 2848505.3650 | 0.0000 | 0 00 00.00 | 2.3350 | |
| CL RT A1 | 167+94.8350 | 0.0000 | 9194.8223 | | 0.0000 | 16.3350 | 1622589.5370 | 2848507.3256 | 0.0000 | 0 00 00.00 | 16.3350 | |
| CL LT A2 | 168+44.6780 | 0.0000 | 9193.7232 | | 0.0000 | 66.1780 | 1622638.8889 | 2848514.3056 | 0.0000 | 0 00 00.00 | 66.1780 | |
| CL Abut 2 | 168+58.5000 | 0.0000 | 9193.3742 | | 0.0000 | 80.0000 | 1622652.5747 | 2848516.2412 | 0.0000 | 0 00 00.00 | 80.0000 | |
| End WW3 | 168+58.6780 | 0.0000 | 9193.3696 | | 0.0000 | 80.1780 | 1622652.7509 | 2848516.2661 | 0.0000 | 0 00 00.00 | 80.1780 | |
| CL RT A2 | 168+74.8350 | 0.0000 | 9192.9371 | | 0.0000 | 96.3350 | 1622668.7487 | 2848518.5288 | 0.0000 | 0 00 00.00 | 96.3350 | |
| End WW4 | 168+88.8350 | 0.0000 | 9192.5410 | 0.0 | 0.0000 | 110.3350 | 1622682.6107 | 2848520.4893 | 0.0000 | 0 00 00.00 | 110.3350 | |
| LT Outside WW | | | PARALLEL TO HORIZONTAL CONTROL | | | | | 0.250000 FEET BELOW FINISHED GRADE | | | | |
| BENT LINE | STATION | OFFSET | ELEVATION | ELEV+DL | X | Y | NORTHING | EASTING | BENT LNTH | SKEW | GIRDER LNTH | CRS-SLP |
| End WW1 | 167+50.6780 | -44.0000 | 9194.4576 | | -44.0000 | -27.8220 | 1622551.9769 | 2848457.5754 | -44.0000 | 0 00 00.00 | -27.8220 | -0.020000 |
| CL LT A1 | 167+64.6780 | -44.0000 | 9194.2361 | | -44.0000 | -13.8220 | 1622565.8390 | 2848459.5359 | -44.0000 | 0 00 00.00 | -13.8220 | -0.020000 |
| CL LT A2 | 168+44.6780 | -44.0000 | 9192.5932 | | -44.0000 | 66.1780 | 1622645.0506 | 2848470.7392 | -44.0000 | 0 00 00.00 | 66.1780 | -0.020000 |
| End WW3 | 168+58.6780 | -44.0000 | 9192.2396 | | -44.0000 | 80.1780 | 1622658.9127 | 2848472.6997 | -44.0000 | 0 00 00.00 | 80.1780 | -0.020000 |
| LT Edge of Deck | | | PARALLEL TO HORIZONTAL CONTROL | | | | | 0.250000 FEET BELOW FINISHED GRADE | | | | |
| BENT LINE | STATION | OFFSET | ELEVATION | ELEV+DL | X | Y | NORTHING | EASTING | BENT LNTH | SKEW | GIRDER LNTH | CRS-SLP |
| BF Abut 1 | 167+63.8393 | -42.5000 | 9194.2800 | | -42.5000 | -14.6607 | 1622564.7985 | 2848460.9037 | -44.5476 | -17 26 21.56 | -1.3100 | -0.020000 |
| CL Abut 1 | 167+65.1493 | -42.5000 | 9194.2583 | 194.2583 | -42.5000 | -13.3507 | 1622566.0956 | 2848461.0872 | -44.5476 | -17 26 21.56 | 0.0000 | -0.020000 |
| F-1 | 167+73.1493 | -42.5000 | 9194.1226 | 194.1592 | -42.5000 | -5.3507 | 1622574.0167 | 2848462.2075 | | | 8.0000 | -0.020000 |
| F-2 | 167+81.1493 | -42.5000 | 9193.9804 | 194.0499 | -42.5000 | 2.6493 | 1622581.9379 | 2848463.3278 | | | 16.0000 | -0.020000 |
| F-3 | 167+89.1493 | -42.5000 | 9193.8318 | 193.9272 | -42.5000 | 10.6493 | 1622589.8591 | 2848464.4481 | | | 24.0000 | -0.020000 |
| F-4 | 167+97.1493 | -42.5000 | 9193.6768 | 193.7886 | -42.5000 | 18.6493 | 1622597.7802 | 2848465.5685 | | | 32.0000 | -0.020000 |
| F-5 | 168+05.1493 | -42.5000 | 9193.5153 | 193.6328 | -42.5000 | 26.6493 | 1622605.7014 | 2848466.6888 | | | 40.0000 | -0.020000 |
| F-6 | 168+13.1493 | -42.5000 | 9193.3475 | 193.4593 | -42.5000 | 34.6493 | 1622613.6226 | 2848467.8091 | | | 48.0000 | -0.020000 |
| F-7 | 168+21.1493 | -42.5000 | 9193.1731 | 193.2685 | -42.5000 | 42.6493 | 1622621.5437 | 2848468.9294 | | | 56.0000 | -0.020000 |
| F-8 | 168+29.1493 | -42.5000 | 9192.9924 | 193.0619 | -42.5000 | 50.6493 | 1622629.4649 | 2848470.0497 | | | 64.0000 | -0.020000 |
| F-9 | 168+37.1493 | -42.5000 | 9192.8052 | 192.8418 | -42.5000 | 58.6493 | 1622637.3861 | 2848471.1701 | | | 72.0000 | -0.020000 |
| CL Abut 2 | 168+45.1493 | -42.5000 | 9192.6116 | 192.6116 | -42.5000 | 66.6493 | 1622645.3072 | 2848472.2904 | -44.5476 | -17 26 21.56 | 80.0000 | -0.020000 |
| BF Abut 2 | 168+46.4593 | -42.5000 | 9192.5793 | | -42.5000 | 67.9593 | 1622646.6043 | 2848472.4738 | -44.5476 | -17 26 21.56 | 81.3100 | -0.020000 |
| LT Face of Barr | | | PARALLEL TO HORIZONTAL CONTROL | | | | | 0.250000 FEET BELOW FINISHED GRADE | | | | |
| BENT LINE | STATION | OFFSET | ELEVATION | ELEV+DL | X | Y | NORTHING | EASTING | BENT LNTH | SKEW | GIRDER LNTH | CRS-SLP |
| BF Abut 1 | 167+64.3105 | -41.0000 | 9194.3022 | | -41.0000 | -14.1895 | 1622565.0550 | 2848462.4549 | -42.9754 | -17 26 21.56 | -1.3100 | -0.020000 |
| CL Abut 1 | 167+65.6205 | -41.0000 | 9194.2805 | 194.2805 | -41.0000 | -12.8795 | 1622566.3521 | 2848462.6384 | -42.9754 | -17 26 21.56 | 0.0000 | -0.020000 |
| F-1 | 167+73.6205 | -41.0000 | 9194.1444 | 194.1810 | -41.0000 | -4.8795 | 1622574.2732 | 2848463.7587 | | | 8.0000 | -0.020000 |
| F-2 | 167+81.6205 | -41.0000 | 9194.0019 | 194.0713 | -41.0000 | 3.1205 | 1622582.1944 | 2848464.8790 | | | 16.0000 | -0.020000 |
| F-3 | 167+89.6205 | -41.0000 | 9193.8529 | 193.9482 | -41.0000 | 11.1205 | 1622590.1156 | 2848465.9993 | | | 24.0000 | -0.020000 |
| F-4 | 167+97.6205 | -41.0000 | 9193.6975 | 193.8093 | -41.0000 | 19.1205 | 1622598.0367 | 2848467.1197 | | | 32.0000 | -0.020000 |
| F-5 | 168+05.6205 | -41.0000 | 9193.5356 | 193.6531 | -41.0000 | 27.1205 | 1622605.9579 | 2848468.2400 | | | 40.0000 | -0.020000 |
| F-6 | 168+13.6205 | -41.0000 | 9193.3674 | 193.4792 | -41.0000 | 35.1205 | 1622613.8791 | 2848469.3603 | | | 48.0000 | -0.020000 |
| F-7 | 168+21.6205 | -41.0000 | 9193.1927 | 193.2880 | -41.0000 | 43.1205 | 1622621.8002 | 2848470.4806 | | | 56.0000 | -0.020000 |
| F-8 | 168+29.6205 | -41.0000 | 9193.0116 | 193.0810 | -41.0000 | 51.1205 | 1622629.7214 | 2848471.6009 | | | 64.0000 | -0.020000 |
| F-9 | 168+37.6205 | -41.0000 | 9192.8240 | 192.8606 | -41.0000 | 59.1205 | 1622637.6426 | 2848472.7213 | | | 72.0000 | -0.020000 |
| CL Abut 2 | 168+45.6205 | -41.0000 | 9192.6300 | 192.6300 | -41.0000 | 67.1205 | 1622645.5637 | 2848473.8416 | -42.9754 | -17 26 21.56 | 80.0000 | -0.020000 |
| BF Abut 2 | 168+46.9305 | -41.0000 | 9192.5976 | | -41.0000 | 68.4305 | 1622646.8608 | 2848474.0250 | -42.9754 | -17 26 21.56 | 81.3100 | -0.020000 |
| G1 | | | PARALLEL TO HORIZONTAL CONTROL | | | | | 0.250000 FEET BELOW FINISHED GRADE | | | | |
| BENT LINE | STATION | OFFSET | ELEVATION | ELEV+DL | X | Y | NORTHING | EASTING | BENT LNTH | SKEW | GIRDER LNTH | CRS-SLP |
| BF Abut 1 | 167+65.2529 | -38.0000 | 9194.3466 | | -38.0000 | -13.2471 | 1622565.5680 | 2848465.5573 | -39.8308 | -17 26 21.56 | -1.3100 | -0.020000 |
| CL Abut 1 | 167+66.5629 | -38.0000 | 9194.3248 | 194.3248 | -38.0000 | -11.9371 | 1622566.8651 | 2848465.7408 | -39.8308 | -17 26 21.56 | 0.0000 | -0.020000 |
| F-1 | 167+74.5629 | -38.0000 | 9194.1879 | 194.2245 | -38.0000 | -3.9371 | 1622574.7862 | 2848466.8611 | | | 8.0000 | -0.020000 |
| F-2 | 167+82.5629 | -38.0000 | 9194.0446 | 194.1141 | -38.0000 | 4.0629 | 1622582.7074 | 2848467.9814 | | | 16.0000 | -0.020000 |
| F-3 | 167+90.5629 | -38.0000 | 9193.8949 | 193.9902 | -38.0000 | 12.0629 | 1622590.6286 | 2848469.1017 | | | 24.0000 | -0.020000 |
| F-4 | 167+98.5629 | -38.0000 | 9193.7387 | 193.8505 | -38.0000 | 20.0629 | 1622598.5497 | 2848470.2221 | | | 32.0000 | -0.020000 |
| F-5 | 168+06.5629 | -38.0000 | 9193.5761 | 193.6936 | -38.0000 | 28.0629 | 1622606.4709 | 2848471.3424 | | | 40.0000 | -0.020000 |
| F-6 | 168+14.5629 | -38.0000 | 9193.4071 | 193.5189 | -38.0000 | 36.0629 | 1622614.3921 | 2848472.4627 | | | 48.0000 | -0.020000 |
| F-7 | 168+22.5629 | -38.0000 | 9193.2317 | 193.3270 | -38.0000 | 44.0629 | 1622622.3132 | 2848473.5830 | | | 56.0000 | -0.020000 |
| F-8 | 168+30.5629 | -38.0000 | 9193.0498 | 193.1192 | -38.0000 | 52.0629 | 1622630.2344 | 2848474.7033 | | | 64.0000 | -0.020000 |
| F-9 | 168+38.5629 | -38.0000 | 9192.8615 | 192.8981 | -38.0000 | 60.0629 | 1622638.1556 | 2848475.8237 | | | 72.0000 | -0.020000 |
| CL Abut 2 | 168+46.5629 | -38.0000 | 9192.6668 | 192.6668 | -38.0000 | 68.0629 | 1622646.0767 | 2848476.9440 | -39.8308 | -17 26 21.56 | 80.0000 | -0.020000 |
| BF Abut 2 | 168+47.8729 | -38.0000 | 9192.6343 | | -38.0000 | 69.3729 | 1622647.3738 | 2848477.1274 | -39.8308 | -17 26 21.56 | 81.3100 | -0.020000 |

NOTE: ELEVATION ARE AT TOP OF CONCRETE DECK 0.25 FEET BELOW FINISHED GRADE.

POSITIVE ROADWAY CROSS SLOPES IS UPWARDS FROM THE PROFILE GRADE LINE.

THESE STATIONS, COORDINATES, OFFSETS, AND LENGTHS DEFINE THE LAYOUT OF THE STRUCTURE IN A TWO DIMENSIONAL HORIZONTAL PLANE. ELEVATIONS DEFINE THE FINAL GRADE OF THE FINISHED CONCRETE. FABRICATION OF STRUCTURAL COMPONENTS THRU THE DIRECT USE OF THIS INFORMATION IS NOT INTENDED OR ADVISABLE.

| Design | | INITIAL | DATE | Detail | | INITIAL | DATE | Quantities | | INITIAL | DATE |
|---|---|---|---|---|---|---|---|---|---|---|---|
| | Designed By | PPC | 09/07 | | Detailed By | JSV | 10/07 | | Quantities By | JSV | 11/07 |
| | Checked By | MCY | 09/07 | | Checked By | PPC | 11/07 | | Checked By | PPC | 11/07 |

Print Date 8/25/2008
File Name: 23 Bridge Deck Elevations1.dgn
Horiz. Scale 1:12 Vert. Scale: 1:1
Staff Bridge Branch - Unit 0221 STW

| Sheet Revisions | | |
|---|---|---|
| Date: | Comments | Init. |
| | | |
| | | |
| | | |
| | | |


Colorado Department of Transportation
4201 East Arkansas Avenue
Room 107
Denver, CO 80222
Phone: 303-512-4072 FAX: 303-757-9197
Staff Bridge Branch STW


As Constructed
No Revisions:
Revised:
Void:

BRIDGE DECK ELEVATIONS
(SHEET 1 OF 3)

Designer: P. Chomsrimake
Detailer: C. Lenway
Sheet Subset: Bridge
Structure Numbers F-12-BW
Subset Sheets: B23 of 25

Project No./Code
STA 0091-035
16439
Sheet Number 86

G2 PARALLEL TO HORIZONTAL CONTROL 0.250000 FEET BELOW FINISHED GRADE

| BENT LINE | STATION | OFFSET | ELEVATION | ELEV+DL | X | Y | NORTHING | EASTING | BENT LNTH | SKEW | GIRDER LNTH | CRS-SLP |
|---|---|---|---|---|---|---|---|---|---|---|---|---|
| BF Abut 1 | 167+68.5513 | -27.5000 | 9194.5914 | | -27.5000 | -9.9487 | 1622567.3634 | 2848476.4158 | -28.8249 | -17 26 21.56 | -1.3100 | -0.020000 |
| CL Abut 1 | 167+69.8613 | -27.5000 | 9194.4792 | 194.4792 | -27.5000 | -8.6387 | 1622568.6605 | 2848476.5992 | -28.8249 | -17 26 21.56 | 0.0000 | -0.020000 |
| F-1 | 167+77.8613 | -27.5000 | 9194.3396 | 194.3783 | -27.5000 | -0.6387 | 1622576.5817 | 2848477.7195 | | | 8.0000 | -0.020000 |
| F-2 | 167+85.8613 | -27.5000 | 9194.1937 | 194.2672 | -27.5000 | 7.3613 | 1622584.5029 | 2848478.8399 | | | 16.0000 | -0.020000 |
| F-3 | 167+93.8613 | -27.5000 | 9194.0413 | 194.1422 | -27.5000 | 15.3613 | 1622592.4240 | 2848479.9602 | | | 24.0000 | -0.020000 |
| F-4 | 168+01.8613 | -27.5000 | 9193.8825 | 194.0008 | -27.5000 | 23.3613 | 1622600.3452 | 2848481.0805 | | | 32.0000 | -0.020000 |
| F-5 | 168+09.8613 | -27.5000 | 9193.7172 | 193.8416 | -27.5000 | 31.3613 | 1622608.2664 | 2848482.2008 | | | 40.0000 | -0.020000 |
| F-6 | 168+17.8613 | -27.5000 | 9193.5456 | 193.6639 | -27.5000 | 39.3613 | 1622616.1875 | 2848483.3211 | | | 48.0000 | -0.020000 |
| F-7 | 168+25.8613 | -27.5000 | 9193.3675 | 193.4684 | -27.5000 | 47.3613 | 1622624.1087 | 2848484.4415 | | | 56.0000 | -0.020000 |
| F-8 | 168+33.8613 | -27.5000 | 9193.1829 | 193.2564 | -27.5000 | 55.3613 | 1622632.0299 | 2848485.5618 | | | 64.0000 | -0.020000 |
| F-9 | 168+41.8613 | -27.5000 | 9192.9920 | 193.0306 | -27.5000 | 63.3613 | 1622639.9510 | 2848486.6821 | | | 72.0000 | -0.020000 |
| CL Abut 2 | 168+49.8613 | -27.5000 | 9192.7946 | 192.7946 | -27.5000 | 71.3613 | 1622647.8722 | 2848487.8024 | -28.8249 | -17 26 21.56 | 80.0000 | -0.020000 |
| BF Abut 2 | 168+51.1713 | -27.5000 | 9192.7617 | | -27.5000 | 72.6713 | 1622649.1693 | 2848487.9859 | -28.8249 | -17 26 21.56 | 81.3100 | -0.020000 |

G3 PARALLEL TO HORIZONTAL CONTROL 0.250000 FEET BELOW FINISHED GRADE

| BENT LINE | STATION | OFFSET | ELEVATION | ELEV+DL | X | Y | NORTHING | EASTING | BENT LNTH | SKEW | GIRDER LNTH | CRS-SLP |
|---|---|---|---|---|---|---|---|---|---|---|---|---|
| BF Abut 1 | 167+71.8497 | -17.0000 | 9194.6551 | | -17.0000 | -6.6503 | 1622569.1589 | 2848487.2742 | -17.8191 | -17 26 21.56 | -1.3100 | -0.020000 |
| CL Abut 1 | 167+73.1597 | -17.0000 | 9194.6324 | 194.6324 | -17.0000 | -5.3403 | 1622570.4560 | 2848487.4577 | -17.8191 | -17 26 21.56 | 0.0000 | -0.020000 |
| F-1 | 167+81.1597 | -17.0000 | 9194.4902 | 194.5289 | -17.0000 | 2.6597 | 1622578.3772 | 2848488.5780 | | | 8.0000 | -0.020000 |
| F-2 | 167+89.1597 | -17.0000 | 9194.3416 | 194.4151 | -17.0000 | 10.6597 | 1622586.2983 | 2848489.6983 | | | 16.0000 | -0.020000 |
| F-3 | 167+97.1597 | -17.0000 | 9194.1866 | 194.2875 | -17.0000 | 18.6597 | 1622594.2195 | 2848490.8186 | | | 24.0000 | -0.020000 |
| F-4 | 168+05.1597 | -17.0000 | 9194.0251 | 194.1435 | -17.0000 | 26.6597 | 1622602.1407 | 2848491.9389 | | | 32.0000 | -0.020000 |
| F-5 | 168+13.1597 | -17.0000 | 9193.8572 | 193.9816 | -17.0000 | 34.6597 | 1622610.0618 | 2848493.0593 | | | 40.0000 | -0.020000 |
| F-6 | 168+21.1597 | -17.0000 | 9193.6829 | 193.8013 | -17.0000 | 42.6597 | 1622617.9830 | 2848494.1796 | | | 48.0000 | -0.020000 |
| F-7 | 168+29.1597 | -17.0000 | 9193.5022 | 193.6031 | -17.0000 | 50.6597 | 1622625.9042 | 2848495.2999 | | | 56.0000 | -0.020000 |
| F-8 | 168+37.1597 | -17.0000 | 9193.3150 | 193.3885 | -17.0000 | 58.6597 | 1622633.8253 | 2848496.4202 | | | 64.0000 | -0.020000 |
| F-9 | 168+45.1597 | -17.0000 | 9193.1214 | 193.1600 | -17.0000 | 66.6597 | 1622641.7465 | 2848497.5405 | | | 72.0000 | -0.020000 |
| CL Abut 2 | 168+53.1597 | -17.0000 | 9192.9213 | 192.9213 | -17.0000 | 74.6597 | 1622649.6677 | 2848498.6609 | -17.8191 | -17 26 21.56 | 80.0000 | -0.020000 |
| BF Abut 2 | 168+54.4697 | -17.0000 | 9192.8880 | | -17.0000 | 75.9697 | 1622650.9648 | 2848498.8443 | -17.8191 | -17 26 21.56 | 81.3100 | -0.020000 |

G4 PARALLEL TO HORIZONTAL CONTROL 0.250000 FEET BELOW FINISHED GRADE

| BENT LINE | STATION | OFFSET | ELEVATION | ELEV+DL | X | Y | NORTHING | EASTING | BENT LNTH | SKEW | GIRDER LNTH | CRS-SLP |
|---|---|---|---|---|---|---|---|---|---|---|---|---|
| BF Abut 1 | 167+75.1481 | -6.5000 | 9194.8077 | | -6.5000 | -3.3519 | 1622570.9544 | 2848498.1327 | -6.8132 | -17 26 21.56 | -1.3100 | -0.020000 |
| CL Abut 1 | 167+76.4581 | -6.5000 | 9194.7846 | 194.7846 | -6.5000 | -2.0419 | 1622572.2515 | 2848498.3161 | -6.8132 | -17 26 21.56 | 0.0000 | -0.020000 |
| F-1 | 167+84.4581 | -6.5000 | 9194.6397 | 194.6784 | -6.5000 | 5.9581 | 1622580.1726 | 2848499.4364 | | | 8.0000 | -0.020000 |
| F-2 | 167+92.4581 | -6.5000 | 9194.4885 | 194.5620 | -6.5000 | 13.9581 | 1622588.0938 | 2848500.5567 | | | 16.0000 | -0.020000 |
| F-3 | 168+00.4581 | -6.5000 | 9194.3308 | 194.4317 | -6.5000 | 21.9581 | 1622596.0150 | 2848501.6771 | | | 24.0000 | -0.020000 |
| F-4 | 168+08.4581 | -6.5000 | 9194.1667 | 194.2851 | -6.5000 | 29.9581 | 1622603.9361 | 2848502.7974 | | | 32.0000 | -0.020000 |
| F-5 | 168+16.4581 | -6.5000 | 9193.9961 | 194.1205 | -6.5000 | 37.9581 | 1622611.8573 | 2848503.9177 | | | 40.0000 | -0.020000 |
| F-6 | 168+24.4581 | -6.5000 | 9193.8192 | 193.9375 | -6.5000 | 45.9581 | 1622619.7785 | 2848505.0380 | | | 48.0000 | -0.020000 |
| F-7 | 168+32.4581 | -6.5000 | 9193.6358 | 193.7367 | -6.5000 | 53.9581 | 1622627.6996 | 2848506.1583 | | | 56.0000 | -0.020000 |
| F-8 | 168+40.4581 | -6.5000 | 9193.4459 | 193.5194 | -6.5000 | 61.9581 | 1622635.6208 | 2848507.2787 | | | 64.0000 | -0.020000 |
| F-9 | 168+48.4581 | -6.5000 | 9193.2497 | 193.2883 | -6.5000 | 69.9581 | 1622643.5420 | 2848508.3990 | | | 72.0000 | -0.020000 |
| CL Abut 2 | 168+56.4581 | -6.5000 | 9193.0470 | 193.0470 | -6.5000 | 77.9581 | 1622651.4631 | 2848509.5193 | -6.8132 | -17 26 21.56 | 80.0000 | -0.020000 |
| BF Abut 2 | 168+57.7681 | -6.5000 | 9193.0132 | | -6.5000 | 79.2681 | 1622652.7602 | 2848509.7028 | -6.8132 | -17 26 21.56 | 81.3100 | -0.020000 |

HCL PARALLEL TO HORIZONTAL CONTROL 0.250000 FEET BELOW FINISHED GRADE

| BENT LINE | STATION | OFFSET | ELEVATION | ELEV+DL | X | Y | NORTHING | EASTING | BENT LNTH | SKEW | GIRDER LNTH | CRS-SLP |
|---|---|---|---|---|---|---|---|---|---|---|---|---|
| BF Abut 1 | 167+77.1900 | 0.0000 | 9194.9016 | | 0.0000 | -1.3100 | 1622572.0659 | 2848504.8545 | 0.0000 | -17 26 21.56 | -1.3100 | |
| CL Abut 1 | 167+78.5000 | 0.0000 | 9194.8782 | 194.8782 | 0.0000 | 0.0000 | 1622573.3630 | 2848505.0380 | 0.0000 | -17 26 21.56 | 0.0000 | |
| F-1 | 167+86.5000 | 0.0000 | 9194.7317 | 194.7704 | 0.0000 | 8.0000 | 1622581.2842 | 2848506.1583 | | | 8.0000 | |
| F-2 | 167+94.5000 | 0.0000 | 9194.5788 | 194.6523 | 0.0000 | 16.0000 | 1622589.2053 | 2848507.2786 | | | 16.0000 | |
| F-3 | 168+02.5000 | 0.0000 | 9194.4195 | 194.5204 | 0.0000 | 24.0000 | 1622597.1265 | 2848508.3990 | | | 24.0000 | |
| F-4 | 168+10.5000 | 0.0000 | 9194.2538 | 194.3721 | 0.0000 | 32.0000 | 1622605.0477 | 2848509.5193 | | | 32.0000 | |
| F-5 | 168+18.5000 | 0.0000 | 9194.0816 | 194.2059 | 0.0000 | 40.0000 | 1622612.9688 | 2848510.6396 | | | 40.0000 | |
| F-6 | 168+26.5000 | 0.0000 | 9193.9030 | 194.0213 | 0.0000 | 48.0000 | 1622620.8900 | 2848511.7599 | | | 48.0000 | |
| F-7 | 168+34.5000 | 0.0000 | 9193.7179 | 193.8188 | 0.0000 | 56.0000 | 1622628.8112 | 2848512.8802 | | | 56.0000 | |
| F-8 | 168+42.5000 | 0.0000 | 9193.5265 | 193.5999 | 0.0000 | 64.0000 | 1622636.7323 | 2848514.0006 | | | 64.0000 | |
| F-9 | 168+50.5000 | 0.0000 | 9193.3286 | 193.3672 | 0.0000 | 72.0000 | 1622644.6535 | 2848515.1209 | | | 72.0000 | |
| CL Abut 2 | 168+58.5000 | 0.0000 | 9193.1242 | 193.1242 | 0.0000 | 80.0000 | 1622652.5747 | 2848516.2412 | 0.0000 | -17 26 21.56 | 80.0000 | |
| BF Abut 2 | 168+59.8100 | 0.0000 | 9193.0902 | | 0.0000 | 81.3100 | 1622653.8718 | 2848516.4247 | 0.0000 | -17 26 21.56 | 81.3100 | |

G5 PARALLEL TO HORIZONTAL CONTROL 0.250000 FEET BELOW FINISHED GRADE

| BENT LINE | STATION | OFFSET | ELEVATION | ELEV+DL | X | Y | NORTHING | EASTING | BENT LNTH | SKEW | GIRDER LNTH | CRS-SLP |
|---|---|---|---|---|---|---|---|---|---|---|---|---|
| BF Abut 1 | 167+78.4465 | 4.0000 | 9194.7992 | | 4.0000 | -0.0535 | 1622572.7499 | 2848508.9911 | 4.1927 | -17 26 21.56 | -1.3100 | -0.020000 |
| CL Abut 1 | 167+79.7565 | 4.0000 | 9194.7756 | 194.7756 | 4.0000 | 1.2565 | 1622574.0470 | 2848509.1745 | 4.1927 | -17 26 21.56 | 0.0000 | -0.020000 |
| F-1 | 167+87.7565 | 4.0000 | 9194.6282 | 194.6668 | 4.0000 | 9.2565 | 1622581.9681 | 2848510.2949 | | | 8.0000 | -0.020000 |
| F-2 | 167+95.7565 | 4.0000 | 9194.4742 | 194.5477 | 4.0000 | 17.2565 | 1622589.8893 | 2848511.4152 | | | 16.0000 | -0.020000 |
| F-3 | 168+03.7565 | 4.0000 | 9194.3139 | 194.4148 | 4.0000 | 25.2565 | 1622597.8105 | 2848512.5355 | | | 24.0000 | -0.020000 |
| F-4 | 168+11.7565 | 4.0000 | 9194.1471 | 194.2655 | 4.0000 | 33.2565 | 1622605.7316 | 2848513.6558 | | | 32.0000 | -0.020000 |
| F-5 | 168+19.7565 | 4.0000 | 9193.9739 | 194.0983 | 4.0000 | 41.2565 | 1622613.6528 | 2848514.7761 | | | 40.0000 | -0.020000 |
| F-6 | 168+27.7565 | 4.0000 | 9193.7943 | 193.9127 | 4.0000 | 49.2565 | 1622621.5740 | 2848515.8965 | | | 48.0000 | -0.020000 |
| F-7 | 168+35.7565 | 4.0000 | 9193.6083 | 193.7092 | 4.0000 | 57.2565 | 1622629.4951 | 2848517.0168 | | | 56.0000 | -0.020000 |
| F-8 | 168+43.7565 | 4.0000 | 9193.4158 | 193.4893 | 4.0000 | 65.2565 | 1622637.4163 | 2848518.1371 | | | 64.0000 | -0.020000 |
| F-9 | 168+51.7565 | 4.0000 | 9193.2169 | 193.2556 | 4.0000 | 73.2565 | 1622645.3375 | 2848519.2574 | | | 72.0000 | -0.020000 |
| CL Abut 2 | 168+59.7565 | 4.0000 | 9193.0115 | 193.0115 | 4.0000 | 81.2565 | 1622653.2586 | 2848520.3777 | 4.1927 | -17 26 21.56 | 80.0000 | -0.020000 |
| BF Abut 2 | 168+61.0665 | 4.0000 | 9192.9773 | | 4.0000 | 82.5665 | 1622654.5557 | 2848520.5612 | 4.1927 | -17 26 21.56 | 81.3100 | -0.020000 |

ST2 Closure Pour-LT PARALLEL TO HORIZONTAL CONTROL 0.250000 FEET BELOW FINISHED GRADE

| BENT LINE | STATION | OFFSET | ELEVATION | ELEV+DL | X | Y | NORTHING | EASTING | BENT LNTH | SKEW | GIRDER LNTH | CRS-SLP |
|---|---|---|---|---|---|---|---|---|---|---|---|---|
| BF Abut 1 | 167+80.1743 | 9.5000 | 9194.6581 | | 9.5000 | 1.6743 | 1622573.6904 | 2848514.6789 | 9.9577 | -17 26 21.56 | -1.3100 | -0.020000 |
| CL Abut 1 | 167+81.4843 | 9.5000 | 9194.6343 | 194.6343 | 9.5000 | 2.9843 | 1622574.9875 | 2848514.8623 | 9.9577 | -17 26 21.56 | 0.0000 | -0.020000 |
| F-1 | 167+89.4843 | 9.5000 | 9194.4855 | 194.5241 | 9.5000 | 10.9843 | 1622582.9087 | 2848515.9826 | | | 8.0000 | -0.020000 |
| F-2 | 167+97.4843 | 9.5000 | 9194.3302 | 194.4037 | 9.5000 | 18.9843 | 1622590.8298 | 2848517.1029 | | | 16.0000 | -0.020000 |
| F-3 | 168+05.4843 | 9.5000 | 9194.1684 | 194.2693 | 9.5000 | 26.9843 | 1622598.7510 | 2848518.2233 | | | 24.0000 | -0.020000 |
| F-4 | 168+13.4843 | 9.5000 | 9194.0003 | 194.1187 | 9.5000 | 34.9843 | 1622606.6722 | 2848519.3436 | | | 32.0000 | -0.020000 |
| F-5 | 168+21.4843 | 9.5000 | 9193.8257 | 193.9501 | 9.5000 | 42.9843 | 1622614.5933 | 2848520.4639 | | | 40.0000 | -0.020000 |
| F-6 | 168+29.4843 | 9.5000 | 9193.6447 | 193.7631 | 9.5000 | 50.9843 | 1622622.5145 | 2848521.5842 | | | 48.0000 | -0.020000 |
| F-7 | 168+37.4843 | 9.5000 | 9193.4572 | 193.5582 | 9.5000 | 58.9843 | 1622630.4357 | 2848522.7045 | | | 56.0000 | -0.020000 |
| F-8 | 168+45.4843 | 9.5000 | 9193.2634 | 193.3369 | 9.5000 | 66.9843 | 1622638.3568 | 2848523.8249 | | | 64.0000 | -0.020000 |
| F-9 | 168+53.4843 | 9.5000 | 9193.0631 | 193.1018 | 9.5000 | 74.9843 | 1622646.2780 | 2848524.9452 | | | 72.0000 | -0.020000 |
| CL Abut 2 | 168+61.4843 | 9.5000 | 9192.8564 | 192.8564 | 9.5000 | 82.9843 | 1622654.1992 | 2848526.0655 | 9.9577 | -17 26 21.56 | 80.0000 | -0.020000 |
| BF Abut 2 | 168+62.7943 | 9.5000 | 9192.8219 | | 9.5000 | 84.2943 | 1622655.4963 | 2848526.2490 | 9.9577 | -17 26 21.56 | 81.3100 | -0.020000 |

ST1 Closure Pour -RT PARALLEL TO HORIZONTAL CONTROL 0.250000 FEET BELOW FINISHED GRADE

| BENT LINE | STATION | OFFSET | ELEVATION | ELEV+DL | X | Y | NORTHING | EASTING | BENT LNTH | SKEW | GIRDER LNTH | CRS-SLP |
|---|---|---|---|---|---|---|---|---|---|---|---|---|
| BF Abut 1 | 167+80.8026 | 11.5000 | 9194.6067 | | 11.5000 | 2.3026 | 1622574.0324 | 2848516.7471 | 12.0541 | -17 26 21.56 | -1.3100 | -0.020000 |
| CL Abut 1 | 167+82.1126 | 11.5000 | 9194.5829 | 194.5829 | 11.5000 | 3.6126 | 1622575.3295 | 2848516.9306 | 12.0541 | -17 26 21.56 | 0.0000 | -0.020000 |
| F-1 | 167+90.1126 | 11.5000 | 9194.4335 | 194.4722 | 11.5000 | 11.6126 | 1622583.2507 | 2848518.0509 | | | 8.0000 | -0.020000 |
| F-2 | 167+98.1126 | 11.5000 | 9194.2777 | 194.3512 | 11.5000 | 19.6126 | 1622591.1719 | 2848519.1712 | | | 16.0000 | -0.020000 |
| F-3 | 168+06.1126 | 11.5000 | 9194.1155 | 194.2164 | 11.5000 | 27.6126 | 1622599.0930 | 2848520.2915 | | | 24.0000 | -0.020000 |
| F-4 | 168+14.1126 | 11.5000 | 9193.9468 | 194.0652 | 11.5000 | 35.6126 | 1622607.0142 | 2848521.4119 | | | 32.0000 | -0.020000 |
| F-5 | 168+22.1126 | 11.5000 | 9193.7717 | 193.8961 | 11.5000 | 43.6126 | 1622614.9354 | 2848522.5322 | | | 40.0000 | -0.020000 |
| F-6 | 168+30.1126 | 11.5000 | 9193.5902 | 193.7086 | 11.5000 | 51.6126 | 1622622.8565 | 2848523.6525 | | | 48.0000 | -0.020000 |
| F-7 | 168+38.1126 | 11.5000 | 9193.4023 | 193.5032 | 11.5000 | 59.6126 | 1622630.7777 | 2848524.7728 | | | 56.0000 | -0.020000 |
| F-8 | 168+46.1126 | 11.5000 | 9193.2079 | 193.2814 | 11.5000 | 67.6126 | 1622638.6989 | 2848525.8931 | | | 64.0000 | -0.020000 |
| F-9 | 168+54.1126 | 11.5000 | 9193.0071 | 193.0458 | 11.5000 | 75.6126 | 1622646.6200 | 2848527.0135 | | | 72.0000 | -0.020000 |
| CL Abut 2 | 168+62.1126 | 11.5000 | 9192.7999 | 192.7999 | 11.5000 | 83.6126 | 1622654.5412 | 2848528.1338 | 12.0541 | -17 26 21.56 | 80.0000 | -0.020000 |
| BF Abut 2 | 168+63.4226 | 11.5000 | 9192.7653 | | 11.5000 | 84.9226 | 1622655.8383 | 2848528.3172 | 12.0541 | -17 26 21.56 | 81.3100 | -0.020000 |
| End WW4 | 168+92.4476 | 11.5000 | 9191.9557 | | 11.5000 | 113.9476 | 1622684.5773 | 2848532.3819 | 12.0541 | -17 26 21.56 | 110.3350 | -0.020000 |

G6 PARALLEL TO HORIZONTAL CONTROL 0.250000 FEET BELOW FINISHED GRADE

| BENT LINE | STATION | OFFSET | ELEVATION | ELEV+DL | X | Y | NORTHING | EASTING | BENT LNTH | SKEW | GIRDER LNTH | CRS-SLP |
|---|---|---|---|---|---|---|---|---|---|---|---|---|
| BF Abut 1 | 167+81.7450 | 14.5000 | 9194.5296 | | 14.5000 | 3.2450 | 1622574.5454 | 2848519.8495 | 15.1986 | -17 26 21.56 | -1.3100 | -0.020000 |
| CL Abut 1 | 167+83.0550 | 14.5000 | 9194.5056 | 194.5056 | 14.5000 | 4.5550 | 1622575.8425 | 2848520.0330 | 15.1986 | -17 26 21.56 | 0.0000 | -0.020000 |
| F-1 | 167+91.0550 | 14.5000 | 9194.3555 | 194.3941 | 14.5000 | 12.5550 | 1622583.7637 | 2848521.1533 | | | 8.0000 | -0.020000 |
| F-2 | 167+99.0550 | 14.5000 | 9194.1989 | 194.2724 | 14.5000 | 20.5550 | 1622591.6849 | 2848522.2736 | | | 16.0000 | -0.020000 |
| F-3 | 168+07.0550 | 14.5000 | 9194.0359 | 194.1368 | 14.5000 | 28.5550 | 1622599.6060 | 2848523.3940 | | | 24.0000 | -0.020000 |
| F-4 | 168+15.0550 | 14.5000 | 9193.8665 | 193.9849 | 14.5000 | 36.5550 | 1622607.5272 | 2848524.5143 | | | 32.0000 | -0.020000 |
| F-5 | 168+23.0550 | 14.5000 | 9193.6907 | 193.8150 | 14.5000 | 44.5550 | 1622615.4484 | 2848525.6346 | | | 40.0000 | -0.020000 |
| F-6 | 168+31.0550 | 14.5000 | 9193.5084 | 193.6268 | 14.5000 | 52.5550 | 1622623.3695 | 2848526.7549 | | | 48.0000 | -0.020000 |
| F-7 | 168+39.0550 | 14.5000 | 9193.3197 | 193.4206 | 14.5000 | 60.5550 | 1622631.2907 | 2848527.8752 | | | 56.0000 | -0.020000 |
| F-8 | 168+47.0550 | 14.5000 | 9193.1246 | 193.1981 | 14.5000 | 68.5550 | 1622639.2119 | 2848528.9956 | | | 64.0000 | -0.020000 |
| F-9 | 168+55.0550 | 14.5000 | 9192.9230 | 192.9617 | 14.5000 | 76.5550 | 1622647.1330 | 2848530.1159 | | | 72.0000 | -0.020000 |
| CL Abut 2 | 168+63.0550 | 14.5000 | 9192.7150 | 192.7150 | 14.5000 | 84.5550 | 1622655.0542 | 2848531.2362 | 15.1986 | -17 26 21.56 | 80.0000 | -0.020000 |
| BF Abut 2 | 168+64.3650 | 14.5000 | 9192.6803 | | 14.5000 | 85.8650 | 1622656.3513 | 2848531.4197 | 15.1986 | -17 26 21.56 | 81.3100 | -0.020000 |

NOTE: ELEVATION ARE AT TOP OF CONCRETE DECK 0.25 FEET BELOW FINISHED GRADE.

POSITIVE ROADWAY CROSS SLOPES IS UPWARDS FROM THE PROFILE GRADE LINE.

THESE STATIONS, COORDINATES, OFFSETS, AND LENGTHS DEFINE THE LAYOUT OF THE STRUCTURE IN A TWO DIMENSIONAL HORIZONTAL PLANE. ELEVATIONS DEFINE THE FINAL GRADE OF THE FINISHED CONCRETE. FABRICATION OF STRUCTURAL COMPONENTS THRU THE DIRECT USE OF THIS INFORMATION IS NOT INTENDED OR ADVISABLE.

| Design | | | Detail | | | Quantities | | |
|---|---|---|---|---|---|---|---|---|
| | INITIAL | DATE | | INITIAL | DATE | | INITIAL | DATE |
| Designed By | PPC | 09/07 | Detailed By | JSV | 10/07 | Quantities By | JSV | 11/07 |
| Checked By | MCY | 09/07 | Checked By | PPC | 11/07 | Checked By | PPC | 11/07 |

Print Date: 8/25/2008
File Name: 24 Bridge Deck Elevations2.dgn
Horiz. Scale: 1:12 Vert. Scale: 1:1
Staff Bridge Branch - Unit 0221 STW

| Sheet Revisions | | |
|---|---|---|
| Date: | Comments | Init. |
| | | |
| | | |
| | | |
| | | |

Colorado Department of Transportation
4201 East Arkansas Avenue
Room 107
Denver, CO 80222
Phone: 303-512-4072 FAX: 303-757-9197
Staff Bridge Branch STW

As Constructed
No Revisions:
Revised:
Void:

BRIDGE DECK ELEVATIONS (SHEET 2 OF3)

Designer: P. Chomsrimake
Detailer: C. Lenway
Sheet Subset: Bridge
Structure Numbers F-12-BW
Subset Sheets: B24 of 25

Project No./Code
STA 0091-035
16439
Sheet Number 87

G7 PARALLEL TO HORIZONTAL CONTROL 0.250000 FEET BELOW FINISHED GRADE

| BENT LINE | STATION | OFFSET | ELEVATION | ELEV+DL | X | Y | NORTHING | EASTING | BENT LNTH | SKEW | GIRDER LNTH | CRS-SLP |
|---|---|---|---|---|---|---|---|---|---|---|---|---|
| BF Abut 1 | 167+85.0434 | 25.0000 | 9194.2589 | | 25.0000 | 6.5434 | 1622576.3409 | 2848530.7080 | 26.2045 | -17 26 21.56 | -1.3100 | -0.020000 |
| CL Abut 1 | 167+86.3534 | 25.0000 | 9194.2345 | 194.2345 | 25.0000 | 7.8534 | 1622577.6380 | 2848530.8914 | 26.2045 | -17 26 21.56 | 0.0000 | -0.020000 |
| F-1 | 167+94.3534 | 25.0000 | 9194.0817 | 194.1204 | 25.0000 | 15.8534 | 1622585.5592 | 2848532.0118 | | | 8.0000 | -0.020000 |
| F-2 | 168+02.3534 | 25.0000 | 9193.9225 | 193.9960 | 25.0000 | 23.8534 | 1622593.4803 | 2848533.1321 | | | 16.0000 | -0.020000 |
| F-3 | 168+10.3534 | 25.0000 | 9193.7569 | 193.8578 | 25.0000 | 31.8534 | 1622601.4015 | 2848534.2524 | | | 24.0000 | -0.020000 |
| F-4 | 168+18.3534 | 25.0000 | 9193.5848 | 193.7032 | 25.0000 | 39.8534 | 1622609.3227 | 2848535.3727 | | | 32.0000 | -0.020000 |
| F-5 | 168+26.3534 | 25.0000 | 9193.4063 | 193.5307 | 25.0000 | 47.8534 | 1622617.2438 | 2848536.4930 | | | 40.0000 | -0.020000 |
| F-6 | 168+34.3534 | 25.0000 | 9193.2214 | 193.3397 | 25.0000 | 55.8534 | 1622625.1650 | 2848537.6134 | | | 48.0000 | -0.020000 |
| F-7 | 168+42.3534 | 25.0000 | 9193.0300 | 193.1309 | 25.0000 | 63.8534 | 1622633.0862 | 2848538.7337 | | | 56.0000 | -0.020000 |
| F-8 | 168+50.3534 | 25.0000 | 9192.8322 | 192.9057 | 25.0000 | 71.8534 | 1622641.0073 | 2848539.8540 | | | 64.0000 | -0.020000 |
| F-9 | 168+58.3534 | 25.0000 | 9192.6280 | 192.6667 | 25.0000 | 79.8534 | 1622648.9285 | 2848540.9743 | | | 72.0000 | -0.020000 |
| CL Abut 2 | 168+66.3534 | 25.0000 | 9192.4174 | 192.4174 | 25.0000 | 87.8534 | 1622656.8497 | 2848542.0946 | 26.2045 | -17 26 21.56 | 80.0000 | -0.020000 |
| BF Abut 2 | 168+67.6634 | 25.0000 | 9192.3823 | | 25.0000 | 89.1634 | 1622658.1468 | 2848542.2781 | 26.2045 | -17 26 21.56 | 81.3100 | -0.020000 |

G8 PARALLEL TO HORIZONTAL CONTROL 0.250000 FEET BELOW FINISHED GRADE

| BENT LINE | STATION | OFFSET | ELEVATION | ELEV+DL | X | Y | NORTHING | EASTING | BENT LNTH | SKEW | GIRDER LNTH | CRS-SLP |
|---|---|---|---|---|---|---|---|---|---|---|---|---|
| BF Abut 1 | 167+88.3418 | 35.5000 | 9193.9871 | | 35.5000 | 9.8418 | 1622578.1364 | 2848541.5664 | 37.2104 | -17 26 21.56 | -1.3100 | -0.020000 |
| CL Abut 1 | 167+89.6518 | 35.5000 | 9193.9623 | 193.9623 | 35.5000 | 11.1518 | 1622579.4335 | 2848541.7499 | 37.2104 | -17 26 21.56 | 0.0000 | -0.020000 |
| F-1 | 167+97.6518 | 35.5000 | 9193.8068 | 193.8455 | 35.5000 | 19.1518 | 1622587.3547 | 2848542.8702 | | | 8.0000 | -0.020000 |
| F-2 | 168+05.6518 | 35.5000 | 9193.6450 | 193.7185 | 35.5000 | 27.1518 | 1622595.2758 | 2848543.9905 | | | 16.0000 | -0.020000 |
| F-3 | 168+13.6518 | 35.5000 | 9193.4767 | 193.5776 | 35.5000 | 35.1518 | 1622603.1970 | 2848545.1108 | | | 24.0000 | -0.020000 |
| F-4 | 168+21.6518 | 35.5000 | 9193.3020 | 193.4203 | 35.5000 | 43.1518 | 1622611.1182 | 2848546.2312 | | | 32.0000 | -0.020000 |
| F-5 | 168+29.6518 | 35.5000 | 9193.1208 | 193.2452 | 35.5000 | 51.1518 | 1622619.0393 | 2848547.3515 | | | 40.0000 | -0.020000 |
| F-6 | 168+37.6518 | 35.5000 | 9192.9333 | 193.0516 | 35.5000 | 59.1518 | 1622626.9605 | 2848548.4718 | | | 48.0000 | -0.020000 |
| F-7 | 168+45.6518 | 35.5000 | 9192.7393 | 192.8402 | 35.5000 | 67.1518 | 1622634.8817 | 2848549.5921 | | | 56.0000 | -0.020000 |
| F-8 | 168+53.6518 | 35.5000 | 9192.5388 | 192.6123 | 35.5000 | 75.1518 | 1622642.8028 | 2848550.7124 | | | 64.0000 | -0.020000 |
| F-9 | 168+61.6518 | 35.5000 | 9192.3320 | 192.3706 | 35.5000 | 83.1518 | 1622650.7240 | 2848551.8328 | | | 72.0000 | -0.020000 |
| CL Abut 2 | 168+69.6518 | 35.5000 | 9192.1187 | 192.1187 | 35.5000 | 91.1518 | 1622658.6452 | 2848552.9531 | 37.2104 | -17 26 21.56 | 80.0000 | -0.020000 |
| BF Abut 2 | 168+70.9618 | 35.5000 | 9192.0831 | | 35.5000 | 92.4618 | 1622659.9422 | 2848553.1365 | 37.2104 | -17 26 21.56 | 81.3100 | -0.020000 |

G9 PARALLEL TO HORIZONTAL CONTROL 0.250000 FEET BELOW FINISHED GRADE

| BENT LINE | STATION | OFFSET | ELEVATION | ELEV+DL | X | Y | NORTHING | EASTING | BENT LNTH | SKEW | GIRDER LNTH | CRS-SLP |
|---|---|---|---|---|---|---|---|---|---|---|---|---|
| BF Abut 1 | 167+91.6402 | 46.0000 | 9193.7142 | | 46.0000 | 13.1402 | 1622579.9319 | 2848552.4249 | 48.2163 | -17 26 21.56 | -1.3100 | -0.020000 |
| CL Abut 1 | 167+92.9502 | 46.0000 | 9193.6890 | 193.6890 | 46.0000 | 14.4502 | 1622581.2290 | 2848552.6083 | 48.2163 | -17 26 21.56 | 0.0000 | -0.020000 |
| F-1 | 168+00.9502 | 46.0000 | 9193.5309 | 193.5675 | 46.0000 | 22.4502 | 1622589.1501 | 2848553.7286 | | | 8.0000 | -0.020000 |
| F-2 | 168+08.9502 | 46.0000 | 9193.3664 | 193.4358 | 46.0000 | 30.4502 | 1622597.0713 | 2848554.8490 | | | 16.0000 | -0.020000 |
| F-3 | 168+16.9502 | 46.0000 | 9193.1954 | 193.2908 | 46.0000 | 38.4502 | 1622604.9925 | 2848555.9693 | | | 24.0000 | -0.020000 |
| F-4 | 168+24.9502 | 46.0000 | 9193.0181 | 193.1299 | 46.0000 | 46.4502 | 1622612.9136 | 2848557.0896 | | | 32.0000 | -0.020000 |
| F-5 | 168+32.9502 | 46.0000 | 9192.8343 | 192.9517 | 46.0000 | 54.4502 | 1622620.8348 | 2848558.2099 | | | 40.0000 | -0.020000 |
| F-6 | 168+40.9502 | 46.0000 | 9192.6440 | 192.7559 | 46.0000 | 62.4502 | 1622628.7560 | 2848559.3302 | | | 48.0000 | -0.020000 |
| F-7 | 168+48.9502 | 46.0000 | 9192.4474 | 192.5427 | 46.0000 | 70.4502 | 1622636.6771 | 2848560.4506 | | | 56.0000 | -0.020000 |
| F-8 | 168+56.9502 | 46.0000 | 9192.2443 | 192.3138 | 46.0000 | 78.4502 | 1622644.5983 | 2848561.5709 | | | 64.0000 | -0.020000 |
| F-9 | 168+64.9502 | 46.0000 | 9192.0348 | 192.0714 | 46.0000 | 86.4502 | 1622652.5195 | 2848562.6912 | | | 72.0000 | -0.020000 |
| CL Abut 2 | 168+72.9502 | 46.0000 | 9191.8189 | 191.8189 | 46.0000 | 94.4502 | 1622660.4406 | 2848563.8115 | 48.2163 | -17 26 21.56 | 80.0000 | -0.020000 |
| BF Abut 2 | 168+74.2602 | 46.0000 | 9191.7829 | | 46.0000 | 95.7602 | 1622661.7377 | 2848563.9950 | 48.2163 | -17 26 21.56 | 81.3100 | -0.020000 |

RT Face of Barr PARALLEL TO HORIZONTAL CONTROL 0.250000 FEET BELOW FINISHED GRADE

| BENT LINE | STATION | OFFSET | ELEVATION | ELEV+DL | X | Y | NORTHING | EASTING | BENT LNTH | SKEW | GIRDER LNTH | CRS-SLP |
|---|---|---|---|---|---|---|---|---|---|---|---|---|
| BF Abut 1 | 167+92.5826 | 49.0000 | 9193.6361 | | 49.0000 | 14.0826 | 1622580.4449 | 2848555.5273 | 51.3608 | -17 26 21.56 | -1.3100 | -0.020000 |
| CL Abut 1 | 167+93.8926 | 49.0000 | 9193.6107 | 193.6107 | 49.0000 | 15.3926 | 1622581.7420 | 2848555.7107 | 51.3608 | -17 26 21.56 | 0.0000 | -0.020000 |
| F-1 | 168+01.8926 | 49.0000 | 9193.4518 | 193.4884 | 49.0000 | 23.3926 | 1622589.6631 | 2848556.8310 | | | 8.0000 | -0.020000 |
| F-2 | 168+09.8926 | 49.0000 | 9193.2866 | 193.3560 | 49.0000 | 31.3926 | 1622597.5843 | 2848557.9514 | | | 16.0000 | -0.020000 |
| F-3 | 168+17.8926 | 49.0000 | 9193.1149 | 193.2102 | 49.0000 | 39.3926 | 1622605.5055 | 2848559.0717 | | | 24.0000 | -0.020000 |
| F-4 | 168+25.8926 | 49.0000 | 9192.9368 | 193.0486 | 49.0000 | 47.3926 | 1622613.4266 | 2848560.1920 | | | 32.0000 | -0.020000 |
| F-5 | 168+33.8926 | 49.0000 | 9192.7522 | 192.8697 | 49.0000 | 55.3926 | 1622621.3478 | 2848561.3123 | | | 40.0000 | -0.020000 |
| F-6 | 168+41.8926 | 49.0000 | 9192.5612 | 192.6730 | 49.0000 | 63.3926 | 1622629.2690 | 2848562.4326 | | | 48.0000 | -0.020000 |
| F-7 | 168+49.8926 | 49.0000 | 9192.3638 | 192.4591 | 49.0000 | 71.3926 | 1622637.1901 | 2848563.5530 | | | 56.0000 | -0.020000 |
| F-8 | 168+57.8926 | 49.0000 | 9192.1600 | 192.2294 | 49.0000 | 79.3926 | 1622645.1113 | 2848564.6733 | | | 64.0000 | -0.020000 |
| F-9 | 168+65.8926 | 49.0000 | 9191.9497 | 191.9863 | 49.0000 | 87.3926 | 1622653.0325 | 2848565.7936 | | | 72.0000 | -0.020000 |
| CL Abut 2 | 168+73.8926 | 49.0000 | 9191.7330 | 191.7330 | 49.0000 | 95.3926 | 1622660.9536 | 2848566.9139 | 51.3608 | -17 26 21.56 | 80.0000 | -0.020000 |
| BF Abut 2 | 168+75.2026 | 49.0000 | 9191.6969 | | 49.0000 | 96.7026 | 1622662.2507 | 2848567.0974 | 51.3608 | -17 26 21.56 | 81.3100 | -0.020000 |

RT Edge of Deck PARALLEL TO HORIZONTAL CONTROL 0.250000 FEET BELOW FINISHED GRADE

| BENT LINE | STATION | OFFSET | ELEVATION | ELEV+DL | X | Y | NORTHING | EASTING | BENT LNTH | SKEW | GIRDER LNTH | CRS-SLP |
|---|---|---|---|---|---|---|---|---|---|---|---|---|
| BF Abut 1 | 167+93.0538 | 50.5000 | 9193.5970 | | 50.5000 | 14.5538 | 1622580.7014 | 2848557.0785 | 52.9331 | -17 26 21.56 | -1.3100 | -0.020000 |
| CL Abut 1 | 167+94.3638 | 50.5000 | 9193.5715 | 193.5715 | 50.5000 | 15.8638 | 1622581.9985 | 2848557.2619 | 52.9331 | -17 26 21.56 | 0.0000 | -0.020000 |
| F-1 | 168+02.3638 | 50.5000 | 9193.4123 | 193.4489 | 50.5000 | 23.8638 | 1622589.9196 | 2848558.3823 | | | 8.0000 | -0.020000 |
| F-2 | 168+10.3638 | 50.5000 | 9193.2466 | 193.3161 | 50.5000 | 31.8638 | 1622597.8408 | 2848559.5026 | | | 16.0000 | -0.020000 |
| F-3 | 168+18.3638 | 50.5000 | 9193.0746 | 193.1699 | 50.5000 | 39.8638 | 1622605.7620 | 2848560.6229 | | | 24.0000 | -0.020000 |
| F-4 | 168+26.3638 | 50.5000 | 9192.8961 | 193.0079 | 50.5000 | 47.8638 | 1622613.6831 | 2848561.7432 | | | 32.0000 | -0.020000 |
| F-5 | 168+34.3638 | 50.5000 | 9192.7111 | 192.8286 | 50.5000 | 55.8638 | 1622621.6043 | 2848562.8635 | | | 40.0000 | -0.020000 |
| F-6 | 168+42.3638 | 50.5000 | 9192.5198 | 192.6316 | 50.5000 | 63.8638 | 1622629.5255 | 2848563.9839 | | | 48.0000 | -0.020000 |
| F-7 | 168+50.3638 | 50.5000 | 9192.3220 | 192.4173 | 50.5000 | 71.8638 | 1622637.4466 | 2848565.1042 | | | 56.0000 | -0.020000 |
| F-8 | 168+58.3638 | 50.5000 | 9192.1178 | 192.1872 | 50.5000 | 79.8638 | 1622645.3678 | 2848566.2245 | | | 64.0000 | -0.020000 |
| F-9 | 168+66.3638 | 50.5000 | 9191.9071 | 191.9437 | 50.5000 | 87.8638 | 1622653.2890 | 2848567.3448 | | | 72.0000 | -0.020000 |
| CL Abut 2 | 168+74.3638 | 50.5000 | 9191.6900 | 191.6900 | 50.5000 | 95.8638 | 1622661.2101 | 2848568.4651 | 52.9331 | -17 26 21.56 | 80.0000 | -0.020000 |
| BF Abut 2 | 168+75.6738 | 50.5000 | 9191.6539 | | 50.5000 | 97.1738 | 1622662.5072 | 2848568.6486 | 52.9331 | -17 26 21.56 | 81.3100 | -0.020000 |

RT Outside WW PARALLEL TO HORIZONTAL CONTROL 0.250000 FEET BELOW FINISHED GRADE

| BENT LINE | STATION | OFFSET | ELEVATION | ELEV+DL | X | Y | NORTHING | EASTING | BENT LNTH | SKEW | GIRDER LNTH | CRS-SLP |
|---|---|---|---|---|---|---|---|---|---|---|---|---|
| End WW2 | 167+80.8350 | 52.0000 | 9193.7961 | | 52.0000 | 2.3350 | 1622568.3929 | 2848556.8526 | 52.0000 | 0 00 00.00 | 2.3350 | -0.020000 |
| CL RT A1 | 167+94.8350 | 52.0000 | 9193.5323 | | 52.0000 | 16.3350 | 1622582.2549 | 2848558.8131 | 52.0000 | 0 00 00.00 | 16.3350 | -0.020000 |
| CL RT A2 | 168+74.8350 | 52.0000 | 9191.6471 | | 52.0000 | 96.3350 | 1622661.4666 | 2848570.0163 | 52.0000 | 0 00 00.00 | 96.3350 | -0.020000 |
| End WW4 | 168+88.8350 | 52.0000 | 9191.2510 | | 52.0000 | 110.3350 | 1622675.3287 | 2848571.9769 | 52.0000 | 0 00 00.00 | 110.3350 | -0.020000 |

NOTE: ELEVATION ARE AT TOP OF CONCRETE DECK 0.25 FEET BELOW FINISHED GRADE.

POSITIVE ROADWAY CROSS SLOPES IS UPWARDS FROM THE PROFILE GRADE LINE.

THESE STATIONS, COORDINATES, OFFSETS, AND LENGTHS DEFINE THE LAYOUT OF THE STRUCTURE IN A TWO DIMENSIONAL HORIZONTAL PLANE. ELEVATIONS DEFINE THE FINAL GRADE OF THE FINISHED CONCRETE. FABRICATION OF STRUCTURAL COMPONENTS THRU THE DIRECT USE OF THIS INFORMATION IS NOT INTENDED OR ADVISABLE.

| Design | | | Detail | | | Quantities | | |
|---|---|---|---|---|---|---|---|---|
| | INITIAL | DATE | | INITIAL | DATE | | INITIAL | DATE |
| Designed By | PPC | 09/07 | Detailed By | JSV | 10/07 | Quantities By | JSV | 11/07 |
| Checked By | MCY | 09/07 | Checked By | PPC | 11/07 | Checked By | PPC | 11/07 |

Print Date 8/25/2008
File Name: 25 Bridge Deck Elevations3.dgn
Horiz. Scale 1:12 Vert. Scale: 1:1
Staff Bridge Branch - Unit 0221 STW

Sheet Revisions

| Date: | Comments | Init. |
|---|---|---|
| | | |
| | | |
| | | |
| | | |

Colorado Department of Transportation
4201 East Arkansas Avenue
Room 107
Denver, CO 80222
Phone: 303-512-4072 FAX: 303-757-9197
Staff Bridge Branch STW

As Constructed
No Revisions:
Revised:
Void:

BRIDGE DECK ELEVATIONS
(SHEET 3 OF3)

Designer: P. Chomsrimake
Detailer: C .Lenway
Sheet Subset: Bridge
Structure Numbers F-12-BW
Subset Sheets: B25 of 25

Project No./Code
STA 0091-035
16439
Sheet Number 88

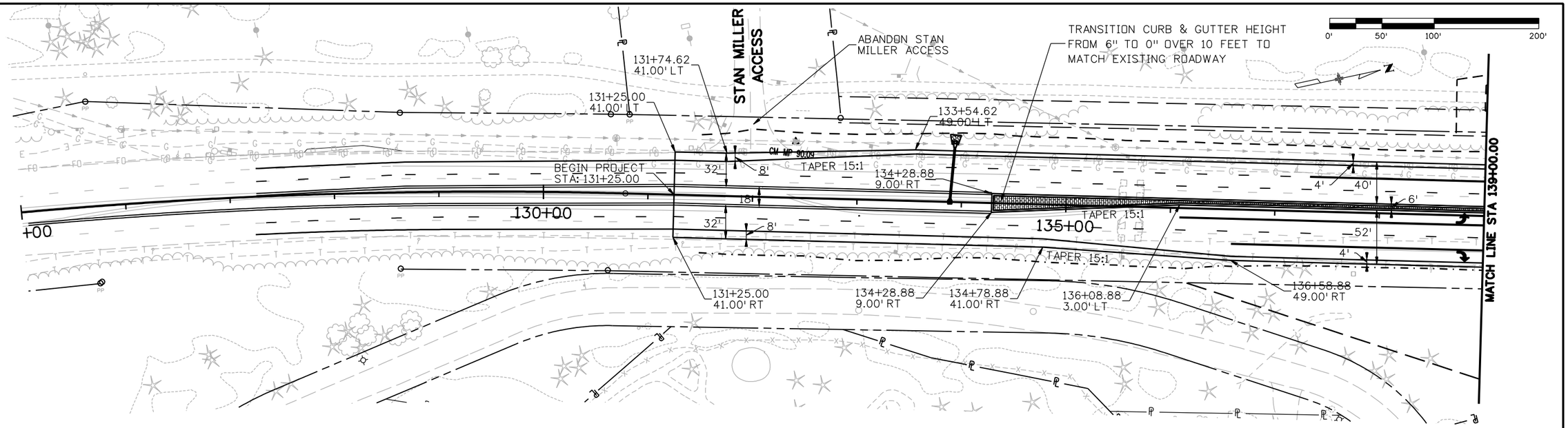


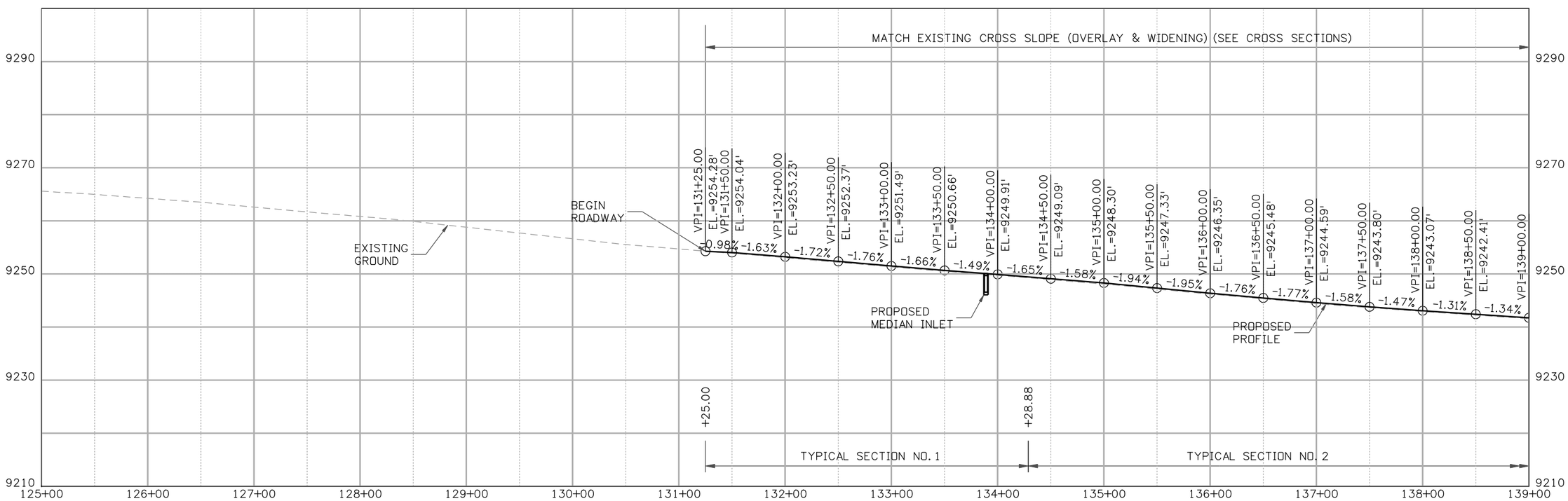


| | | | |
|---|---|---|---|
| Print Date: 1/16/2009 | | | |
| File Name: 16439Plan_Profile1.dgn | | | |
| Horiz. Scale: 1:100 | Vert. Scale: As Noted | | |
| Unit Information | Unit Leader Initials | | |

R-X

**Sheet Revisions**

| Date: | Comments | Init. |
|---|---|---|
| | | |
| | | |
| | | |
| | | |

Colorado Department of Transportation
DOT DEPARTMENT OF TRANSPORTATION
Mountain Residency P.O. Box 399
Dumont, CO 80436
Phone: 303-512-5750 FAX: 303-512-5775
Region 1 DCW

As Constructed
No Revisions:
Revised:
Void:

SH 9 ROADWAY PLAN AND PROFILE
STA 125+00 TO 139+00

| | | | |
|---|---|---|---|
| Designer: | TJT | Structure Numbers | |
| Detailer: | TJT | | |
| Sheet Subset: ROADWAY | | Subset Sheets: | 1 OF 9 |

Project No./Code
STA 0091-035
16439
Sheet Number 89

tuttlet 2:20:51 PM C:\Projects\16439\Design\Drawings\16439Plan_Profile1.dgn

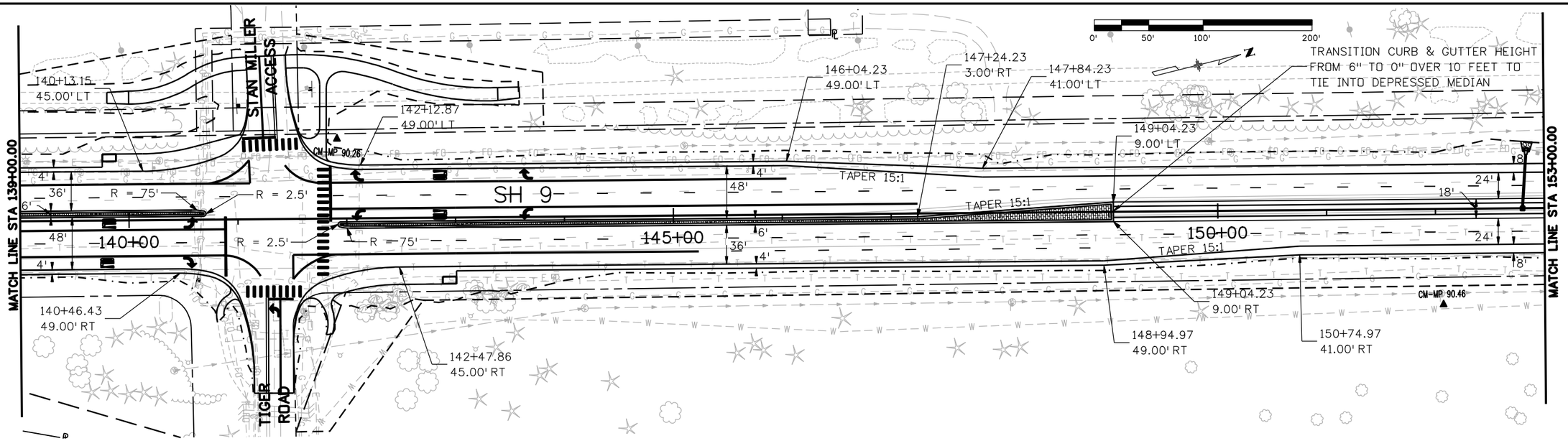


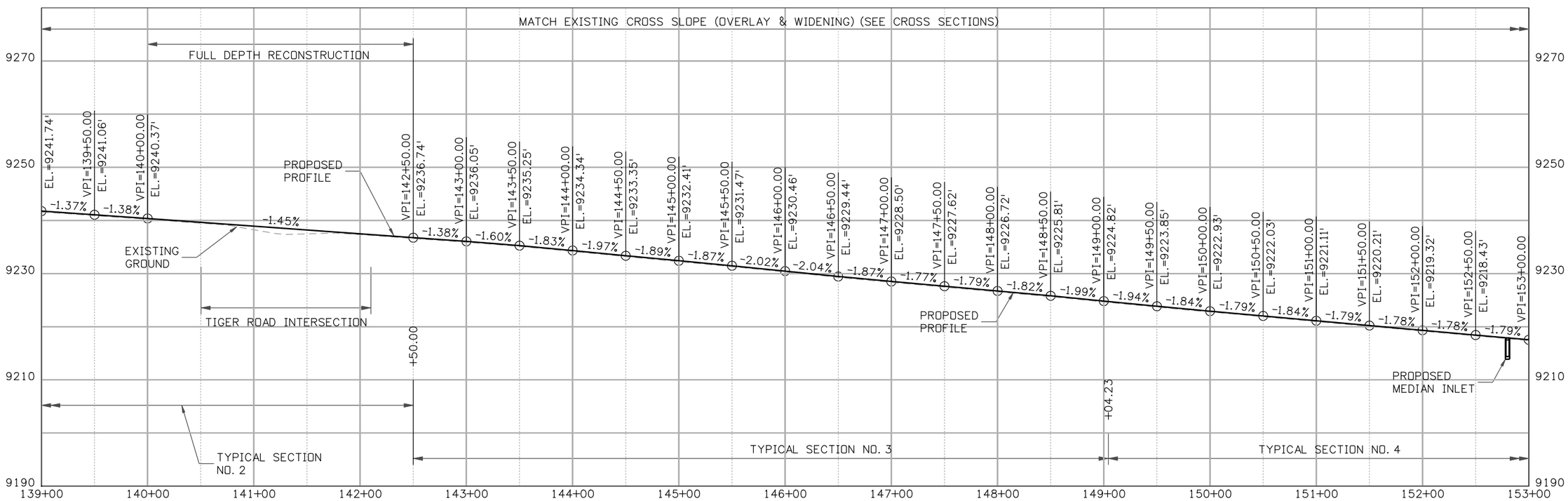


| | | | |
|---|---|---|---|
| Print Date: 1/16/2009 | | | |
| File Name: 16439Plan_Profile2.dgn | | | |
| Horiz. Scale: 1:100 | Vert. Scale: As Noted | | |
| Unit Information | Unit Leader Initials | | |

R-X

**Sheet Revisions**

| Date: | Comments | Init. |
|---|---|---|
| | | |
| | | |
| | | |
| | | |


Colorado Department of Transportation
DOT DEPARTMENT OF TRANSPORTATION
Mountain Residency P.O. Box 399
Dumont, CO 80436
Phone: 303-512-5750 FAX: 303-512-5775
Region 1 DCW


As Constructed
No Revisions:
Revised:
Void:

**SH 9 ROADWAY PLAN AND PROFILE**
**STA 139+00 TO 153+00**

| | | | |
|---|---|---|---|
| Designer: | TJT | Structure Numbers | |
| Detailer: | TJT | | |
| Sheet Subset: | ROADWAY | Subset Sheets: | 2 OF 9 |

Project No./Code
STA 0091-035
16439
Sheet Number 90

tuttlet 2:21:15 PM C:\Projects\16439\Design\Drawings\16439Plan_Profile2.dgn

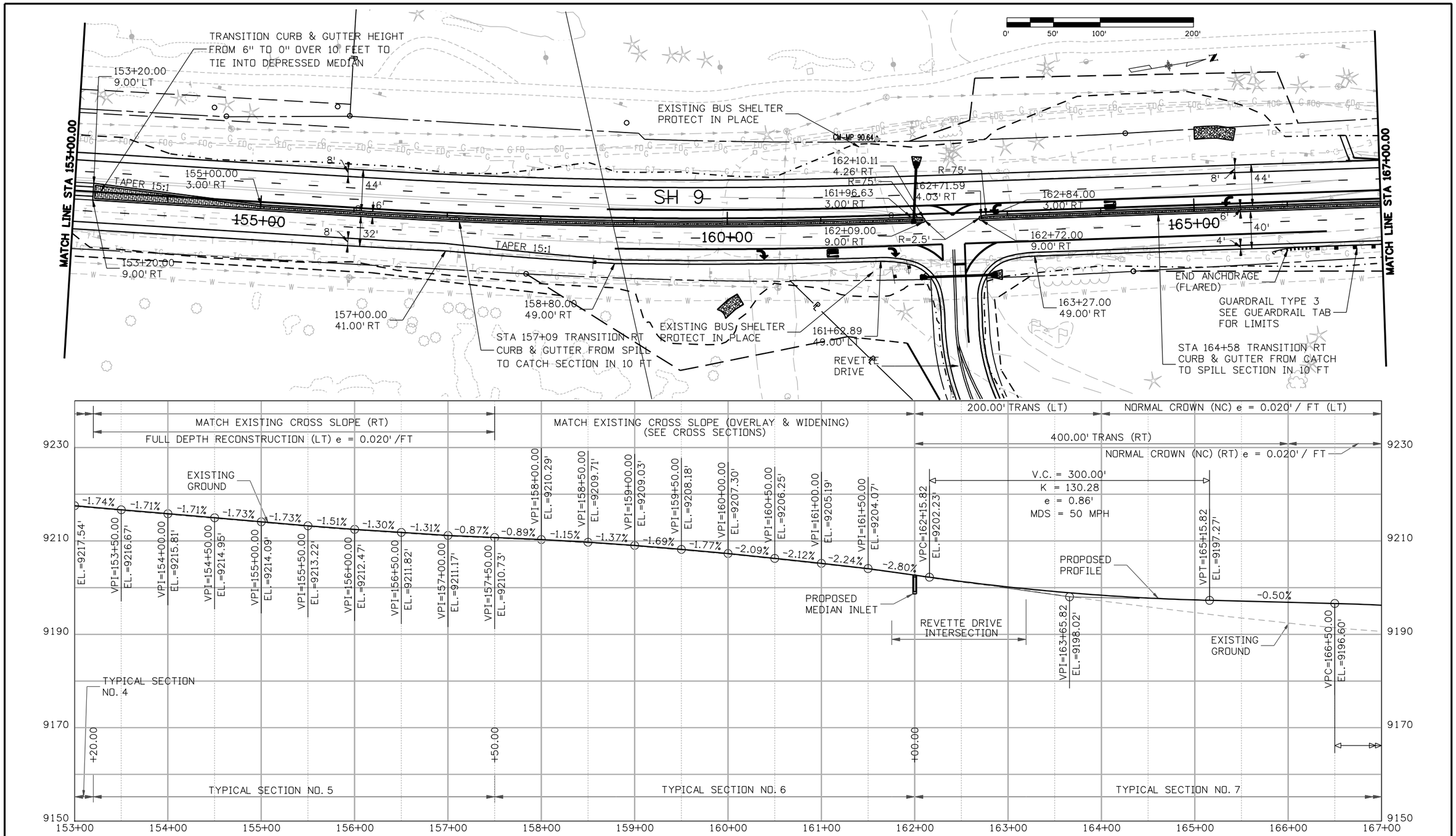


| | | | |
|---|---|---|---|
| Print Date: 1/16/2009 | | Sheet Revisions | |
| File Name: 16439Plan_Profile3.dgn | | Date: | Comments | Init. |
| Horiz. Scale: 1:100 | Vert. Scale: As Noted | R-X | | |
| Unit Information | Unit Leader Initials | | | |

Colorado Department of Transportation
Mountain Residency P.O. Box 399
Dumont, CO 80436
Phone: 303-512-5750 FAX: 303-512-5775
Region 1 DCW

As Constructed
No Revisions:
Revised:
Void:

SH 9 ROADWAY PLAN AND PROFILE
STA 153+00 TO 167+00

| | | | |
|---|---|---|---|
| Designer: | TJT | Structure Numbers | |
| Detailer: | TJT | | |
| Sheet Subset: | ROADWAY | Subset Sheets: | 3 OF 9 |

Project No./Code
STA 0091-035
16439
Sheet Number 91

tuttlet 2:21:42 PM C:\Projects\16439\Design\Drawings\16439Plan_Profile3.dgn

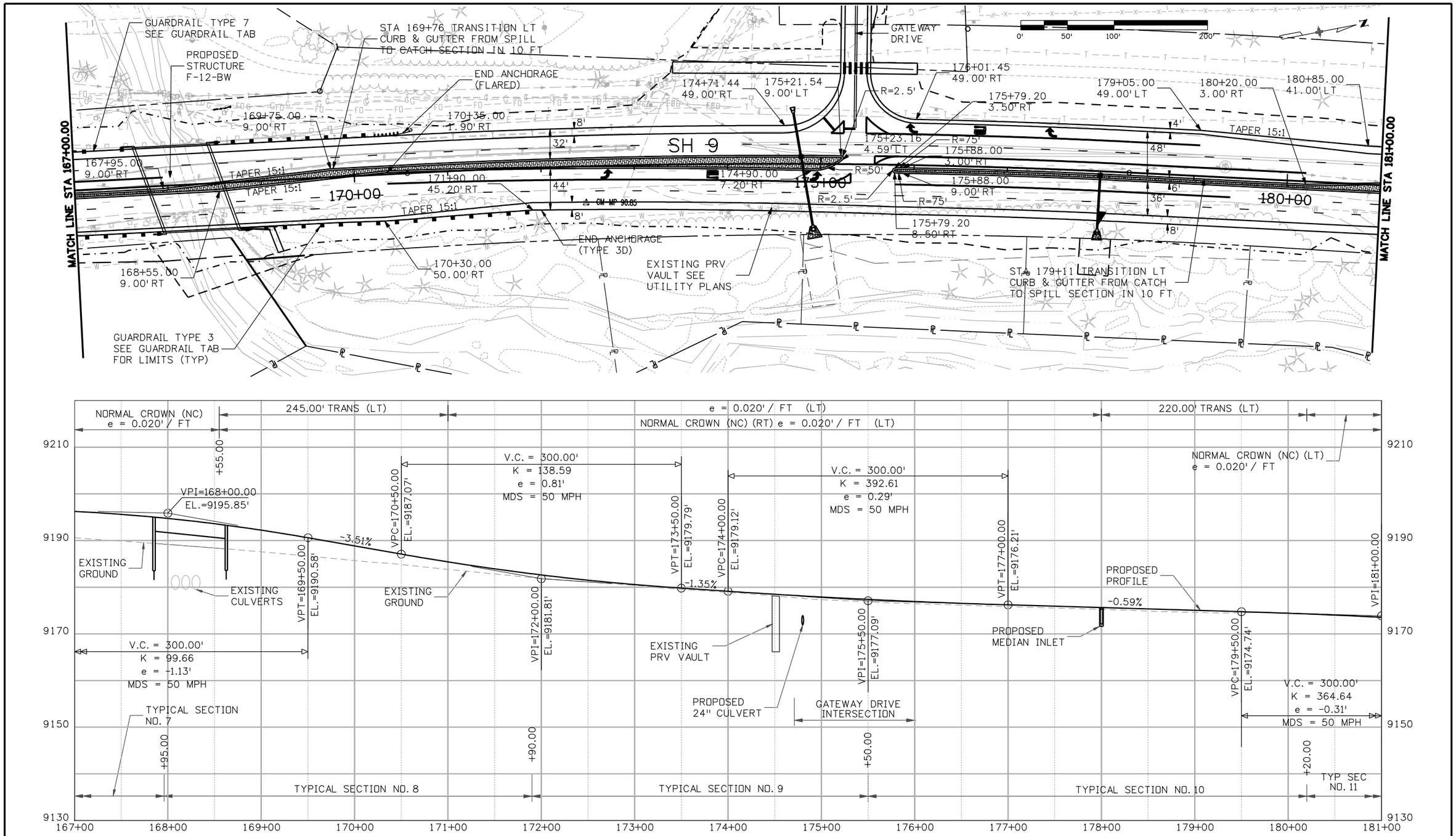


| | | | |
|---|---|---|---|
| Print Date: 1/16/2009 | | | |
| File Name: 16439Plan_Profile4.dgn | | | |
| Horiz. Scale: 1:100 | Vert. Scale: As Noted | | |
| Unit Information | Unit Leader Initials | | |

R-X

**Sheet Revisions**

| Date: | Comments | Init. |
|---|---|---|
| | | |
| | | |
| | | |
| | | |

Colorado Department of Transportation

DOT — DEPARTMENT OF TRANSPORTATION

Mountain Residency P.O. Box 399
Dumont, CO 80436
Phone: 303-512-5750 FAX: 303-512-5775

Region 1 DCW

As Constructed

No Revisions:

Revised:

Void:

# SH 9 ROADWAY PLAN AND PROFILE STA 167+00 TO 181+00

| | | | |
|---|---|---|---|
| Designer: | TJT | Structure Numbers | EXIST. F-12-AX |
| Detailer: | TJT | | NEW F-12-BW |
| Sheet Subset: | ROADWAY | Subset Sheets: | 4 OF 9 |

Project No./Code

STA 0091-035

16439

Sheet Number 92

tuttlet 2:22:13 PM C:\Projects\16439\Design\Drawings\16439Plan_Profile4.dgn

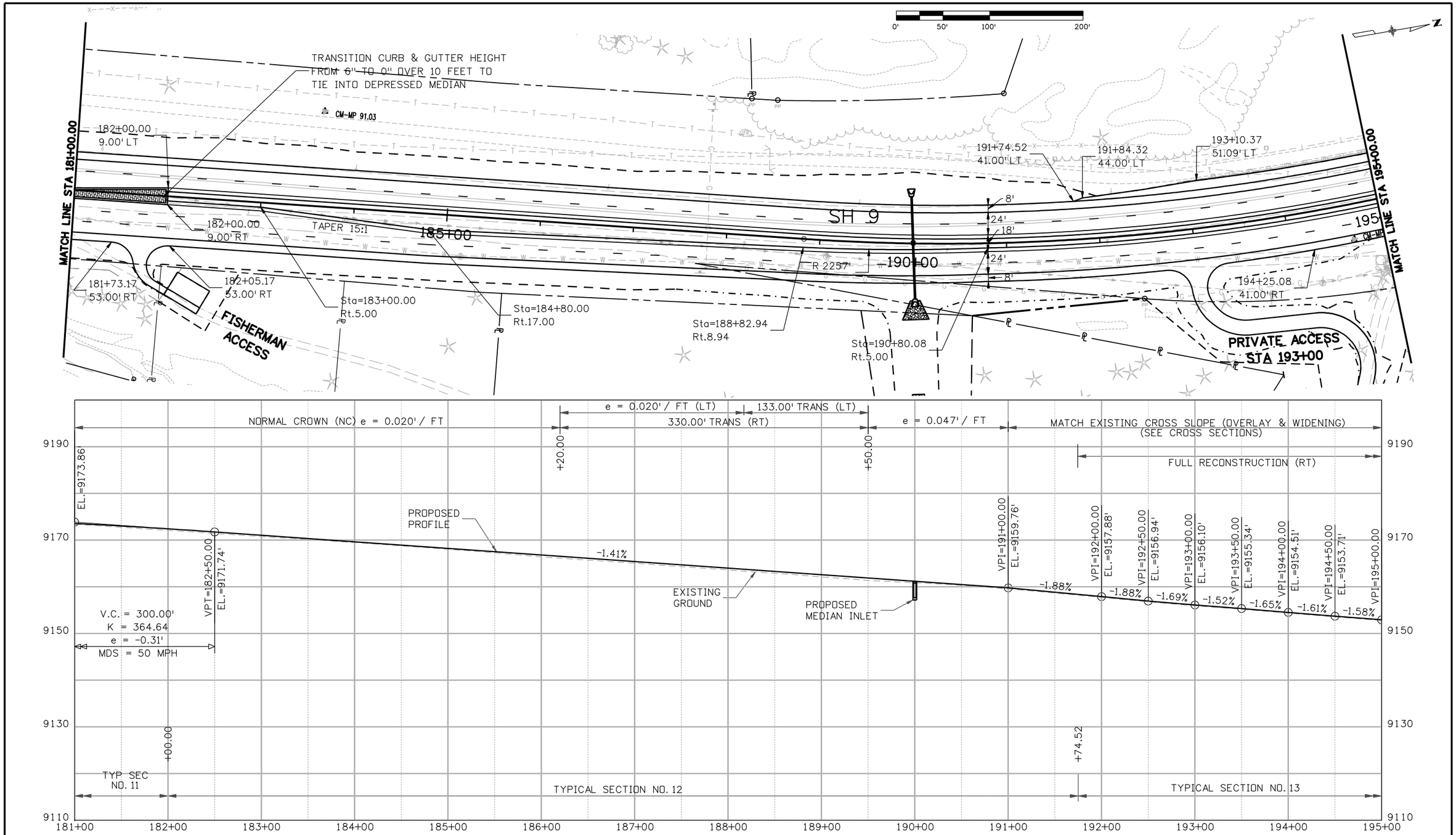


| | | | |
|---|---|---|---|
| Print Date: 1/16/2009 | | | |
| File Name: 16439Plan_Profile5.dgn | | | |
| Horiz. Scale: 1:100 | Vert. Scale: As Noted | | |
| Unit Information | Unit Leader Initials | | |

R-X

**Sheet Revisions**

| Date: | Comments | Init. |
|---|---|---|
| | | |
| | | |
| | | |
| | | |

Colorado Department of Transportation

DOT DEPARTMENT OF TRANSPORTATION

Mountain Residency P.O. Box 399
Dumont, CO 80436
Phone: 303-512-5750 FAX: 303-512-5775

Region 1 DCW

As Constructed

No Revisions:

Revised:

Void:

**SH 9 ROADWAY PLAN AND PROFILE**
**STA 181+00 TO 195+00**

| | | | |
|---|---|---|---|
| Designer: | TJT | Structure Numbers | |
| Detailer: | TJT | | |
| Sheet Subset: | ROADWAY | Subset Sheets: | 5 OF 9 |

Project No./Code

STA 0091-035

16439

Sheet Number 93

tuttlet 2:22:59 PM C:\Projects\16439\Design\Drawings\16439Plan_Profile5.dgn

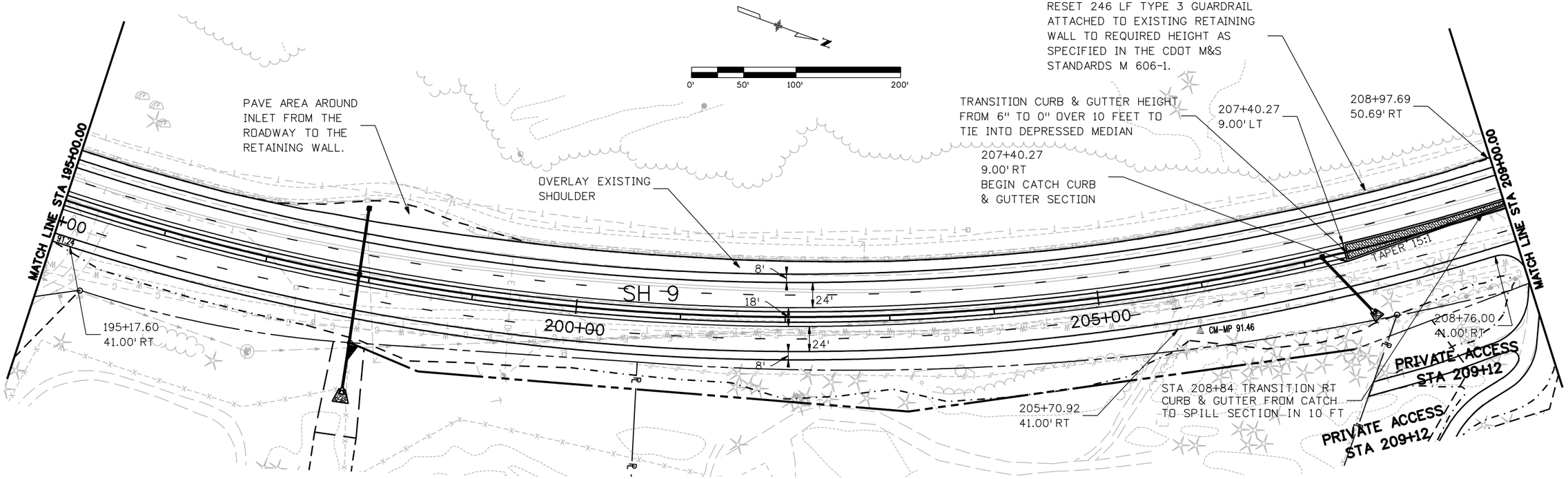


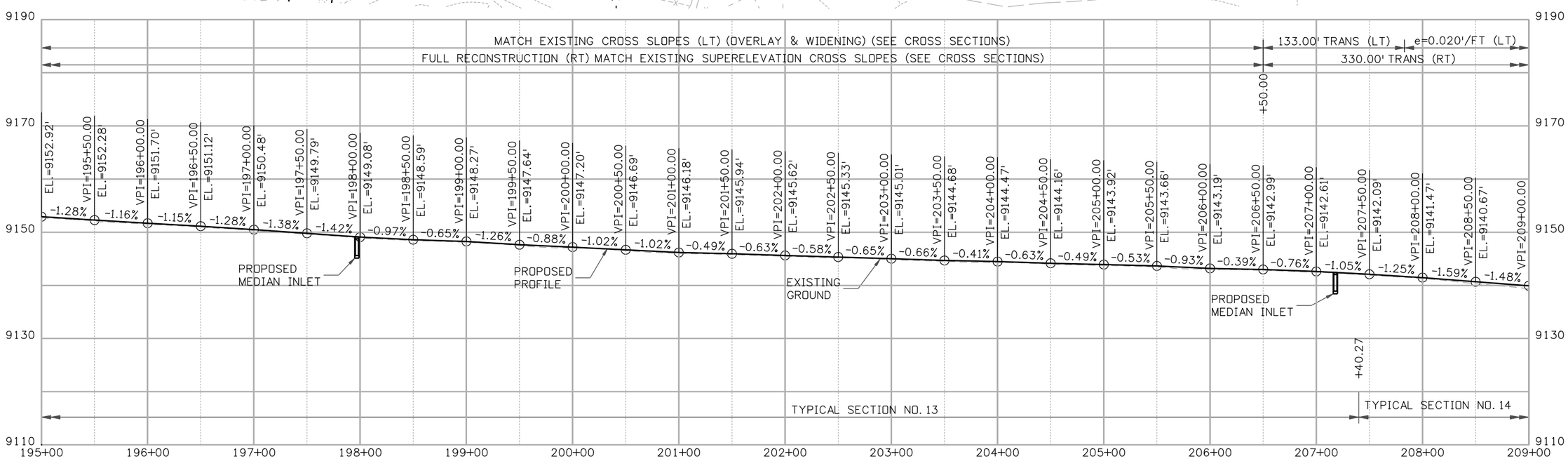


| | | | |
|---|---|---|---|
| Print Date: 1/16/2009 | Sheet Revisions | Colorado Department of Transportation | As Constructed |
| File Name: 16439Plan_Profile6.dgn | Date: / Comments / Init. | Mountain Residency P.O. Box 399 Dumont, CO 80436 Phone: 303-512-5750 FAX: 303-512-5775 | No Revisions: |
| Horiz. Scale: 1:100 Vert. Scale: As Noted | R-X | Region 1 DCW | Revised: |
| Unit Information Unit Leader Initials | | | Void: |

**SH 9 ROADWAY PLAN AND PROFILE STA 195+00 TO 209+00**

| | | | |
|---|---|---|---|
| Designer: TJT | Structure Numbers | | Project No./Code |
| Detailer: TJT | | | STA 0091-035 |
| Sheet Subset: ROADWAY | Subset Sheets: 6 OF 9 | | 16439 |
| | | | Sheet Number 94 |

tuttlet 2:23:39 PM C:\Projects\16439\Design\Drawings\16439Plan_Profile6.dgn

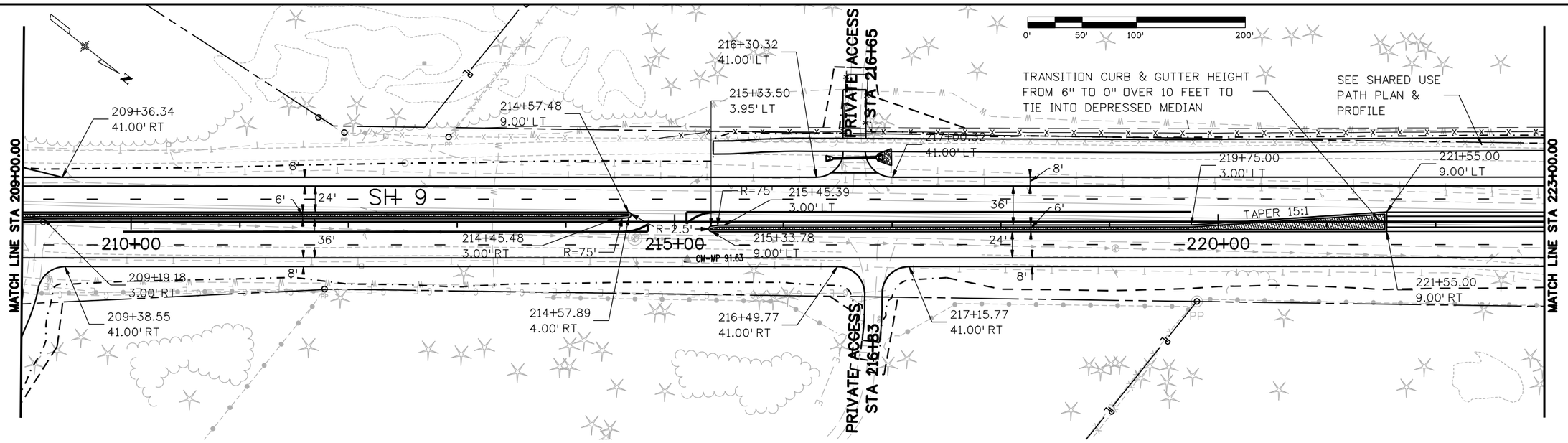


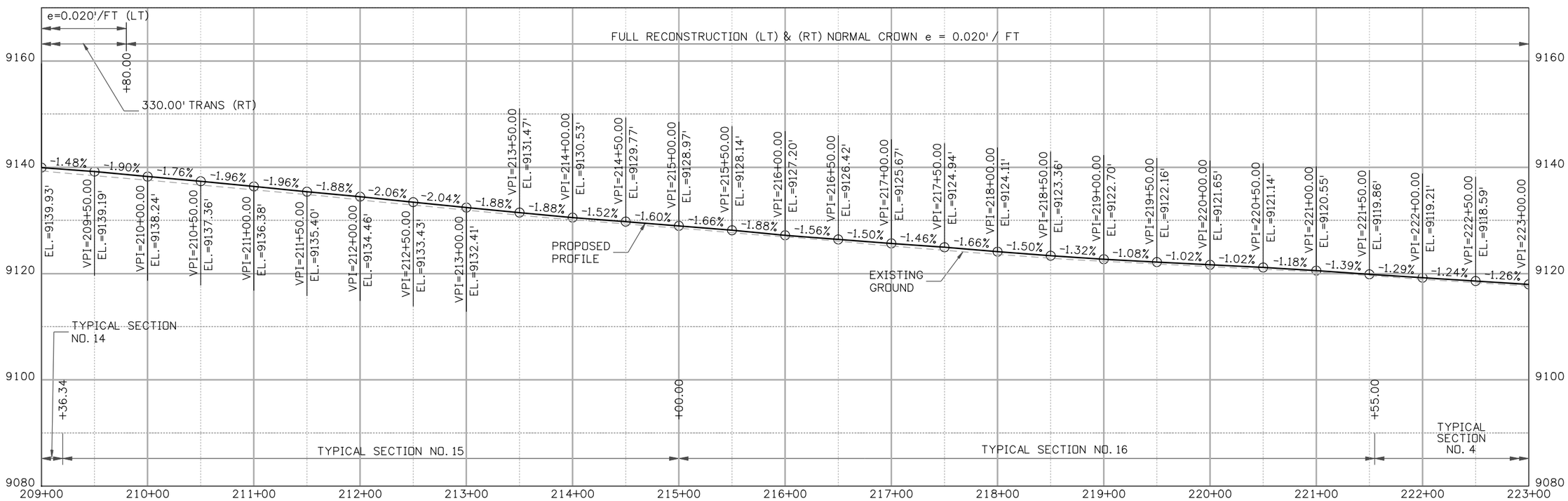


| | | | |
|---|---|---|---|
| Print Date: 1/16/2009 | Sheet Revisions | Colorado Department of Transportation | As Constructed |
| File Name: 16439Plan_Profile7.dgn | Date: / Comments / Init. | Mountain Residency P.O. Box 399 Dumont, CO 80436 Phone: 303-512-5750 FAX: 303-512-5775 | No Revisions: |
| Horiz. Scale: 1:100 Vert. Scale: As Noted | R-X | Region 1 DCW | Revised: |
| Unit Information Unit Leader Initials | | | Void: |

SH 9 ROADWAY PLAN AND PROFILE
STA 209+00 TO 223+00

| | | | |
|---|---|---|---|
| Designer: | TJT | Structure Numbers | |
| Detailer: | TJT | | |
| Sheet Subset: | ROADWAY | Subset Sheets: | 7 OF 9 |

Project No./Code
STA 0091-035
16439
Sheet Number 95

tuttlet 2:24:27 PM C:\Projects\16439\Design\Drawings\16439Plan_Profile7.dgn

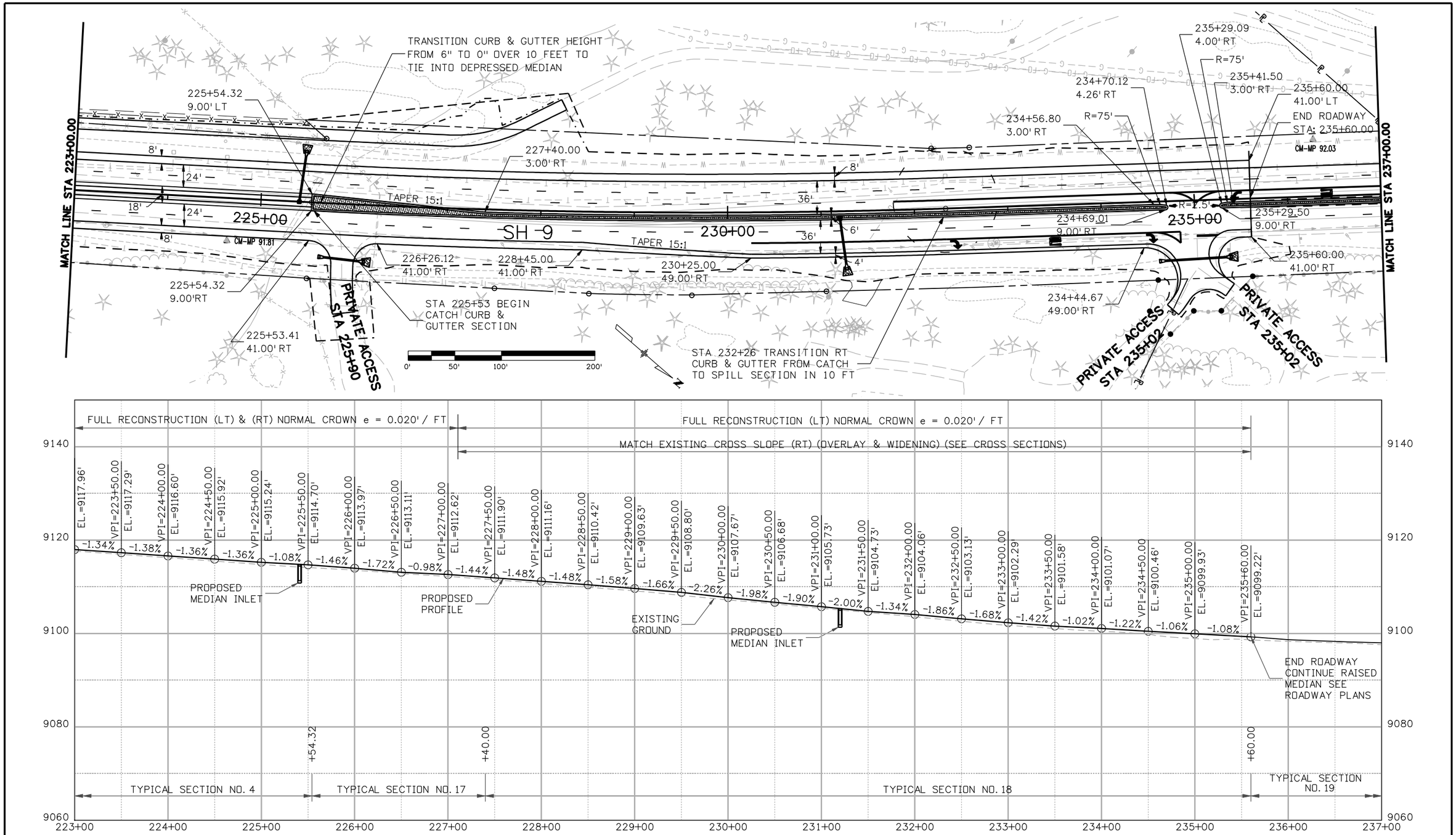


| | | | |
|---|---|---|---|
| Print Date: 1/16/2009 | | | |
| File Name: 16439Plan_Profile8.dgn | | | |
| Horiz. Scale: 1:100 | Vert. Scale: As Noted | | |
| Unit Information | Unit Leader Initials | | |

R-X

**Sheet Revisions**

| Date: | Comments | Init. |
|---|---|---|
| | | |
| | | |
| | | |
| | | |

Colorado Department of Transportation
DOT
DEPARTMENT OF TRANSPORTATION
Mountain Residency P.O. Box 399
Dumont, CO 80436
Phone: 303-512-5750 FAX: 303-512-5775
Region 1 DCW

As Constructed
No Revisions:
Revised:
Void:

# SH 9 ROADWAY PLAN AND PROFILE STA 223+00 TO 237+00

| | | | |
|---|---|---|---|
| Designer: | TJT | Structure Numbers | |
| Detailer: | TJT | | |
| Sheet Subset: | ROADWAY | Subset Sheets: | 8 OF 9 |

Project No./Code
STA 0091-035
16439
Sheet Number 96

tuttlet 2:25:16 PM C:\Projects\16439\Design\Drawings\16439Plan_Profile8.dgn

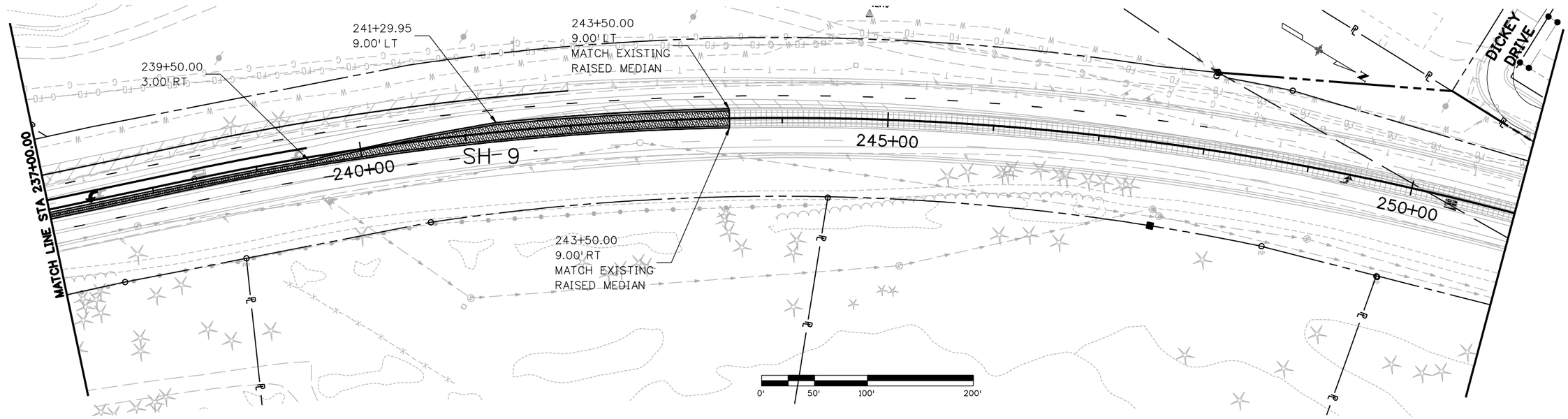


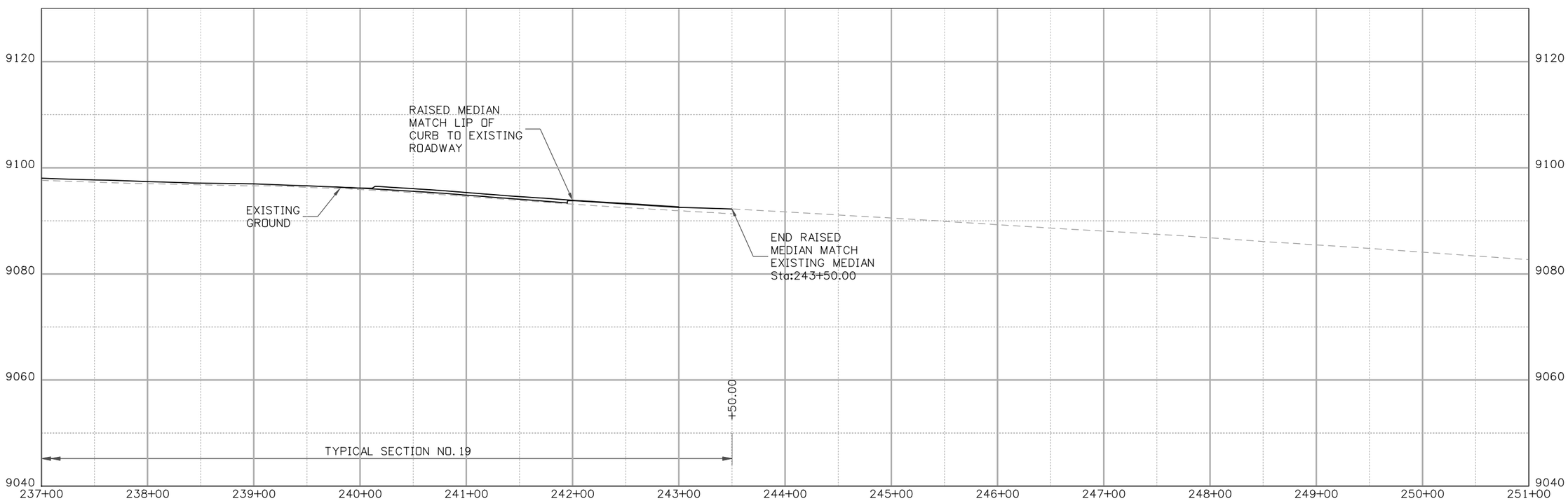


| | | | | | | |
|---|---|---|---|---|---|---|
| Print Date: 1/16/2009 | | Sheet Revisions | | | Colorado Department of Transportation | As Constructed |
| File Name: 16439Plan_Profile9.dgn | R-X | Date: | Comments | Init. | Mountain Residency P.O. Box 399<br>Dumont, CO 80436<br>Phone: 303-512-5750 FAX: 303-512-5775 | No Revisions: |
| Horiz. Scale: 1:100 Vert. Scale: As Noted | | | | | | Revised: |
| Unit Information Unit Leader Initials | | | | | Region 1 DCW | Void: |

| SH 9 ROADWAY PLAN AND PROFILE STA 237+00 TO 251+00 | | | | Project No./Code |
|---|---|---|---|---|
| | | | | STA 0091-035 |
| Designer: TJT | Structure Numbers | | | 16439 |
| Detailer: TJT | | | | |
| Sheet Subset: ROADWAY | Subset Sheets: 9 OF 9 | | | Sheet Number 97 |

tuttlet 2:26:16 PM C:\Projects\16439\Design\Drawings\16439Plan_Profile9.dgn

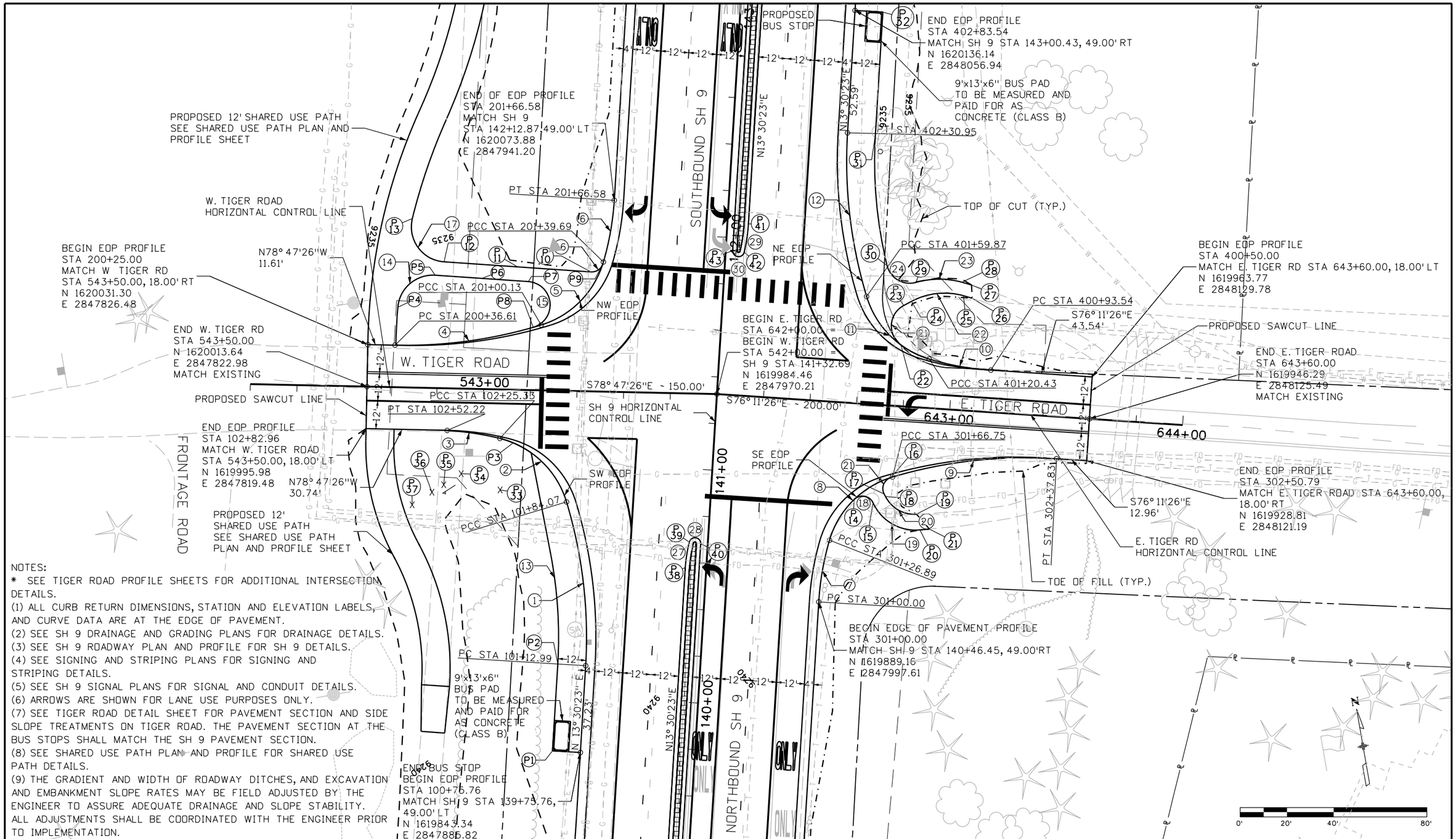


NOTES:

* SEE TIGER ROAD PROFILE SHEETS FOR ADDITIONAL INTERSECTION DETAILS.

(1) ALL CURB RETURN DIMENSIONS, STATION AND ELEVATION LABELS, AND CURVE DATA ARE AT THE EDGE OF PAVEMENT.

(2) SEE SH 9 DRAINAGE AND GRADING PLANS FOR DRAINAGE DETAILS.

(3) SEE SH 9 ROADWAY PLAN AND PROFILE FOR SH 9 DETAILS.

(4) SEE SIGNING AND STRIPING PLANS FOR SIGNING AND STRIPING DETAILS.

(5) SEE SH 9 SIGNAL PLANS FOR SIGNAL AND CONDUIT DETAILS.

(6) ARROWS ARE SHOWN FOR LANE USE PURPOSES ONLY.

(7) SEE TIGER ROAD DETAIL SHEET FOR PAVEMENT SECTION AND SIDE SLOPE TREATMENTS ON TIGER ROAD. THE PAVEMENT SECTION AT THE BUS STOPS SHALL MATCH THE SH 9 PAVEMENT SECTION.

(8) SEE SHARED USE PATH PLAN AND PROFILE FOR SHARED USE PATH DETAILS.

(9) THE GRADIENT AND WIDTH OF ROADWAY DITCHES, AND EXCAVATION AND EMBANKMENT SLOPE RATES MAY BE FIELD ADJUSTED BY THE ENGINEER TO ASSURE ADEQUATE DRAINAGE AND SLOPE STABILITY. ALL ADJUSTMENTS SHALL BE COORDINATED WITH THE ENGINEER PRIOR TO IMPLEMENTATION.

| | | | |
|---|---|---|---|
| Print Date: 1/14/2009 | Sheet Revisions | Colorado Department of Transportation | As Constructed |
| File Name: 14927PlanSheet01.dgn | Date: / Comments / Init. | Mountain Residency P.O. Box 399<br>Dumont, CO 80436<br>Phone: 303-512-5750 FAX: 303-512-5775 | No Revisions: |
| Horiz. Scale: 1:40 Vert. Scale: As Noted | R-X | Region 1 DCW | Revised: |
| Unit Information Unit Leader Initials | | | Void: |
| Stolfus & Associates, Inc.<br>5690 DTC Boulevard, Ste 101W<br>Greenwood Village, CO 80111 | | | |

| | | | |
|---|---|---|---|
| TIGER ROAD INTERSECTION DETAIL | | | Project No./Code |
| | | | STA 0091-035 |
| Designer: MRH | Structure Numbers | | 16439 |
| Detailer: LIW | | | |
| Sheet Subset: ROADWAY | Subset Sheets: 10 of 22 | | Sheet Number 98 |

$PLOT_INFO$

## CURVE DATA TABLE

| CURVE | RADIUS | LENGTH | TANGENT | DELTA | CENER OF CURVATURE | |
|---|---|---|---|---|---|---|
| | | | | | NORTHING | EASTING |
| 1 | 200.00' | 71.08' | 35.92' | 20° 21'52" | 1619926.25 | 2847700.05 |
| 2 | 40.00' | 41.26' | 22.67' | 59° 05'40" | 1619945.35 | 2847858.90 |
| 3 | 120.00' | 26.89' | 13.50' | 12° 50'17" | 1619872.30 | 2847826.30 |
| 4 | 200.00' | 63.52' | 32.03' | 18° 11'42" | 1620225.22 | 2847876.75 |
| 5 | 40.00' | 39.56' | 21.57' | 56° 40'12" | 1620066.41 | 2847896.21 |
| 6 | 120.00' | 26.89' | 13.50' | 12° 50'18" | 1620101.91 | 2847824.52 |
| 7 | 120.00' | 26.89' | 13.50' | 12° 50'17" | 1619861.14 | 2848114.30 |
| 8 | 40.00' | 39.86' | 21.76' | 57° 06'02" | 1619896.64 | 2848042.60 |
| 9 | 200.00' | 71.08' | 35.92' | 20° 21'52" | 1619737.68 | 2848060.87 |
| 10 | 120.00' | 26.89' | 13.50' | 12° 50'17" | 1620090.69 | 2848116.15 |
| 11 | 40.00' | 39.44' | 21.49' | 56° 29'40" | 1620019.19 | 2848080.27 |
| 12 | 200.00' | 71.08' | 35.92' | 20° 21'52" | 1620038.29 | 2848239.12 |
| 13 | 188.00' | 97.82' | 96.72' | 29° 48'40" | 1619926.25 | 2847700.05 |
| 14 | 15.00' | 23.31' | 21.03' | 89° 01'52" | 1620041.03 | 2847856.42 |
| 15 | 10.00' | 27.95' | 19.70' | 160° 07'19" | 1620036.25 | 2847896.50 |
| 16 | 5.00' | 6.67' | 6.19' | 76° 26'38" | 1620050.27 | 2847927.26 |
| 17 | 15.00' | 26.13' | 22.95' | 99° 47'38" | 1620075.16 | 2847868.37 |
| 18 | 5.00' | 9.55' | 8.16' | 109° 25'01" | 1619925.67 | 2848023.05 |
| 19 | 20.00' | 24.73' | 23.18' | 70° 50'42" | 1619931.95 | 2848047.25 |
| 20 | 14.00' | 16.19' | 15.30' | 66° 15'47" | 1619932.79 | 2848046.99 |
| 21 | 5.00' | 8.71' | 7.65' | 99° 46'23" | 1619931.34 | 2848038.02 |
| 22 | 10.00' | 20.19' | 16.93' | 115° 40'44" | 1619998.42 | 2848058.62 |
| 23 | 30.00' | 22.97' | 22.41' | 43° 52'12" | 1619980.60 | 2848068.46 |
| 24 | 36.00' | 19.82' | 19.57' | 31° 33'00" | 1619980.97 | 2848066.24 |
| 25 | 10.00' | 16.09' | 14.41' | 92° 10'55" | 1620026.72 | 2848061.50 |
| 26 | 188.00' | 56.55' | 56.33' | 17° 13'59" | 1620038.29 | 2848239.12 |
| 27 | 71.67' | 11.02' | 11.01' | 8° 48'29" | 1619895.62 | 2848013.22 |
| 28 | 2.50' | 7.43' | 4.98' | 170° 11'31" | 1619923.00 | 2847949.69 |
| 29 | 71.67' | 12.20' | 12.19' | 9° 45'11" | 1620070.63 | 2847926.35 |
| 30 | 2.50' | 7.43' | 4.98' | 170° 14'49" | 1620043.31 | 2847989.90 |

## POINT DATA TABLE

| POINT | STATION | OFFSET | ELEVATION | DESCRIPTION |
|---|---|---|---|---|
| P1 | SH9 139+75.76 | 61.00' LT | 9239.48 | END BUS STOP |
| P2 | SH9 140+12.99 | 61.00' LT | 9238.96 | PC |
| P3 | SH9 141+06.45 | 85.88' LT | 9237.19 | PT |
| P4 | W. TIGER 543+37.49 | 34.33' RT | 9236.53 | PC |
| P5 | W. TIGER 543+21.81 | 48.35' RT | 9235.80 | PT |
| P6 | W. TIGER 543+01.81 | 47.41' RT | 9235.98 | MDPT |
| P7 | W. TIGER 542+81.81 | 46.46' RT | 9236.11 | PC |
| P8 | W. TIGER 542+79.33 | 26.92' RT | 9236.58 | PT |
| P9 | W. TIGER 542+50.03 | 54.80' RT | 9236.63 | PC |
| P10 | W. TIGER 542+55.06 | 51.21' RT | 9236.50 | PT |
| P11 | W. TIGER 542+86.60 | 52.70' RT | 9235.96 | MDPT |
| P12 | W. TIGER 543+18.14 | 54.18' RT | 9235.55 | PC |
| P13 | W. TIGER 543+32.08 | 72.41' RT | 9235.32 | PT |
| P14 | E. TIGER 642+61.74 | 41.11' RT | 9237.65 | PC |
| P15 | E. TIGER 642+69.85 | 42.10' RT | 9237.29 | PT |
| P16 | E. TIGER 642+76.80 | 30.74' RT | 9237.10 | PRC |
| P17 | E. TIGER 642+74.34 | 37.98' RT | 9237.20 | PT |
| P18 | E. TIGER 642+75.00 | 39.08' RT | 9237.17 | PC |
| P19 | E. TIGER 642+88.79 | 45.73' RT | 9236.55 | PT |
| P20 | E. TIGER 642+90.64 | 52.35' RT | 9236.75 | PT |
| P21 | E. TIGER 642+94.68 | 51.69' RT | 9236.66 | END TRAIL |
| P22 | SH9 141+58.50 | 77.40' RT | 9236.31 | PC |
| P23 | SH9 141+75.43 | 77.55' RT | 9236.94 | PT |
| P24 | SH9 141+77.42 | 80.79' RT | 9235.80 | PC |
| P25 | SH9 141+81.20 | 102.88' RT | 9235.12 | PT |
| P26 | SH9 141+80.38 | 106.64' RT | 9235.10 | END TRAIL |
| P27 | SH9 141+86.01 | 106.08' RT | 9235.18 | END TRAIL |
| P28 | SH9 141+86.92 | 101.85' RT | 9235.22 | PC |
| P29 | SH9 141+85.68 | 82.32' RT | 9235.71 | PRC |
| P30 | SH9 141+92.14 | 69.44' RT | 9236.18 | PCC |
| P31 | SH9 142+47.84 | 61.00' RT | 9235.56 | PT |
| P32 | SH9 143+00.43 | 61.00' RT | 9234.83 | END BUS STOP |
| P33 | W. TIGER 542+92.04 | 43.06' LT | 9236.42 | DITCH BOTTOM |
| P34 | W. TIGER 543+08.88 | 36.43' LT | 9236.34 | DITCH BOTTOM |
| P35 | W. TIGER 543+16.24 | 41.35' LT | 9235.85 | DITCH BOTTOM |
| P36 | W. TIGER 543+21.23 | 44.68' LT | 9235.51 | DITCH BOTTOM |
| P37 | W. TIGER 543+29.55 | 50.23' LT | 9234.95 | DITCH BOTTOM |
| P38 | SH9 140+57.61 | 9.00' LT | 9239.35 | PC |
| P39 | SH9 140+68.56 | 7.96' LT | 9239.21 | PCC |
| P40 | SH9 140+68.14 | 3.00' LT | 9239.32 | PT |
| P41 | SH9 142+06.23 | 9.00' RT | 9237.20 | PC |
| P42 | SH9 141+94.09 | 7.96' RT | 9237.39 | PCC |
| P43 | SH9 141+94.52 | 3.00' RT | 9237.49 | PT |

## TYPICAL SECTION NOTES

▲ Break points in slopes and in bottom of ditches shall be rounded during construction for a pleasing appearance.

For roadway cross slopes refer to roadway profile, curb return profiles, and intersection details.

Vertical alignment points.

See Removal Plans for limits of pavement removal and sawcut lines.

The gradient and width of roadway ditches, and excavation and embankment slope rates may be field adjusted by the engineer to assure adequate drainage and slope stability. All adjustments shall be coordinated with the engineer prior to implementation.

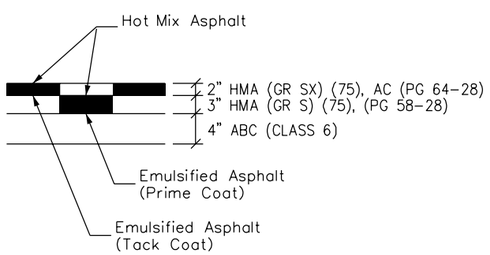


FLEXIBLE PAVEMENT SECTION

TIGER ROAD

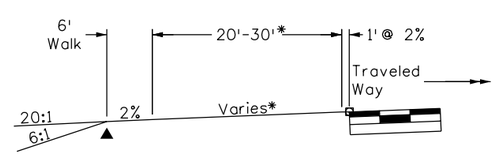


NORTH SIDE
LOOKING EAST

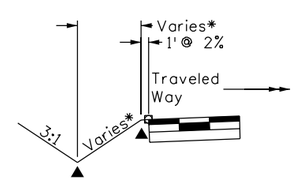


SOUTH SIDE
LOOKING WEST

WEST TIGER ROAD SIDE SLOPE TREATMENTS

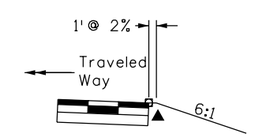


NORTH SIDE LOOKING WEST AND
SOUTH SIDE LOOKING EAST

EAST TIGER ROAD SIDE SLOPE TREATMENTS

*SEE THIS SHEET AND TIGER ROAD INTERSECTION DETAIL FOR POINT ELEVATIONS

| | | | |
|---|---|---|---|
| Print Date: 9/26/2008 | Sheet Revisions | Colorado Department of Transportation | As Constructed |
| File Name: 14927PlanSheet02.dgn | Date: / Comments / Init. | Mountain Residency P.O. Box 399 Dumont, CO 80436 Phone: 303-512-5750 FAX: 303-512-5775 | No Revisions: |
| Horiz. Scale: 1:1 Vert. Scale: As Noted | R-X | Region 1 DCW | Revised: |
| Unit Information Unit Leader Initials | | | Void: |
| Stolfus & Associates, Inc. 5690 DTC Boulevard, Ste 101W Greenwood Village, CO 80111 | | | |

| TIGER ROAD INTERSECTION DETAIL | | | |
|---|---|---|---|
| Designer: MRH | Structure Numbers | | |
| Detailer: LIW | | | |
| Sheet Subset: ROADWAY | Subset Sheets: 11 of 22 | | |

| Project No./Code |
|---|
| STA 0091-035 |
| 16439 |
| Sheet Number 99 |

$PLOT_INFO$

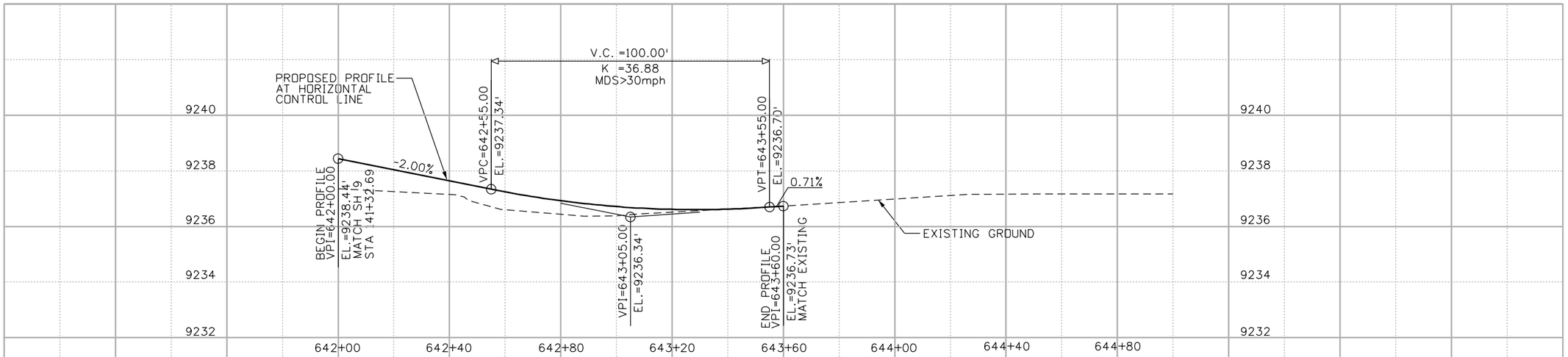


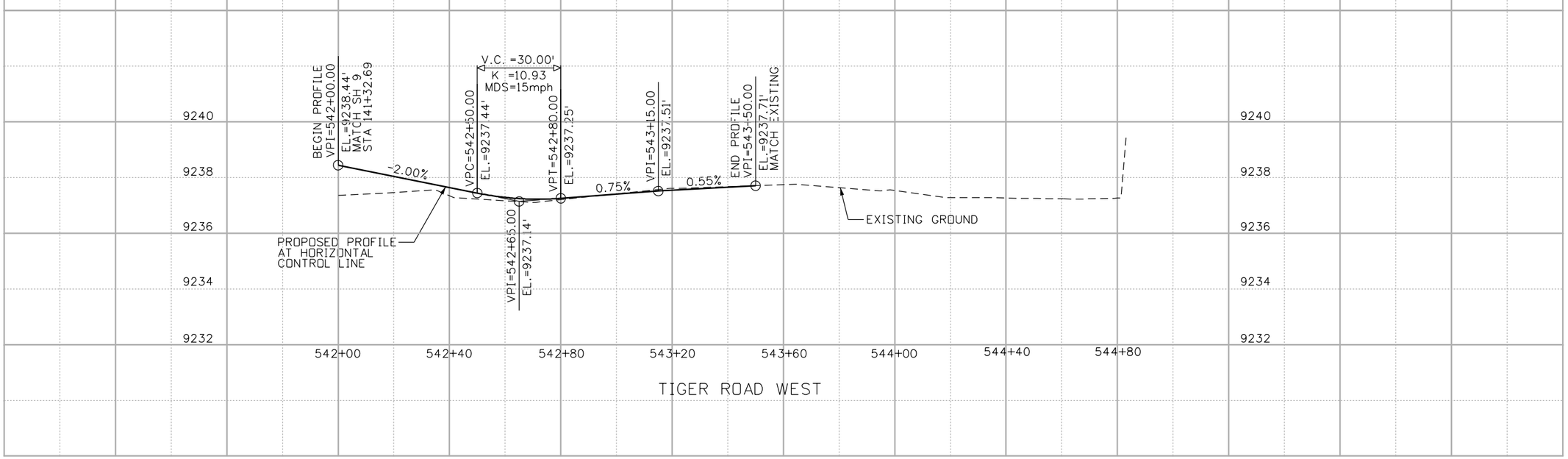


| | | | |
|---|---|---|---|
| Print Date: 9/26/2008 | Sheet Revisions | Colorado Department of Transportation | As Constructed |
| File Name: 14927ProfileSheet01.dgn | Date: / Comments / Init. | DOT Mountain Residency P.O. Box 399 Dumont, CO 80436 Phone: 303-512-5750 FAX: 303-512-5775 | No Revisions: |
| Horiz. Scale: 1:40 Vert. Scale: As Noted | R-X | Region 1 DCW | Revised: |
| Unit Information Unit Leader Initials | | | Void: |
| Stolfus & Associates, Inc. 5690 DTC Boulevard, Ste 101W Greenwood Village, CO 80111 | | | |

| TIGER ROAD PROFILES | | | Project No./Code |
|---|---|---|---|
| Designer: MRH | Structure Numbers | | STA 0091-035 |
| Detailer: LIW | | | 16439 |
| Sheet Subset: ROADWAY | Subset Sheets: 12 of 22 | | Sheet Number 100 |

$PLOT_INFO$

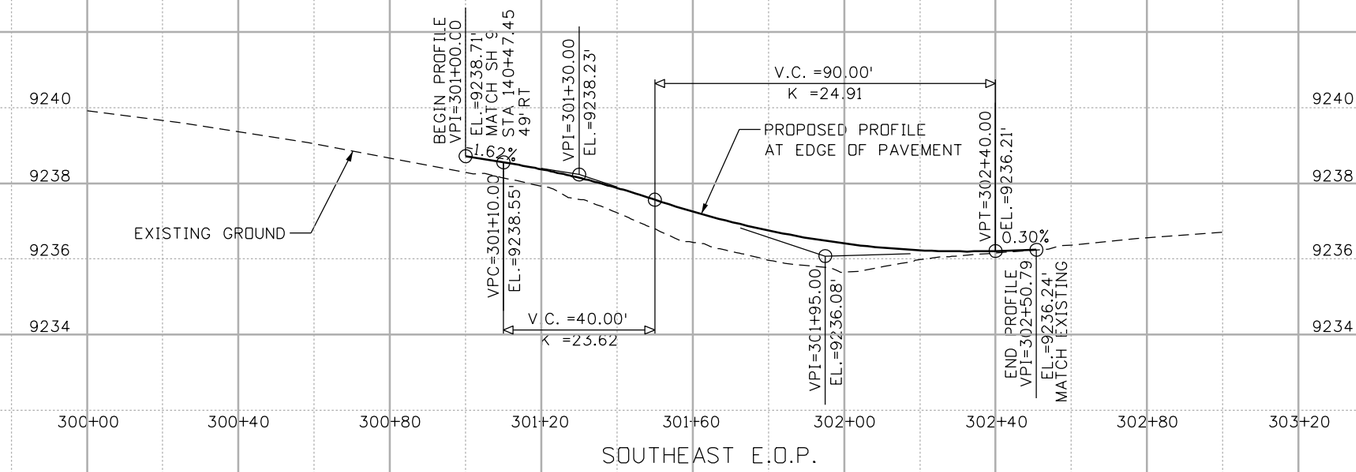


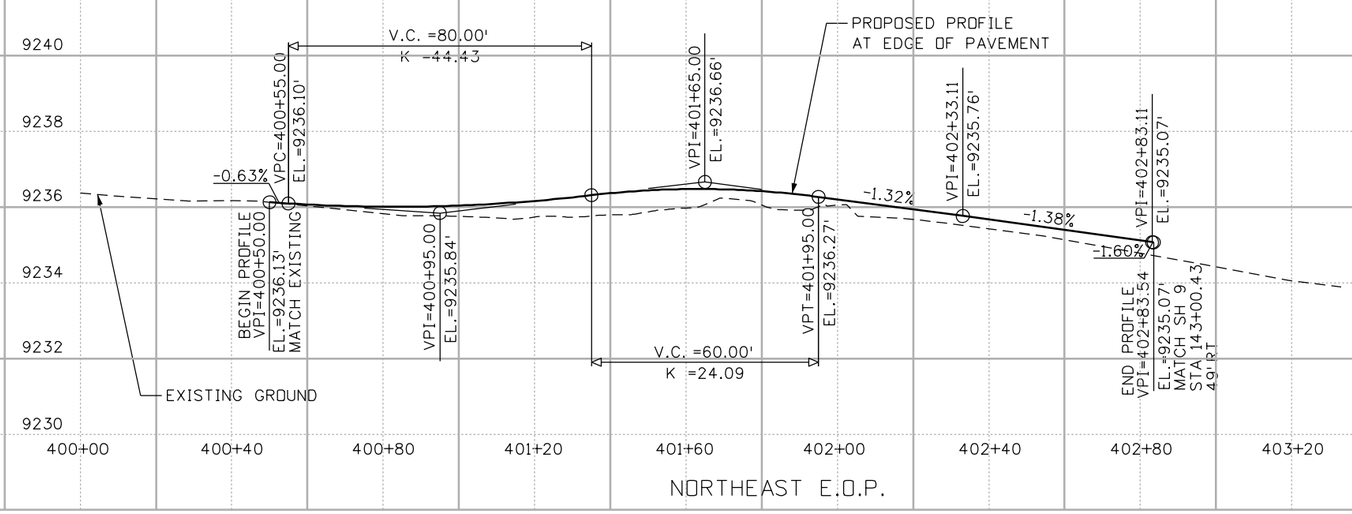


| | | | |
|---|---|---|---|
| Print Date: 9/26/2008 | Sheet Revisions | Colorado Department of Transportation | As Constructed |
| File Name: 14927ProfileSheetEastCurbs.dgn | Date: / Comments / Init. | Mountain Residency P.O. Box 399<br>Dumont, CO 80436<br>Phone: 303-512-5750 FAX: 303-512-5775 | No Revisions: |
| Horiz. Scale: 1:40 Vert. Scale: As Noted | R-X | Region 1 DCW | Revised: |
| Unit Information Unit Leader Initials | | | Void: |
| Stolfus & Associates, Inc.<br>5690 DTC Boulevard, Ste 101W<br>Greenwood Village, CO 80111 | | | |

| | | | |
|---|---|---|---|
| TIGER ROAD<br>EAST E.O.P. PROFILES | | | Project No./Code |
| Designer: MRH | Structure Numbers | | STA 0091-035 |
| Detailer: LIW | | | 16439 |
| Sheet Subset: ROADWAY | Subset Sheets: 13 of 22 | | Sheet Number 101 |

$PLOT_INFO$

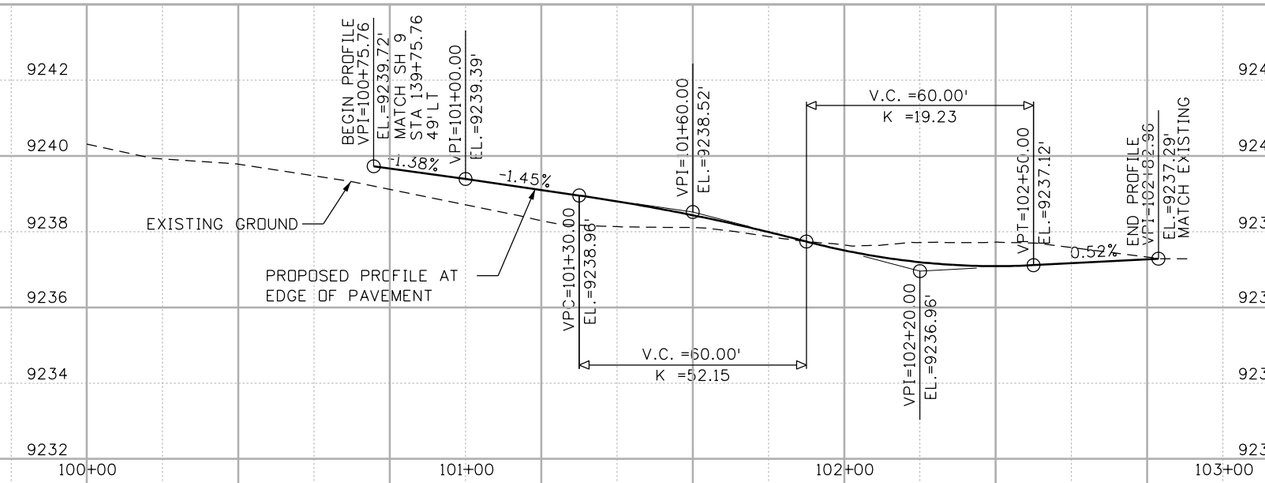


SOUTHWEST E.O.P.

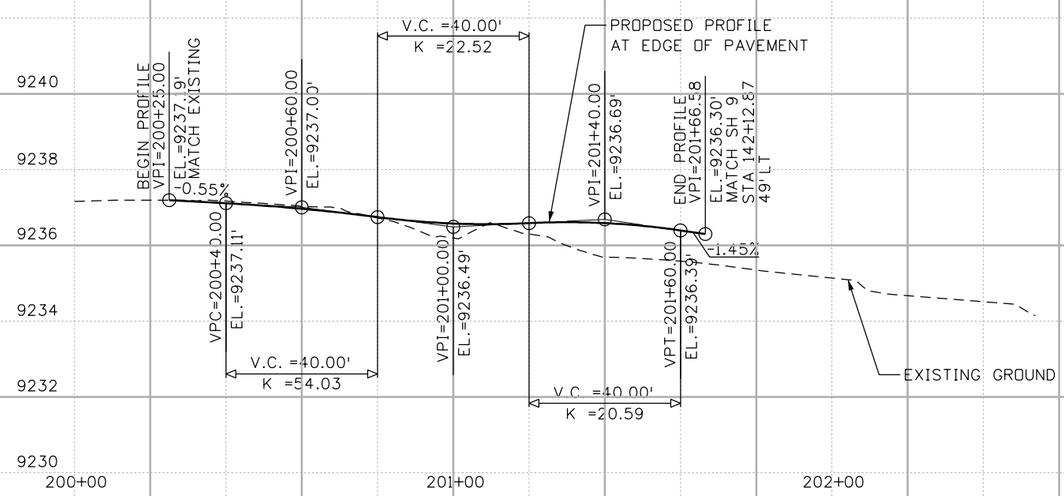


NORTHWEST E.O.P.

| | | | |
|---|---|---|---|
| Print Date: 1/14/2009 | Sheet Revisions | Colorado Department of Transportation | As Constructed |
| File Name: 14927ProfileSheetWestCurbs.dgn | Date: / Comments / Init. | DOT Department of Transportation | No Revisions: |
| Horiz. Scale: 1:40 Vert. Scale: As Noted | R-X | Mountain Residency P.O. Box 399<br>Dumont, CO 80436<br>Phone: 303-512-5750 FAX: 303-512-5775 | Revised: |
| Unit Information Unit Leader Initials | | Region 1 DCW | Void: |
| Stolfus & Associates, Inc.<br>5690 DTC Boulevard, Ste 101W<br>Greenwood Village, CO 80111 | | | |

| TIGER ROAD<br>WEST E.O.P. PROFILES | | | | Project No./Code |
|---|---|---|---|---|
| | | | | STA 0091-035 |
| Designer: MRH | Structure Numbers | | | 16439 |
| Detailer: LIW | | | | |
| Sheet Subset: ROADWAY | Subset Sheets: 14 of 22 | | | Sheet Number 102 |

$PLOT_INFO$

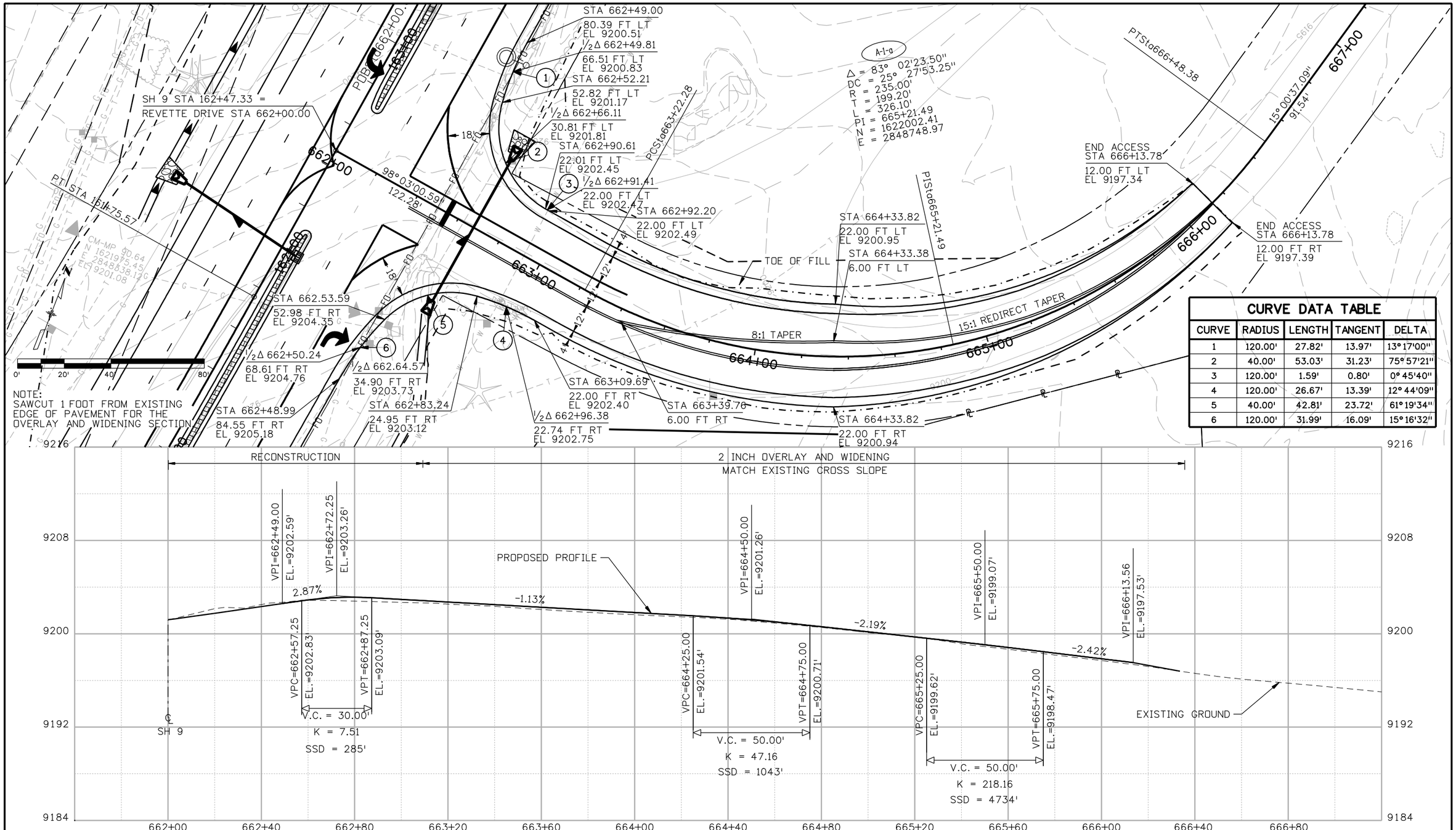


## CURVE DATA TABLE

| CURVE | RADIUS | LENGTH | TANGENT | DELTA |
|---|---|---|---|---|
| 1 | 120.00' | 27.82' | 13.97' | 13°17'00" |
| 2 | 40.00' | 53.03' | 31.23' | 75°57'21" |
| 3 | 120.00' | 1.59' | 0.80' | 0°45'40" |
| 4 | 120.00' | 26.67' | 13.39' | 12°44'09" |
| 5 | 40.00' | 42.81' | 23.72' | 61°19'34" |
| 6 | 120.00' | 31.99' | 16.09' | 15°16'32" |




| | | | |
|---|---|---|---|
| Print Date: 1/26/2009 | | | |
| File Name: 16439revette drive P&P.dgn | | | |
| Horiz. Scale: 1:40 | Vert. Scale: As Noted | | |
| Unit Information | Unit Leader Initials | | |

PBSJ 4601 DTC Boulevard, Suite 700
Denver, CO 80237
Phone: (303) 221-7275 Fax: (303) 221-7276

R-X

**Sheet Revisions**

| Date: | Comments | Init. |
|---|---|---|
| | | |
| | | |
| | | |
| | | |

Colorado Department of Transportation
DOT
Mountain Residency P.O. Box 399
Dumont, CO 80436
Phone: 303-512-5750 FAX: 303-512-5775
Region 1 DCW

As Constructed
No Revisions:
Revised:
Void:

REVETTE DRIVE
PLAN AND PROFILE

Designer: SLZ
Detailer: SLZ
Structure Numbers
Sheet Subset: ROADWAY
Subset Sheets: 15 of 22

Project No./Code
STA 0091-035
16439
Sheet Number 103

21698 9:04:54 AM S:\Tranproj\246220-05\14927\Consultants\Plot_Sets\SHELF\16439revette drive P&P.dgn

## CURVE DATA TABLE

| CURVE | RADIUS | LENGTH | TANGENT | DELTA |
|---|---|---|---|---|
| 1 | 50.00' | 78.11' | 49.58' | 89° 30'43" |
| 2 | 60.00' | 93.66' | 59.41' | 89° 26'18" |

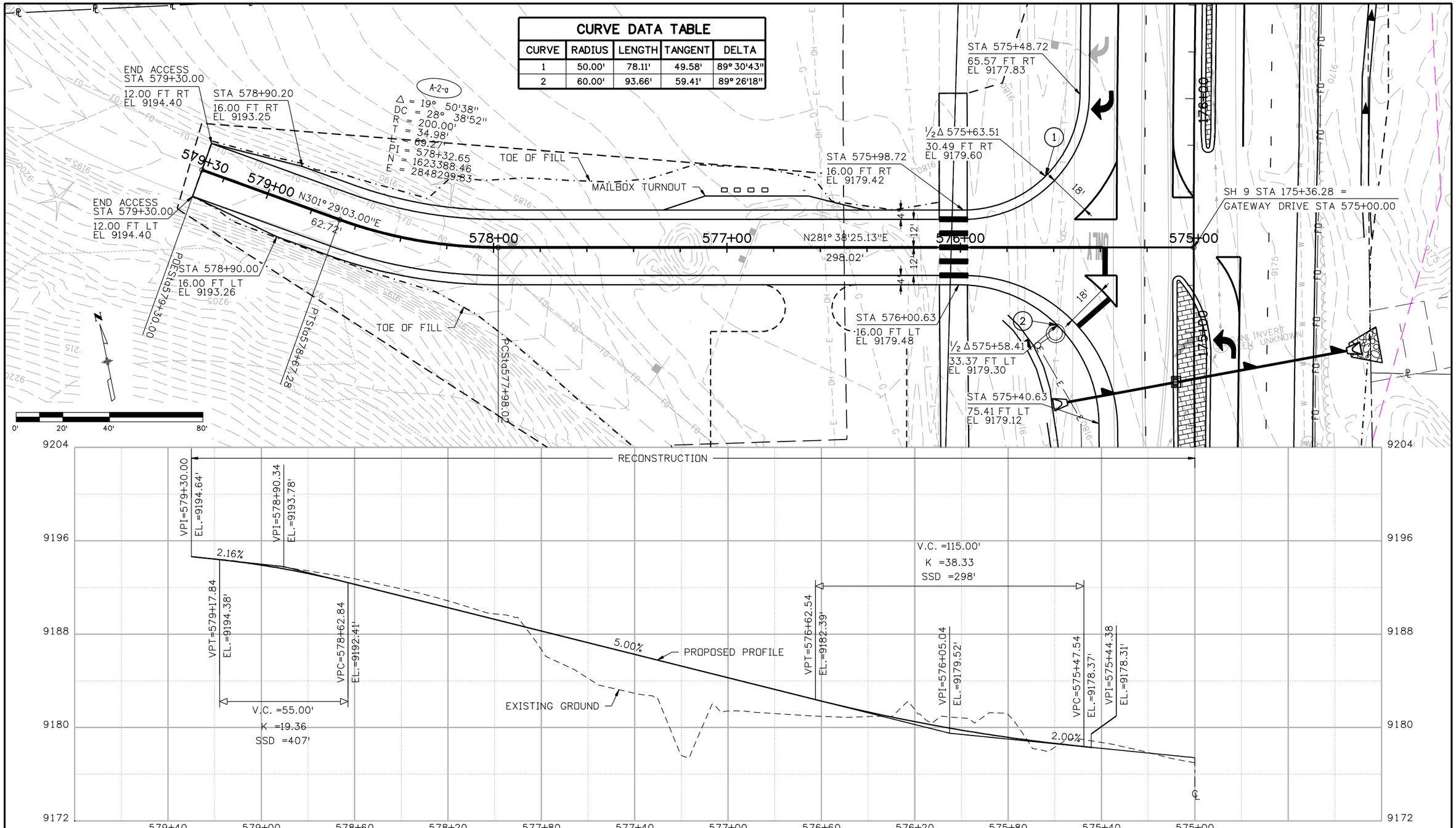


| | | | |
|---|---|---|---|
| Print Date: 1/26/2009 | Sheet Revisions | Colorado Department of Transportation | As Constructed |
| File Name: 16439Gateway Drive P&P.dgn | Date: / Comments / Init. | DOT — Mountain Residency P.O. Box 399, Dumont, CO 80436, Phone: 303-512-5750 FAX: 303-512-5775 | No Revisions: |
| Horiz. Scale: 1:40 Vert. Scale: As Noted | R-X | Region 1 DCW | Revised: |
| Unit Information Unit Leader Initials | | | Void: |
| PBSJ 4601 DTC Boulevard, Suite 700, Denver, CO 80237, Phone: (303) 221-7275 Fax: (303) 221-7276 | | | |

| GATEWAY DRIVE PLAN AND PROFILE | | | Project No./Code |
|---|---|---|---|
| Designer: SLZ | Structure Numbers | | STA 0091-035 |
| Detailer: SLZ | | | 16439 |
| Sheet Subset: ROADWAY | Subset Sheets: 16 of 22 | | Sheet Number 104 |

21698 9:05:27 AM S:\Tranproj\246220-05\14927\Consultants\Plot_Sets\SHELF\16439Gateway Drive P&P.dgn

NOTES:

1. EXISTING ONSITE BOULDERS SHALL BE RELOCATED TO DELINEATE PARKING AREA ENTRANCE AND PROTECT ELECTRICAL POLE, TELEPHONE PEDESTAL, AND INFORMATION SIGN. COORDINATE PLACEMENT WITH THE ENGINEER. MAINTAIN MINIMUM DISTANCE OF SIX FEET FROM GATEWAY DRIVE EDGE OF PAVEMENT. PAYMENT FOR RELOCATING BOULDERS WILL BE MADE UNDER ITEM 213, LANDSCAPE BOULDER (SPECIAL). IT IS ESTIMATED THAT 11 EACH LANDSCAPE BOULDER (SPECIAL) WILL BE REQUIRED FOR THE PROJECT.
2. PAYMENT FOR RELOCATION OF EXISTING MAILBOX AND NEWSPAPER STRUCTURES SHALL BE MADE UNDER ITEM 210, RESET MAILBOX STRUCTURE. IT IS ESTIMATED THAT SEVEN EACH RESET MAILBOX STRUCTURE WILL BE REQUIRED FOR THE PROJECT.
3. PARKING AREA SHALL BE SURFACED WITH EXISTING GATEWAY DRIVE MATERIAL. SURFACING SHALL BE SPREAD AT A UNIFORM DEPTH. SURFACING PARKING AREA SHALL NOT BE PAID FOR SEPARATELY, BUT INCLUDED IN THE WORK.
4. THE EXISTING TRAIL HEAD SIGN SHALL BE RELOCATED AS DESIGNATED BY THE U.S. FOREST SERVICE.

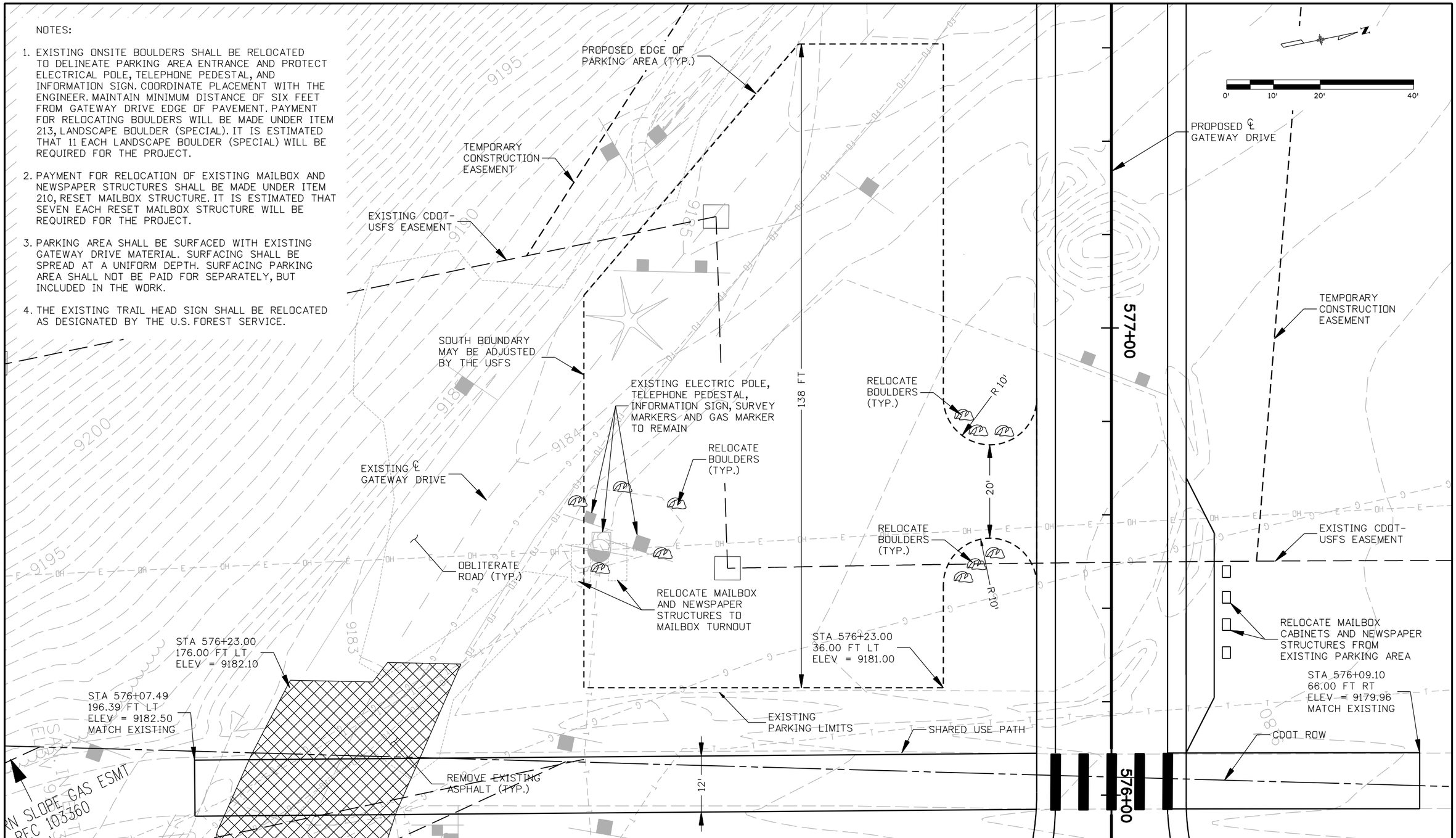


| | | | |
|---|---|---|---|
| Print Date: 1/26/2009 | Sheet Revisions | Colorado Department of Transportation | As Constructed |
| File Name: 16439Gateway Parking Area-UPDATED.dgn | Date: / Comments / Init. | Mountain Residency P.O. Box 399, Dumont, CO 80436, Phone: 303-512-5750 FAX: 303-512-5775 | No Revisions: |
| Horiz. Scale: 1:20 Vert. Scale: As Noted | | Region 1 DCW | Revised: |
| Unit Information Unit Leader Initials | | | Void: |
| PBSJ 4601 DTC Boulevard, Suite 700, Denver, CO 80237, Phone: (303) 221-7275 Fax: (303) 221-7276 | | | |

| GATEWAY DRIVE PARKING AREA | | | Project No./Code |
|---|---|---|---|
| Designer: SLZ | Structure Numbers | | STA 0091-035 |
| Detailer: SLZ | | | 16439 |
| Sheet Subset: ROADWAY | Subset Sheets: 17 of 22 | | Sheet Number 105 |

21698 9:06:11 AM S:\Tranproj\246220-05\14927\Consultants\Design\Working\16439Gateway Parking Area-UPDATED.dgn

| CURVE DATA TABLE | | | | |
|---|---|---|---|---|
| CURVE | RADIUS | LENGTH | TANGENT | DELTA |
| 1 | 25.00' | 44.47' | 30.82' | 101° 54'47" |
| 2 | 25.00' | 37.78' | 23.56' | 86° 35'31" |

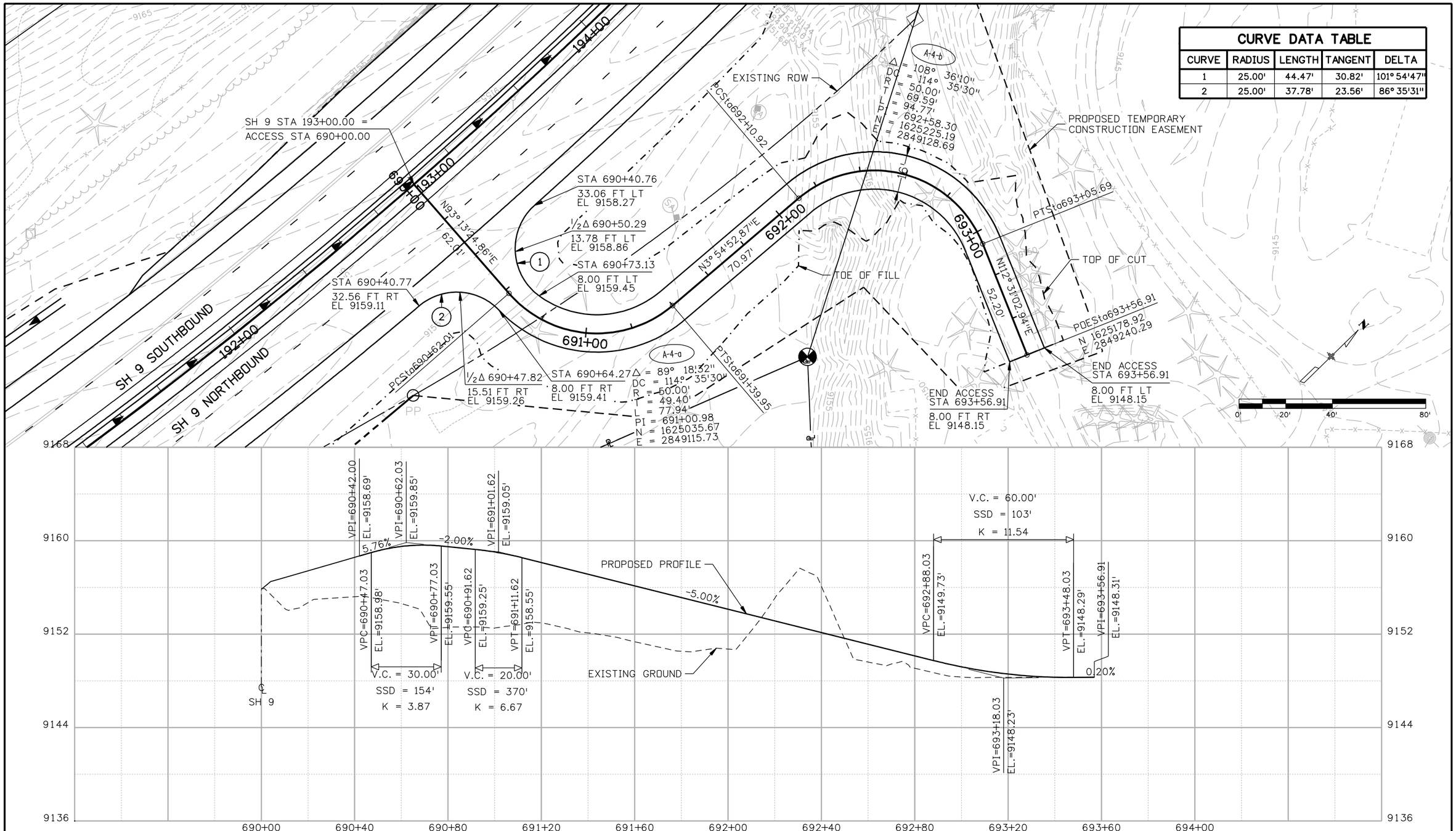


| | | | |
|---|---|---|---|
| Print Date: 1/26/2009 | Sheet Revisions | Colorado Department of Transportation | As Constructed |
| File Name: 16439access p&p01.dgn | Date: / Comments / Init. | DOT — Mountain Residency P.O. Box 399, Dumont, CO 80436, Phone: 303-512-5750 FAX: 303-512-5775 | No Revisions: |
| Horiz. Scale: 1:40 Vert. Scale: As Noted | R-X | Region 1 DCW | Revised: |
| Unit Information Unit Leader Initials | | | Void: |
| PBSJ 4601 DTC Boulevard, Suite 700, Denver, CO 80237, Phone: (303) 221-7275 Fax: (303) 221-7276 | | | |

ACCESS PLAN AND PROFILE
STA 193+00

| | | | |
|---|---|---|---|
| Designer: | SLZ | Structure Numbers | |
| Detailer: | SLZ | | |
| Sheet Subset: | ROADWAY | Subset Sheets: | 18 of 22 |

Project No./Code: STA 0091-035
16439
Sheet Number 106

21698 9:06:52 AM S:\Tranproj\246220-05\14927\Consultants\Plot_Sets\SHELF\16439access p&p01.dgn

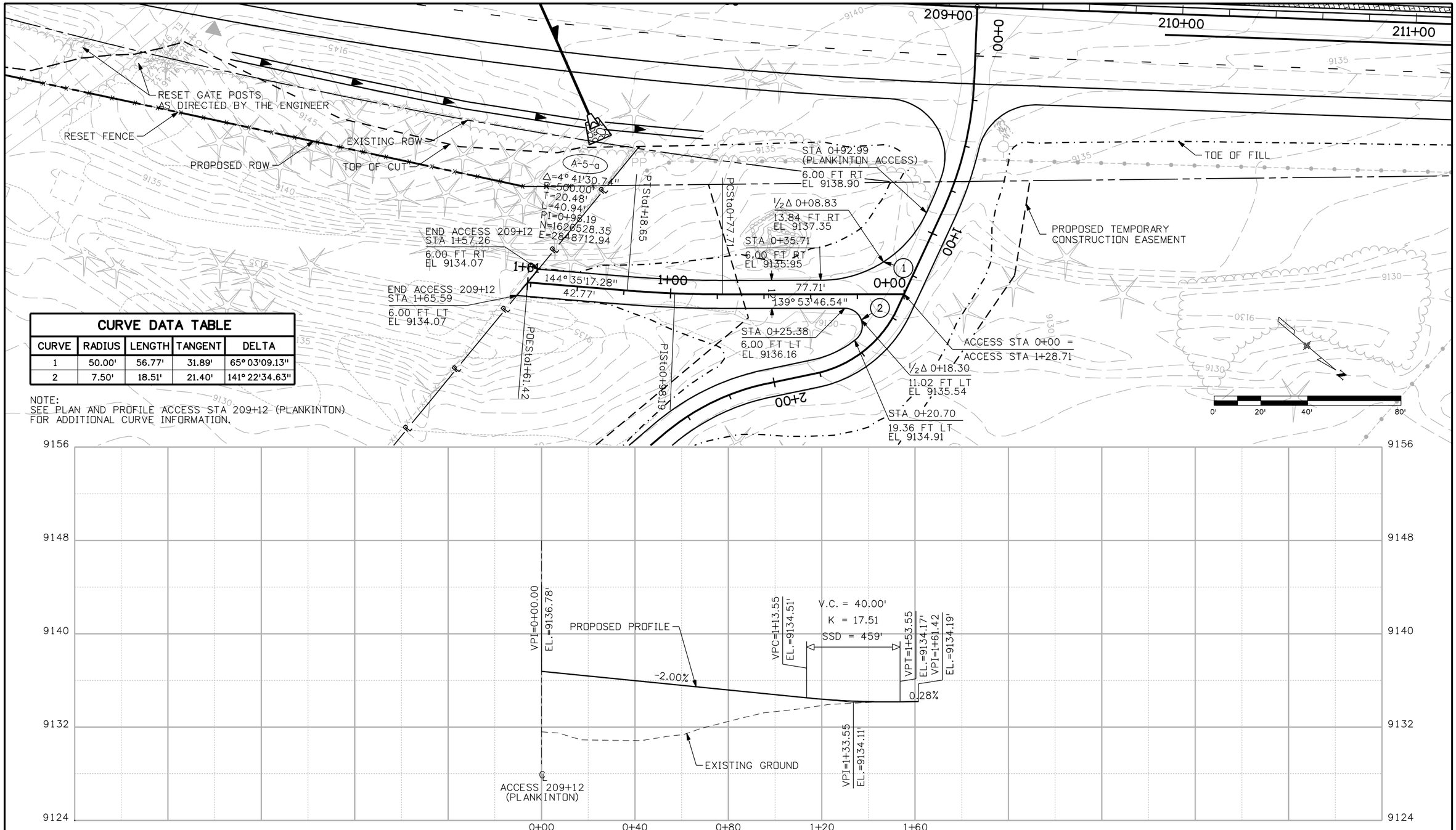


| CURVE DATA TABLE | | | | |
|---|---|---|---|---|
| CURVE | RADIUS | LENGTH | TANGENT | DELTA |
| 1 | 50.00' | 56.77' | 31.89' | 65° 03'09.13" |
| 2 | 7.50' | 18.51' | 21.40' | 141° 22'34.63" |

NOTE:
SEE PLAN AND PROFILE ACCESS STA 209+12 (PLANKINTON) FOR ADDITIONAL CURVE INFORMATION.

Print Date: 1/26/2009
File Name: 16439access p&p02.dgn
Horiz. Scale: 1:40 Vert. Scale: As Noted
Unit Information Unit Leader Initials

PBSJ 4601 DTC Boulevard, Suite 700
Denver, CO 80237
Phone: (303) 221-7275 Fax: (303) 221-7276

R-X

Sheet Revisions

| Date: | Comments | Init. |
|---|---|---|
| | | |
| | | |
| | | |

Colorado Department of Transportation
DOT
Mountain Residency P.O. Box 399
Dumont, CO 80436
Phone: 303-512-5750 FAX: 303-512-5775
Region 1 DCW

As Constructed
No Revisions:
Revised:
Void:

ACCESS PLAN AND PROFILE
STA 209+12 (HERNOR)

Designer: SLZ
Detailer: SLZ
Structure Numbers
Sheet Subset: ROADWAY
Subset Sheets: 19 of 22

Project No./Code
STA 0091-035
16439
Sheet Number 107

21698 9:07:19 AM S:\Tranproj\246220-05\14927\Consultants\Plot_Sets\SHELF\16439access p&p02.dgn

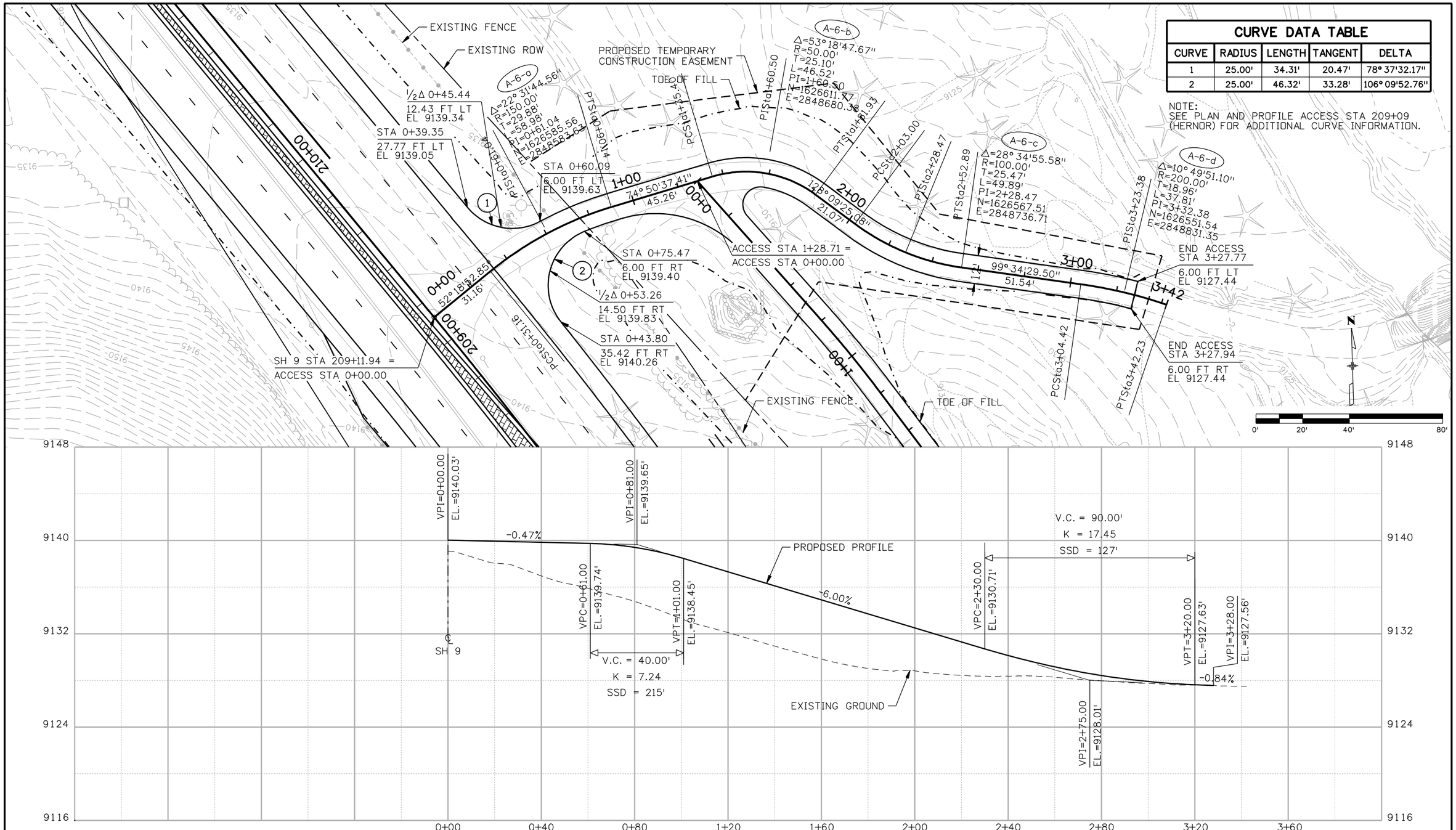


## CURVE DATA TABLE

| CURVE | RADIUS | LENGTH | TANGENT | DELTA |
|---|---|---|---|---|
| 1 | 25.00' | 34.31' | 20.47' | 78° 37'32.17" |
| 2 | 25.00' | 46.32' | 33.28' | 106° 09'52.76" |

NOTE:
SEE PLAN AND PROFILE ACCESS STA 209+09 (HERNOR) FOR ADDITIONAL CURVE INFORMATION.

Print Date: 1/26/2009
File Name: 16439access p&p03.dgn
Horiz. Scale: 1:40 Vert. Scale: As Noted
Unit Information Unit Leader Initials

PBSJ 4601 DTC Boulevard, Suite 700
Denver, CO 80237
Phone: (303) 221-7275 Fax: (303) 221-7276

| Sheet Revisions | | |
|---|---|---|
| Date: | Comments | Init. |
| | | |
| | | |
| | | |
| | | |

Colorado Department of Transportation
DOT
Mountain Residency P.O. Box 399
Dumont, CO 80436
Phone: 303-512-5750 FAX: 303-512-5775
Region 1 DCW

As Constructed
No Revisions:
Revised:
Void:

# ACCESS PLAN AND PROFILE STA 209+12 (PLANKINTON)

Designer: SLZ
Detailer: SLZ
Structure Numbers
Sheet Subset: ROADWAY
Subset Sheets: 20 of 22

Project No./Code
STA 0091-035
16439
Sheet Number 108

21698 9:07:44 AM S:\Tranproj\246220-05\14927\Consultants\Plot_Sets\SHELF\16439access p&p03.dgn

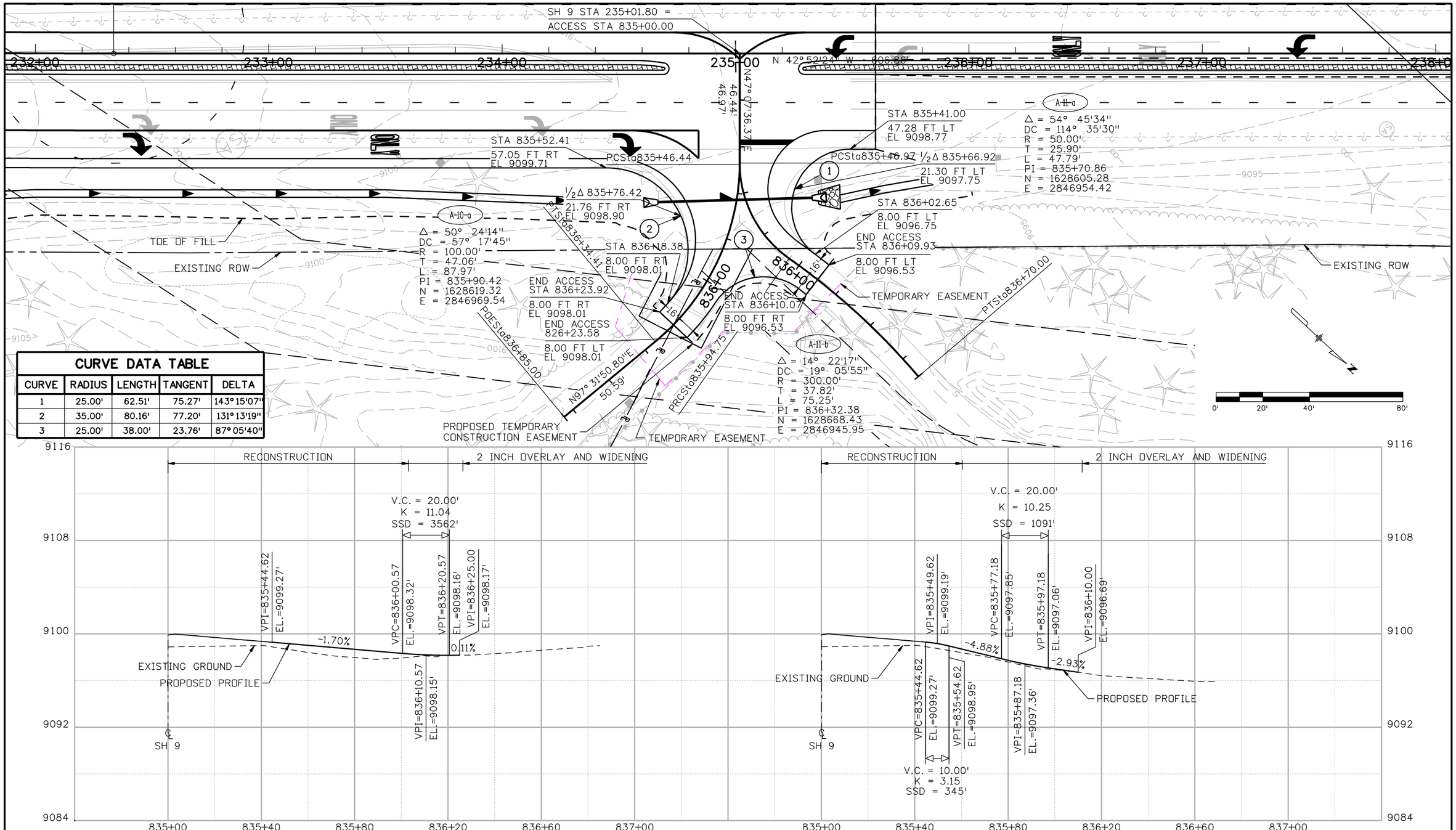


## CURVE DATA TABLE

| CURVE | RADIUS | LENGTH | TANGENT | DELTA |
|---|---|---|---|---|
| 1 | 25.00' | 62.51' | 75.27' | 143°15'07" |
| 2 | 35.00' | 80.16' | 77.20' | 131°13'19" |
| 3 | 25.00' | 38.00' | 23.76' | 87°05'40" |

Print Date: 1/26/2009
File Name: 16439access p&p04.dgn
Horiz. Scale: 1:40 Vert. Scale: As Noted
Unit Information Unit Leader Initials

PBSJ 4601 DTC Boulevard, Suite 700
Denver, CO 80237
Phone: (303) 221-7275 Fax: (303) 221-7276

Sheet Revisions

| Date: | Comments | Init. |
|---|---|---|
| | | |
| | | |
| | | |

Colorado Department of Transportation
DOT
Mountain Residency P.O. Box 399
Dumont, CO 80436
Phone: 303-512-5750 FAX: 303-512-5775
Region 1 DCW

As Constructed
No Revisions:
Revised:
Void:

ACCESS PLAN AND PROFILE
STA 235+02 AGAPE OUTPOST

Designer: SLZ
Detailer: SLZ
Structure Numbers
Sheet Subset: ROADWAY
Subset Sheets: 21 of 22

Project No./Code
STA 0091-035
16439
Sheet Number 109

21698 9:08:10 AM S:\Tranproj\246220-05\14927\Consultants\Plot_Sets\SHELF\16439access p&p04.dgn

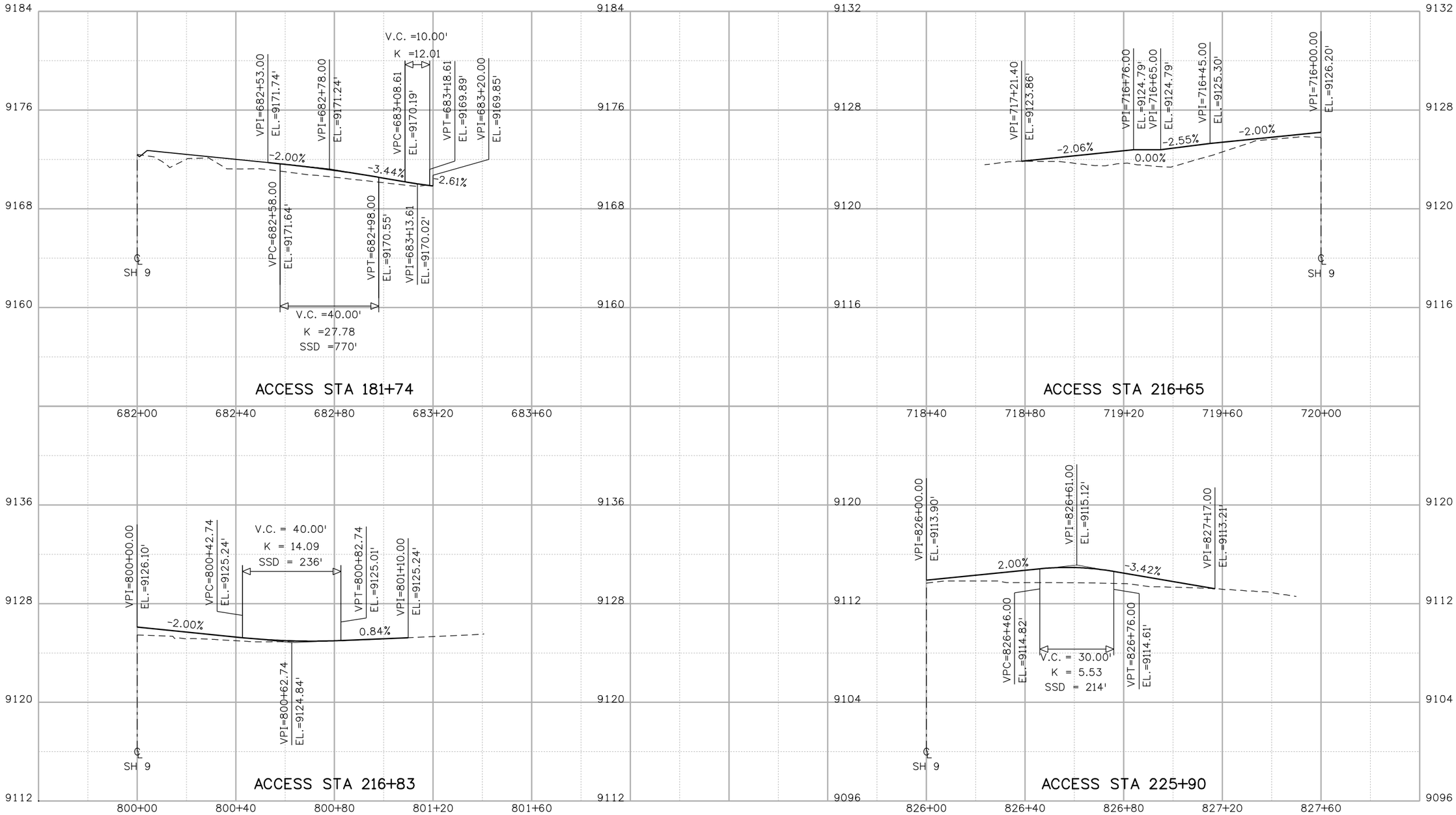


| | | | |
|---|---|---|---|
| Print Date: 1/26/2009 | | Sheet Revisions | |
| File Name: 16439access profiles01.dgn | | Date: | Comments | Init. |
| Horiz. Scale: 1:40 Vert. Scale: As Noted | R-X | | | |
| Unit Information Unit Leader Initials | | | | |

PBSJ 4601 DTC Boulevard, Suite 700 Denver, CO 80237 Phone: (303) 221-7275 Fax: (303) 221-7276

Colorado Department of Transportation
DOT DEPARTMENT OF TRANSPORTATION
Mountain Residency P.O. Box 399 Dumont, CO 80436 Phone: 303-512-5750 FAX: 303-512-5775
Region 1 DCW

As Constructed
No Revisions:
Revised:
Void:

ACCESS PROFILES

| | | | |
|---|---|---|---|
| Designer: | SLZ | Structure Numbers | |
| Detailer: | SLZ | | |
| Sheet Subset: | ROADWAY | Subset Sheets: | 22 of 22 |

Project No./Code
STA 0091-035
16439
Sheet Number 110

21698 9:08:45 AM S:\Tranproj\246220-05\14927\Consultants\Plot_Sets\SHELF\16439access profiles01.dgn

## TYPICAL SECTION NOTES

▲ Break points in slopes and in bottom of ditches shall be rounded during construction for a pleasing appearance.

Cross Slope: For recreational pathways, the high point will begin at the outside edge of the pavement and the pavement sloped toward the cut side of the recreational pathway on a 2% slope. Where recreational pathways are constructed on fill sections, slope direction will be to side of least erosion potential, or as otherwise directed by the engineer or designated representative.

○ Vertical alignment points.

The gradient and width of roadway ditches, and excavation and embankment slope rates may be adjusted by the engineer to assure adequate drainage and slope stability. All adjustments shall be coordinated with the engineer prior to implementation.

A soil sterilant is required to be placed between the aggregate base course surface and the asphaltic concrete pavement to prevent vegetation from growing through the pavement.

| DESIGN CRITERIA | |
|---|---|
| DESIGN SPEED | 20 MPH |
| MINIMUM SEPARATION FROM SH 9 | 18' |
| CLEAR ZONE FROM OBSTRUCTIONS | 5' |
| MINIMUM HORIZONTAL RADIUS | 100' |
| MINIMUM PROFILE RADIUS | 0.20% |
| MAXIMUM PROFILE GRADE | 5%* |
| MINIMUM VERTICAL CLEARANCE | 10' |

*STEEPER GRADES PERMISSIBLE, SEE AASHTO 1999 GUIDE FOR DEVELOPMENT OF BICYCLE FACILITIES, PG 39 WHEN GRADES EXCEED 5%

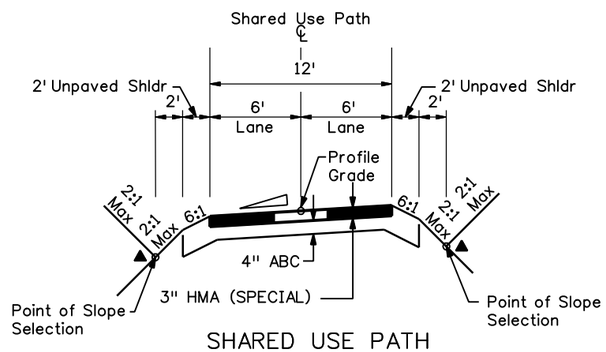


SHARED USE PATH
TYPICAL SECTION NO.1

Sta 6000+81.77 to Sta 6005+00.00
Sta 7000+00.00 to Sta 7019+77.89

## SHARED USE PATH - SUPERELEVATION TABLE

| Station | Left Rate | Mode | Right Rate | Mode |
|---|---|---|---|---|
| 6000+81.77 | -2.00% | Linear | -2.00% | Linear |
| 6005+00.00 | -2.00% | Linear | -2.00% | Linear |
| 7000+00.00 | +1.55% | Linear | -1.55% | Linear |
| 7000+45.41 | -2.00% | Linear | +2.00% | Linear |
| 7000+51.50 | -2.50% | Linear | +2.50% | Linear |
| 7000+67.90 | -2.50% | Linear | +2.50% | Linear |
| 7000+73.99 | -2.00% | Linear | +2.00% | Linear |
| 7001+22.88 | +2.00% | Linear | -2.00% | Linear |
| 7001+28.97 | +2.50% | Linear | -2.50% | Linear |
| 7001+60.58 | +2.50% | Linear | -2.50% | Linear |
| 7001+66.67 | +2.00% | Linear | -2.00% | Linear |
| 7017+85.78 | +2.00% | Linear | -2.00% | Linear |
| 7018+34.42 | -2.00% | Linear | +2.00% | Linear |
| 7018+52.67 | -3.50% | Linear | +3.50% | Linear |
| 7019+23.63 | -3.50% | Linear | +3.50% | Linear |
| 7019+41.88 | -2.00% | Linear | +2.00% | Linear |
| 7019+77.89 | -1.55% | Linear | +1.55% | Linear |

TRANSITIONS TO AND FROM CHANGES IN CROSS SLOPE SHALL BE ACCOMPLISHED AT A RATE OF 0.001FT/FT.

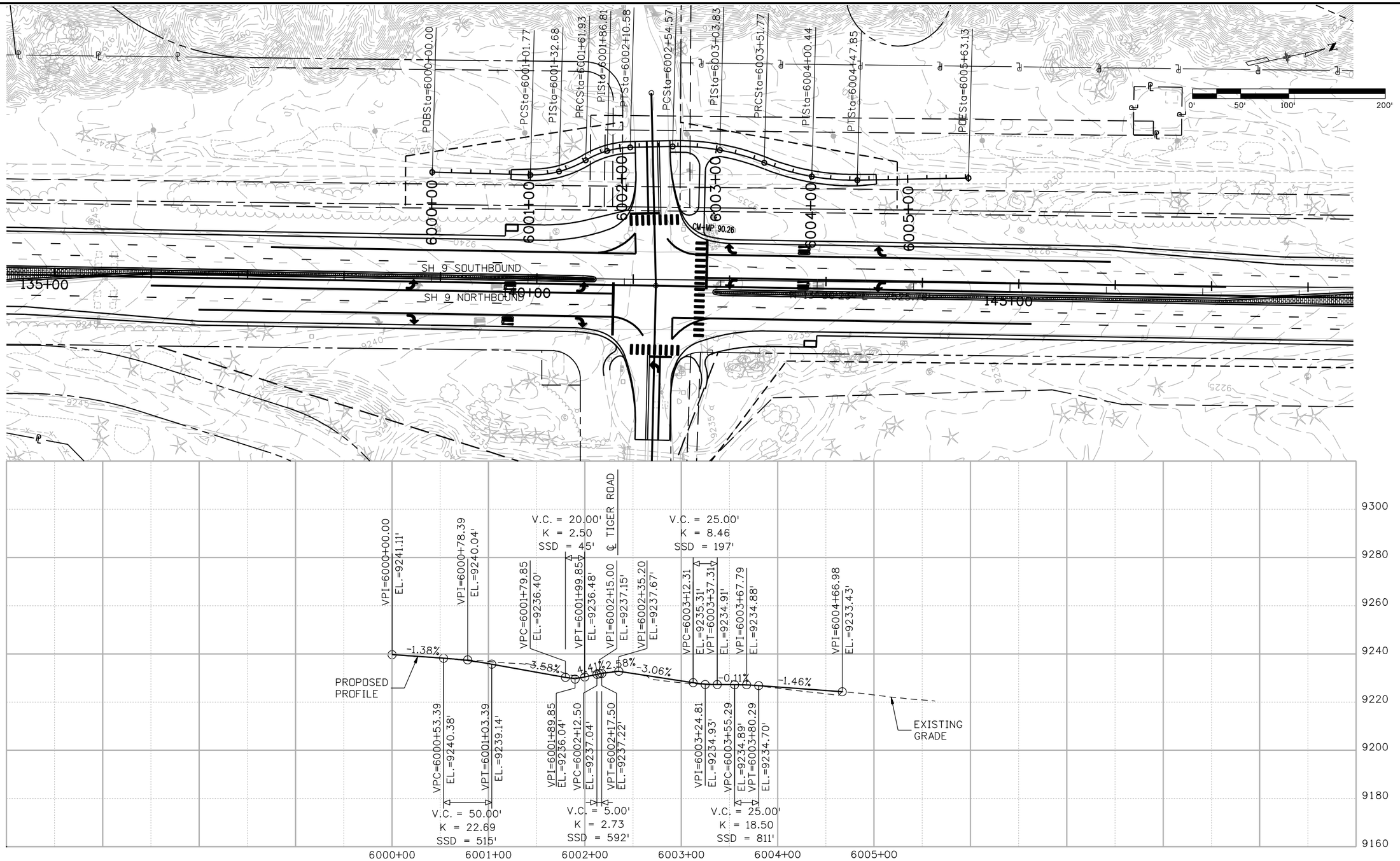


Print Date: 1/26/2009
File Name: 16439SharedUsePath_P&P_02.dgn
Horiz. Scale: 1:100 Vert. Scale: As Noted
Unit Information Unit Leader Initials

PBSJ 4601 DTC Boulevard, Suite 700
Denver, CO 80237
Phone: (303) 221-7275 Fax: (303) 221-7276

R-X

| Sheet Revisions | | |
|---|---|---|
| Date: | Comments | Init. |
| | | |
| | | |
| | | |

Colorado Department of Transportation
DOT
Mountain Residency P.O. Box 399
Dumont, CO 80436
Phone: 303-512-5750 FAX: 303-512-5775
Region 1 DCW

As Constructed
No Revisions:
Revised:
Void:

SHARED USE PATH PLAN & PROFILE
STA 6000+00 TO 6004+66.98

| | | | |
|---|---|---|---|
| Designer: | SRB | Structure Numbers | |
| Detailer: | SRB | | |
| Sheet Subset: | Path | Subset Sheets: | 2 of 3 |

Project No./Code
STA 0091-035
16439
Sheet Number 112

21698 9:10:39 AM S:\Tranproj\246220-05\14927\Consultants\Plot_Sets\SHELF\16439SharedUsePath_P&P_02.dgn

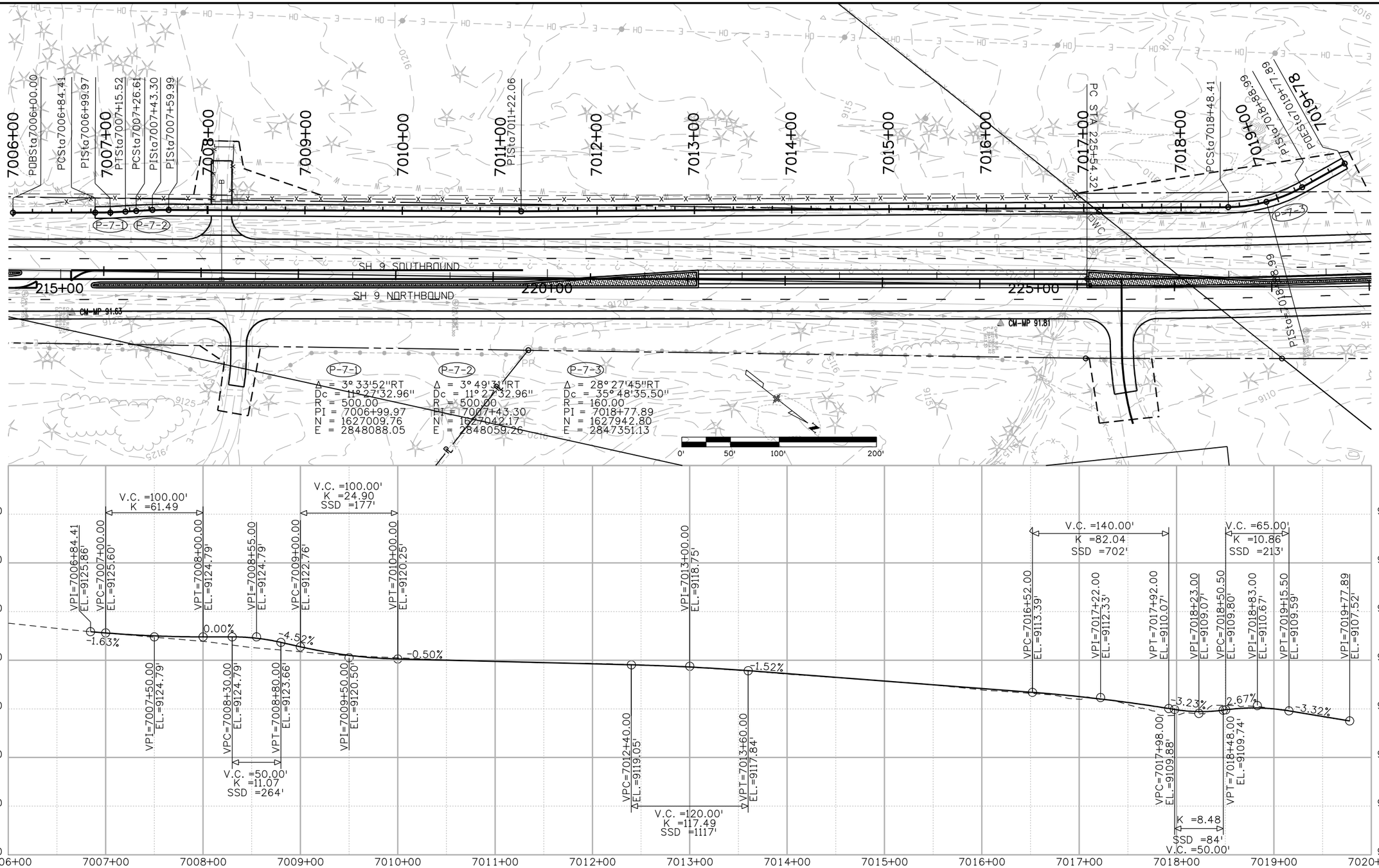


| | | | |
|---|---|---|---|
| Print Date: 1/26/2009 | | | |
| File Name: 16439SharedUsePath_P&P_01.dgn | | | |
| Horiz. Scale: 1:100 | Vert. Scale: As Noted | | |
| Unit Information | Unit Leader Initials | | |

PBSJ 4601 DTC Boulevard, Suite 700
Denver, CO 80237
Phone: (303) 221-7275 Fax: (303) 221-7276

R-X

**Sheet Revisions**

| Date: | Comments | Init. |
|---|---|---|
| | | |
| | | |
| | | |
| | | |

Colorado Department of Transportation
DOT
DEPARTMENT OF TRANSPORTATION
Mountain Residency P.O. Box 399
Dumont, CO 80436
Phone: 303-512-5750 FAX: 303-512-5775
Region 1 DCW

As Constructed
No Revisions:
Revised:
Void:

SHARED USE PATH PLAN & PROFILE
STA 7006+00 TO STA 7019+77.89

| | | | |
|---|---|---|---|
| Designer: | SRB | Structure Numbers | |
| Detailer: | SRB | | |
| Sheet Subset: | Path | Subset Sheets: | 3 of 3 |

Project No./Code
STA 0091-035
16439
Sheet Number 113

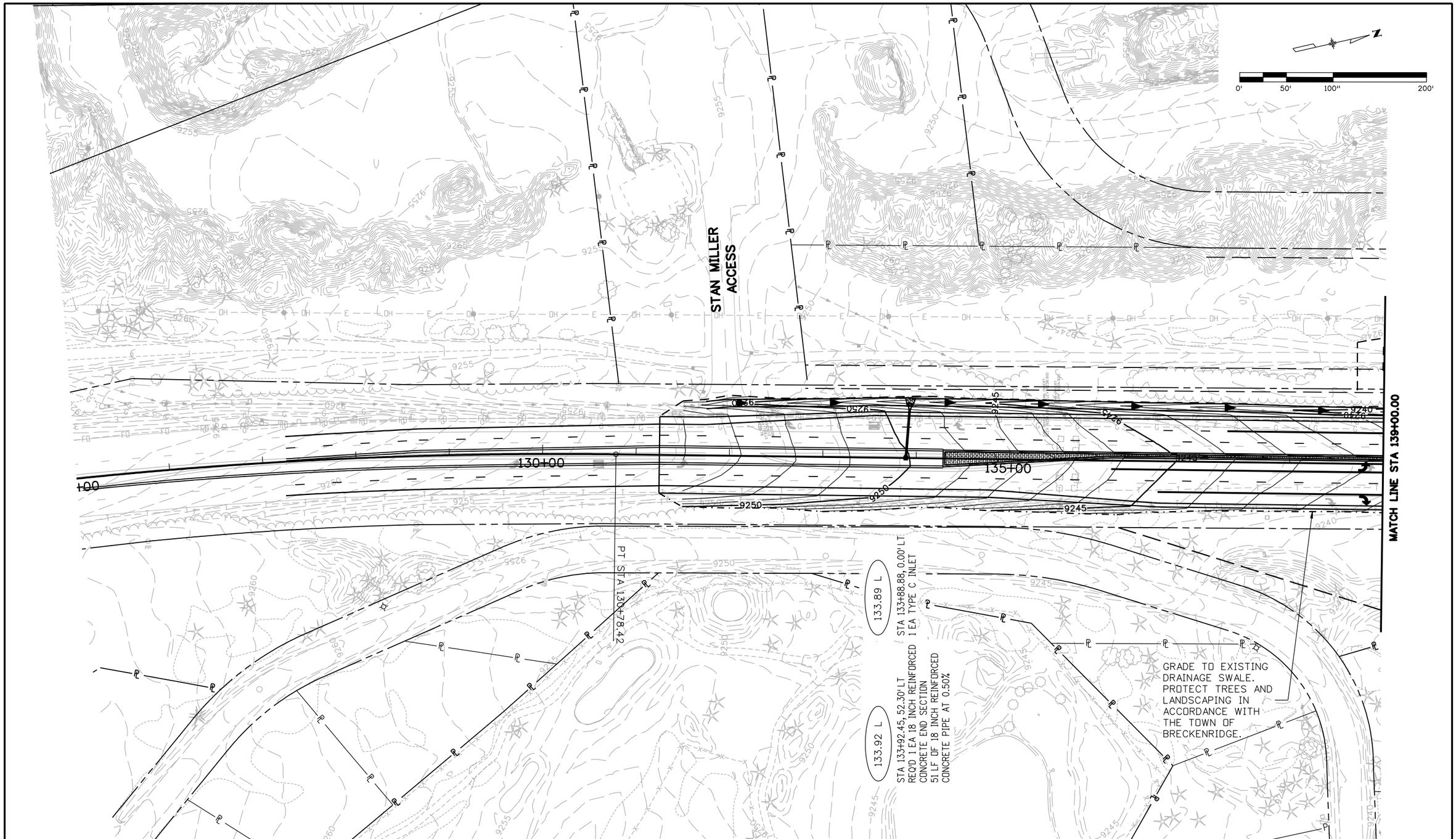


| | | | |
|---|---|---|---|
| Print Date: 1/26/2009 | Sheet Revisions | Colorado Department of Transportation | As Constructed |
| File Name: 16439Drainage01.dgn | Date: / Comments / Init. | Mountain Residency P.O. Box 399<br>Dumont, CO 80436<br>Phone: 303-512-5750 FAX: 303-512-5775 | No Revisions: |
| Horiz. Scale: 1:100 Vert. Scale: As Noted | | Region 1 DCW | Revised: |
| Unit Information Unit Leader Initials | | | Void: |
| PBSJ 4601 DTC Boulevard, Suite 700<br>Denver, CO 80237<br>Phone: (303) 221-7275 Fax: (303) 221-7276 | | | |

| | | | |
|---|---|---|---|
| SH 9 DRAINAGE & GRADING PLAN<br>STA 125+00 TO STA 139+00 | | | Project No./Code |
| Designer: SLZ | Structure Numbers | | STA 0091-035 |
| Detailer: SLZ | | | 16439 |
| Sheet Subset: DRAINAGE | Subset Sheets: 1 of 21 | | Sheet Number 114 |

21698 9:11:53 AM S:\Tranproj\246220-05\14927\Consultants\Plot_Sets\SHELF\16439Drainage01.dgn

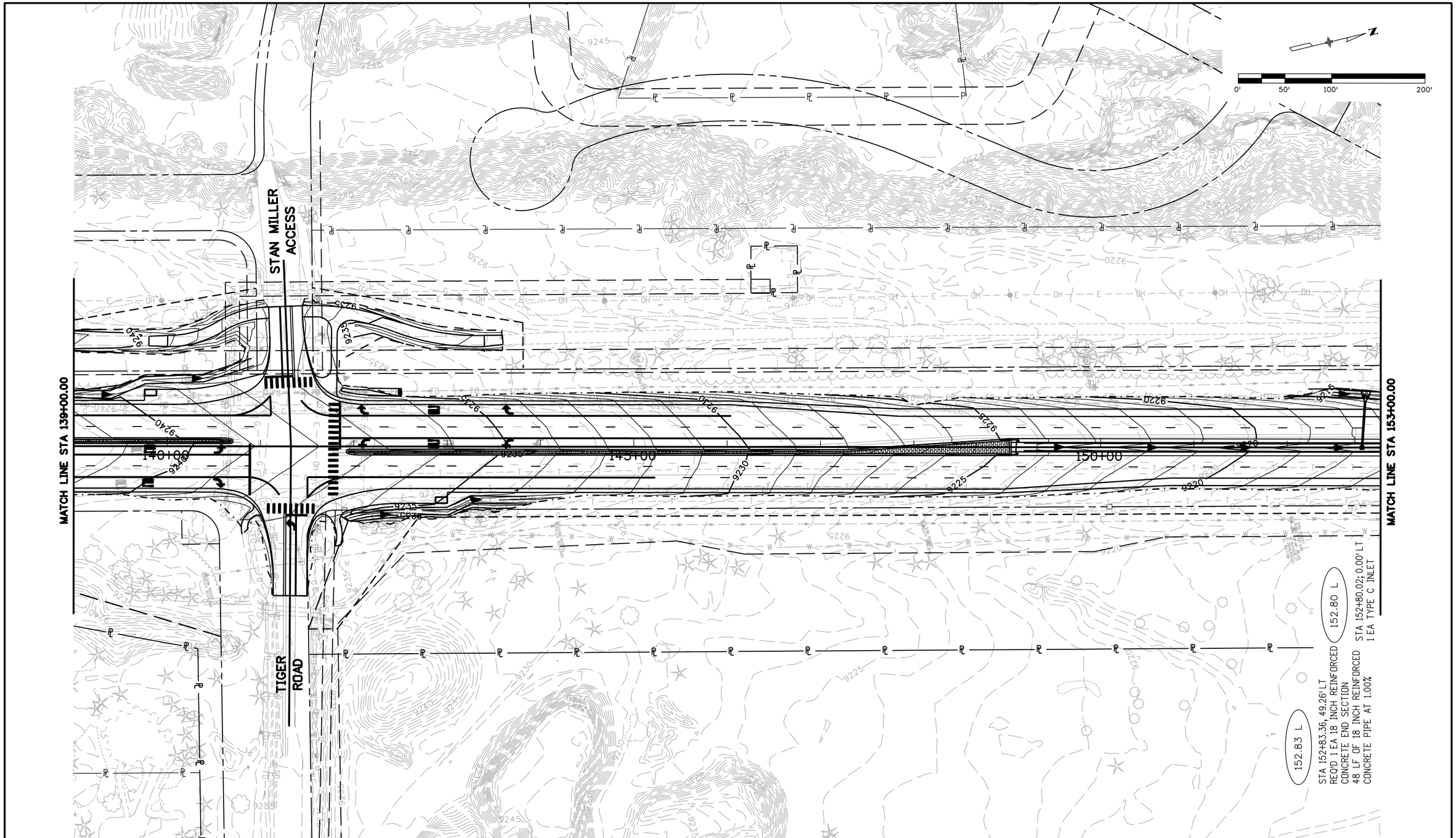


Print Date: 1/26/2009
File Name: 16439Drainage02.dgn
Horiz. Scale: 1:100 Vert. Scale: As Noted
Unit Information Unit Leader Initials

PBSJ 4601 DTC Boulevard, Suite 700
Denver, CO 80237
Phone: (303) 221-7275 Fax: (303) 221-7276

| Sheet Revisions | | |
|---|---|---|
| Date: | Comments | Init. |
| | | |
| | | |
| | | |
| | | |

Colorado Department of Transportation
DOT DEPARTMENT OF TRANSPORTATION
Mountain Residency P.O. Box 399
Dumont, CO 80436
Phone: 303-512-5750 FAX: 303-512-5775
Region 1 DCW

As Constructed
No Revisions:
Revised:
Void:

SH 9 DRAINAGE & GRADING PLAN
STA 139+00 TO STA 153+00

Designer: SLZ
Detailer: SLZ
Structure Numbers
Sheet Subset: DRAINAGE
Subset Sheets: 2 of 21

Project No./Code
STA 0091-035
16439
Sheet Number 115

21698 9:12:20 AM S:\Tranproj\246220-05\14927\Consultants\Plot_Sets\SHELF\16439Drainage02.dgn

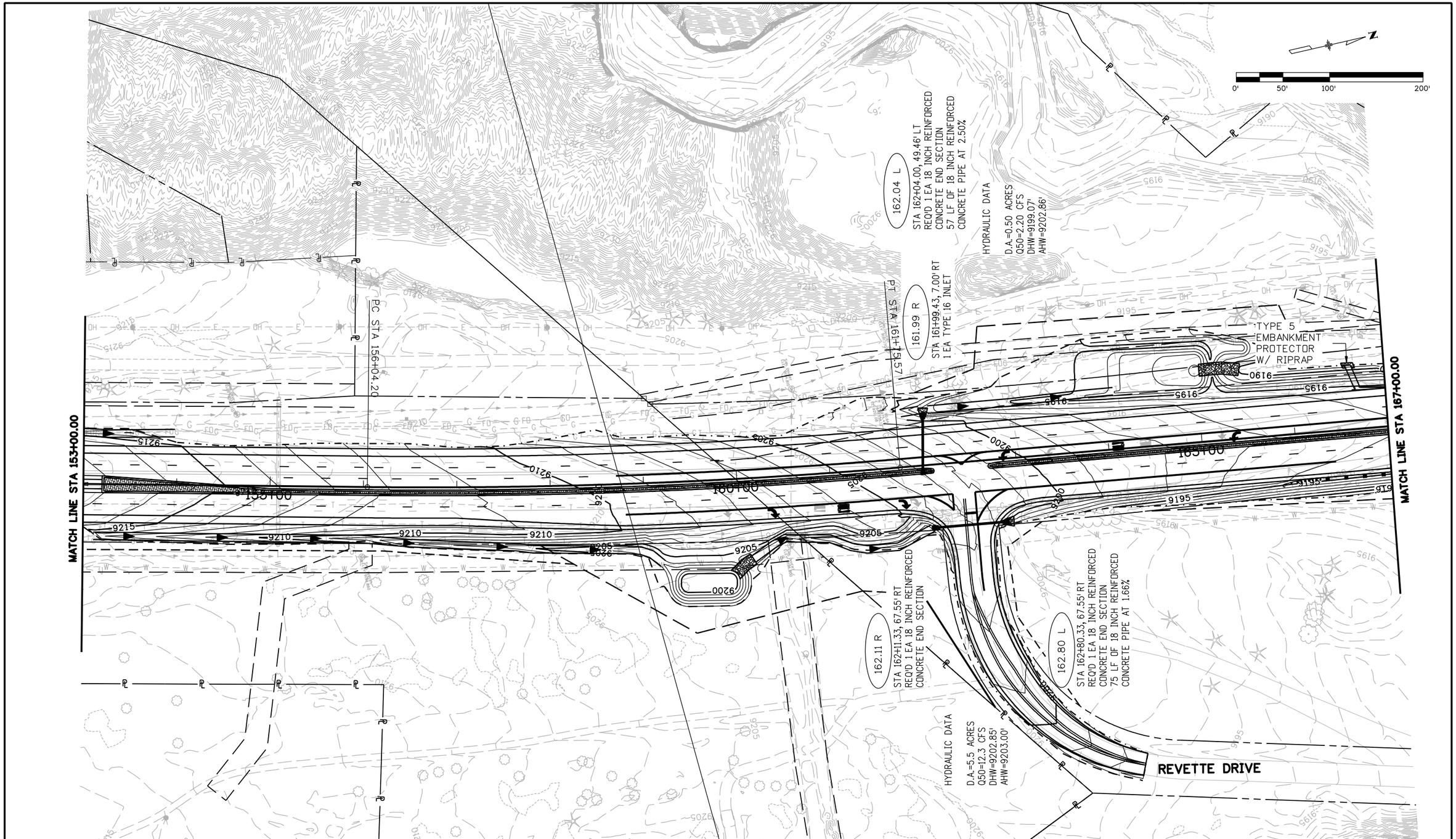


| | | | |
|---|---|---|---|
| Print Date: 1/26/2009 | | | |
| File Name: 16439Drainage03.dgn | | | |
| Horiz. Scale: 1:100 | Vert. Scale: As Noted | | |
| Unit Information | Unit Leader Initials | | |

PBSJ 4601 DTC Boulevard, Suite 700
Denver, CO 80237
Phone: (303) 221-7275 Fax: (303) 221-7276

| Sheet Revisions | | |
|---|---|---|
| Date: | Comments | Init. |
| | | |
| | | |
| | | |
| | | |

Colorado Department of Transportation
DOT DEPARTMENT OF TRANSPORTATION
Mountain Residency P.O. Box 399
Dumont, CO 80436
Phone: 303-512-5750 FAX: 303-512-5775
Region 1 DCW

As Constructed
No Revisions:
Revised:
Void:

SH 9 DRAINAGE & GRADING PLAN
STA 153+00 TO STA 167+00

| | | | |
|---|---|---|---|
| Designer: | SLZ | Structure Numbers | |
| Detailer: | SLZ | | |
| Sheet Subset: | DRAINAGE | Subset Sheets: | 3 of 21 |

Project No./Code
STA 0091-035
16439
Sheet Number 116

21698 9:12:47 AM S:\Tranproj\246220-05\14927\Consultants\Plot_Sets\SHELF\16439Drainage03.dgn

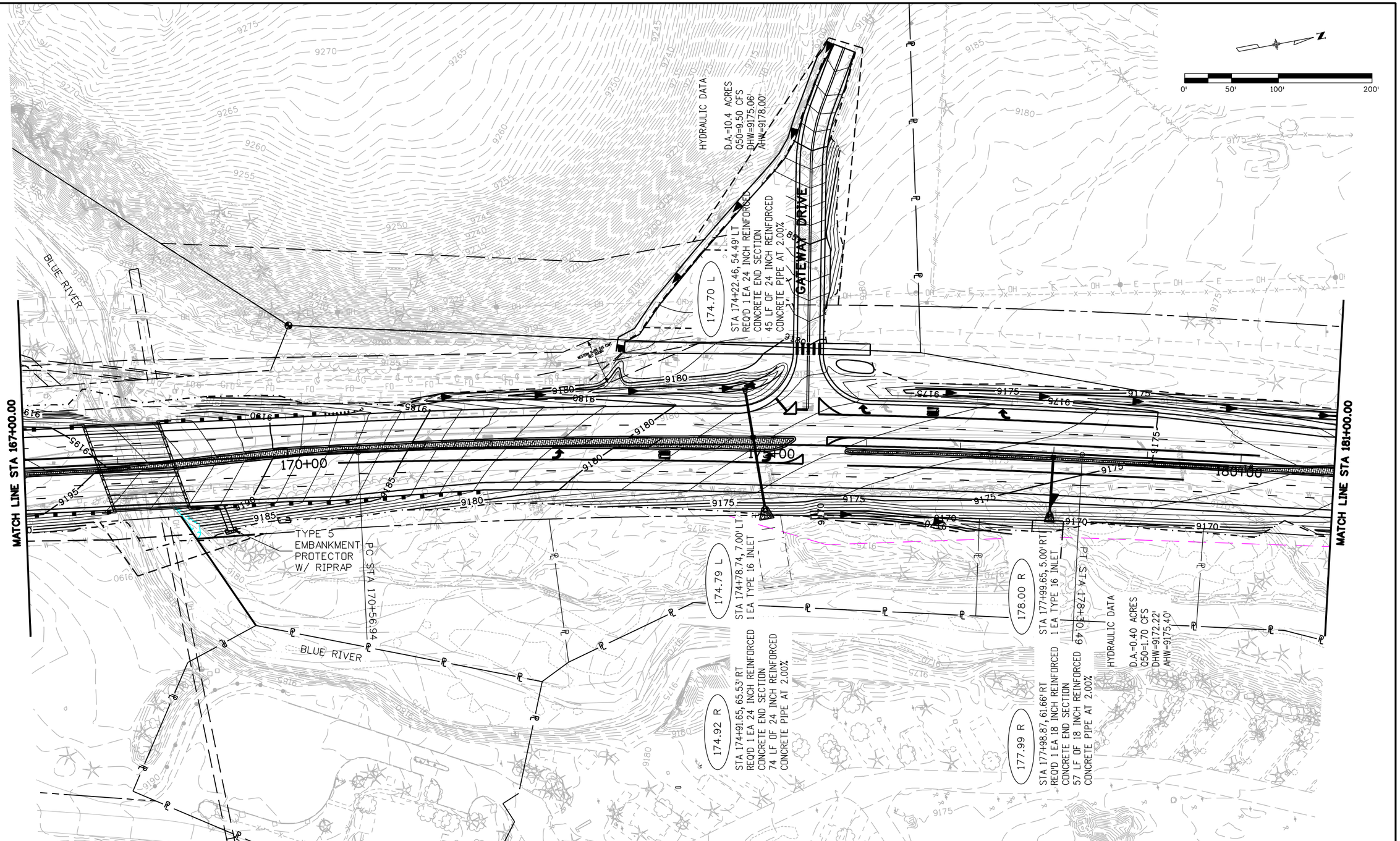


Print Date: 1/26/2009
File Name: 16439Drainage04.dgn
Horiz. Scale: 1:100 Vert. Scale: As Noted
Unit Information Unit Leader Initials

PBSJ 4601 DTC Boulevard, Suite 700 Denver, CO 80237 Phone: (303) 221-7275 Fax: (303) 221-7276

| Sheet Revisions | | |
|---|---|---|
| Date: | Comments | Init. |
| | | |
| | | |
| | | |
| | | |

Colorado Department of Transportation
DOT
Mountain Residency P.O. Box 399
Dumont, CO 80436
Phone: 303-512-5750 FAX: 303-512-5775
Region 1 DCW

As Constructed
No Revisions:
Revised:
Void:

SH 9 DRAINAGE & GRADING PLAN
STA 167+00 TO STA 181+00

Designer: SLZ
Detailer: SLZ
Sheet Subset: DRAINAGE
Structure Numbers
Subset Sheets: 4 of 21

Project No./Code
STA 0091-035
16439
Sheet Number 117

21698 9:13:13 AM S:\Tranproj\246220-05\14927\Consultants\Plot_Sets\SHELF\16439Drainage04.dgn

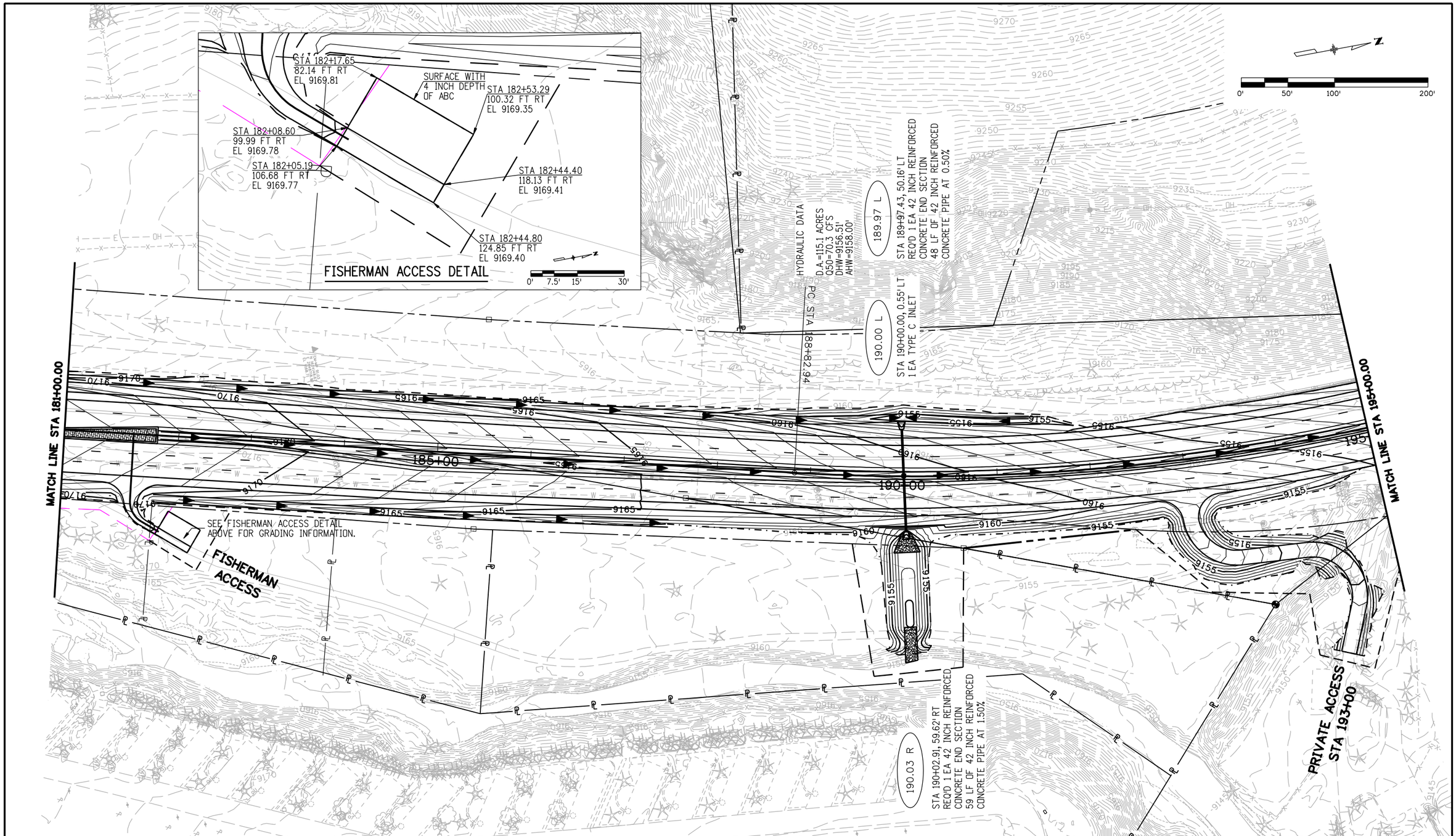


| | | | |
|---|---|---|---|
| Print Date: 1/26/2009 | | | |
| File Name: 16439Drainage05.dgn | | | |
| Horiz. Scale: 1:100 | Vert. Scale: As Noted | | |
| Unit Information | Unit Leader Initials | | |

PBSJ 4601 DTC Boulevard, Suite 700
Denver, CO 80237
Phone: (303) 221-7275 Fax: (303) 221-7276

**Sheet Revisions**

| Date: | Comments | Init. |
|---|---|---|
| | | |
| | | |
| | | |
| | | |

Colorado Department of Transportation
DOT
DEPARTMENT OF TRANSPORTATION
Mountain Residency P.O. Box 399
Dumont, CO 80436
Phone: 303-512-5750 FAX: 303-512-5775
Region 1 DCW

As Constructed
No Revisions:
Revised:
Void:

SH 9 DRAINAGE & GRADING PLAN
STA 181+00 TO STA 195+00

| | | | |
|---|---|---|---|
| Designer: | SLZ | Structure Numbers | |
| Detailer: | SLZ | | |
| Sheet Subset: | DRAINAGE | Subset Sheets: | 5 of 21 |

Project No./Code
STA 0091-035
16439
Sheet Number 118

21698 9:13:51 AM S:\Tranproj\246220-05\14927\Consultants\Plot_Sets\SHELF\16439Drainage05.dgn

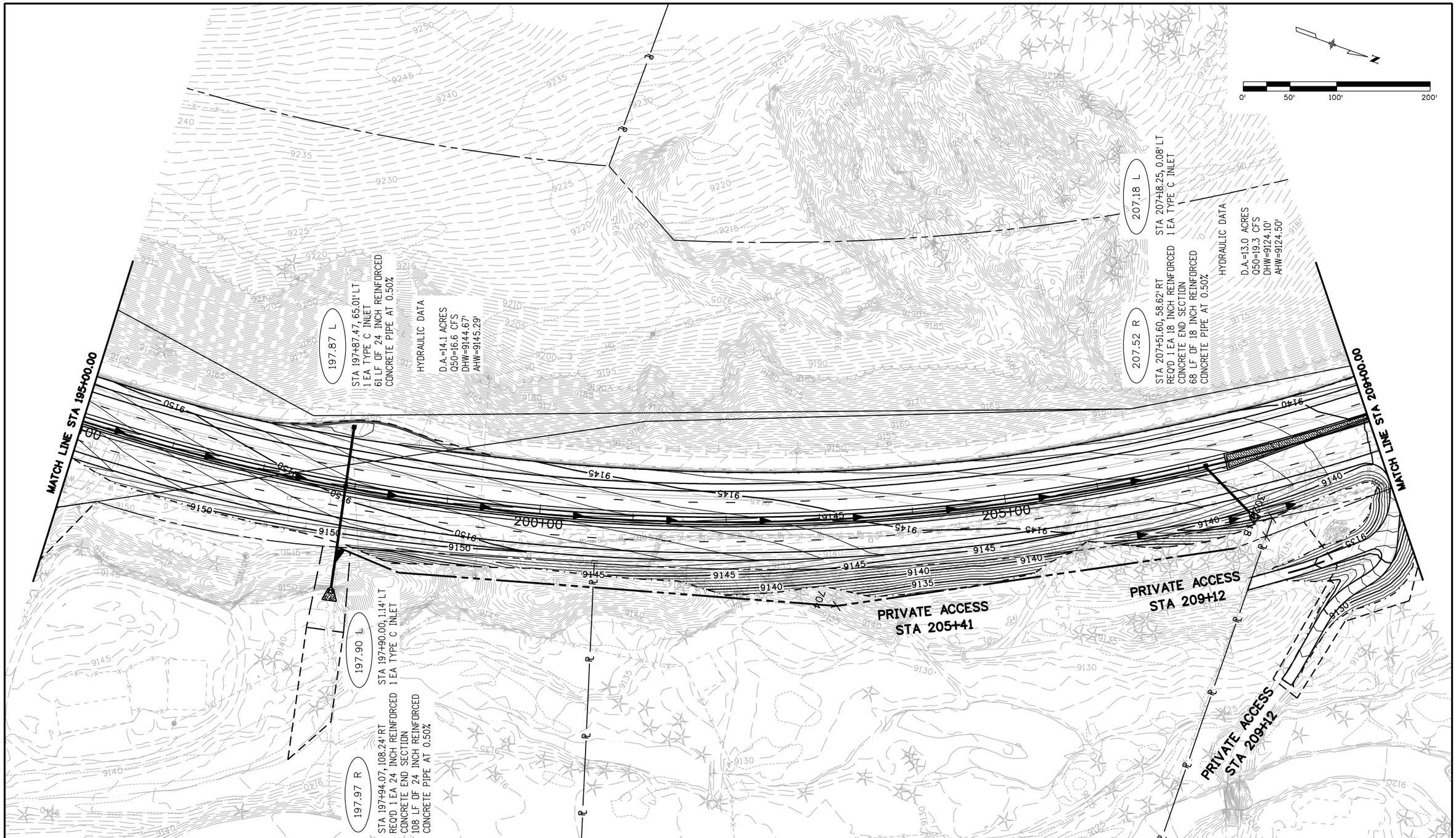


| | | | |
|---|---|---|---|
| Print Date: 1/26/2009 | Sheet Revisions | Colorado Department of Transportation | As Constructed |
| File Name: 16439Drainage06.dgn | Date: / Comments / Init. | Mountain Residency P.O. Box 399 Dumont, CO 80436 Phone: 303-512-5750 FAX: 303-512-5775 | No Revisions: |
| Horiz. Scale: 1:100 Vert. Scale: As Noted | | Region 1 DCW | Revised: |
| Unit Information Unit Leader Initials | | | Void: |
| PBSJ 4601 DTC Boulevard, Suite 700 Denver, CO 80237 Phone: (303) 221-7275 Fax: (303) 221-7276 | | | |

| | | | |
|---|---|---|---|
| SH 9 DRAINAGE & GRADING PLAN STA 195+00 TO STA 209+00 | | | Project No./Code |
| | | | STA 0091-035 |
| Designer: SLZ | Structure Numbers | | 16439 |
| Detailer: SLZ | | | |
| Sheet Subset: DRAINAGE | Subset Sheets: 6 of 21 | | Sheet Number 119 |

21698 9:14:22 AM S:\Tranproj\246220-05\14927\Consultants\Plot_Sets\SHELF\16439Drainage06.dgn

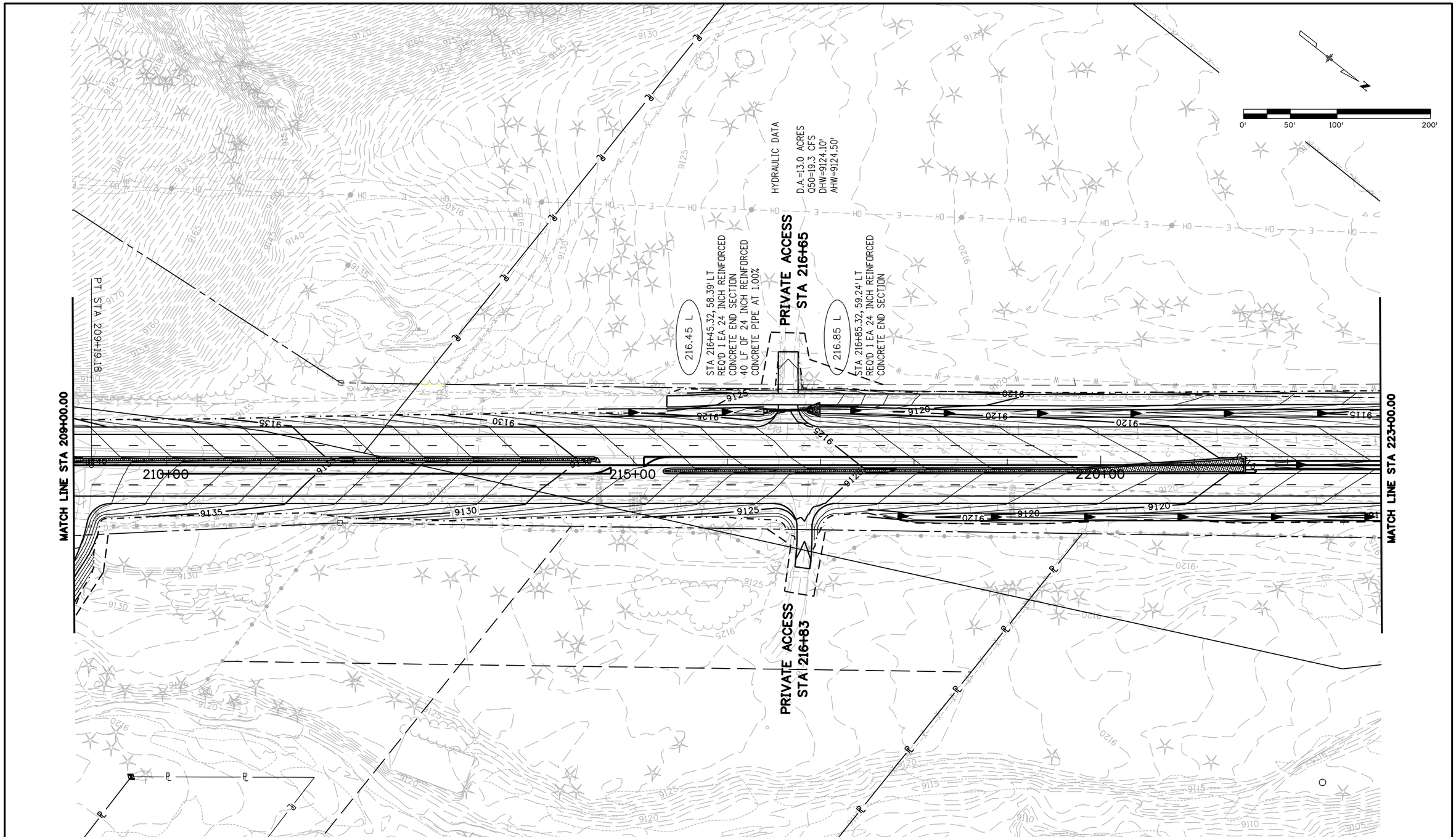


| | | | |
|---|---|---|---|
| Print Date: 1/26/2009 | | | |
| File Name: 16439Drainage07.dgn | | | |
| Horiz. Scale: 1:100 | Vert. Scale: As Noted | | |
| Unit Information | Unit Leader Initials | | |

PBSJ 4601 DTC Boulevard, Suite 700
Denver, CO 80237
Phone: (303) 221-7275 Fax: (303) 221-7276

Sheet Revisions

| Date: | Comments | Init. |
|---|---|---|
| | | |
| | | |
| | | |
| | | |

Colorado Department of Transportation
Mountain Residency P.O. Box 399
Dumont, CO 80436
Phone: 303-512-5750 FAX: 303-512-5775
Region 1 DCW

As Constructed
No Revisions:
Revised:
Void:

SH 9 DRAINAGE & GRADING PLAN
STA 209+00 TO STA 223+00

| | | | |
|---|---|---|---|
| Designer: | SLZ | Structure Numbers | |
| Detailer: | SLZ | | |
| Sheet Subset: | DRAINAGE | Subset Sheets: | 7 of 21 |

Project No./Code
STA 0091-035
16439
Sheet Number 120

21698 9:14:49 AM S:\Tranproj\246220-05\14927\Consultants\Plot_Sets\SHELF\16439Drainage07.dgn

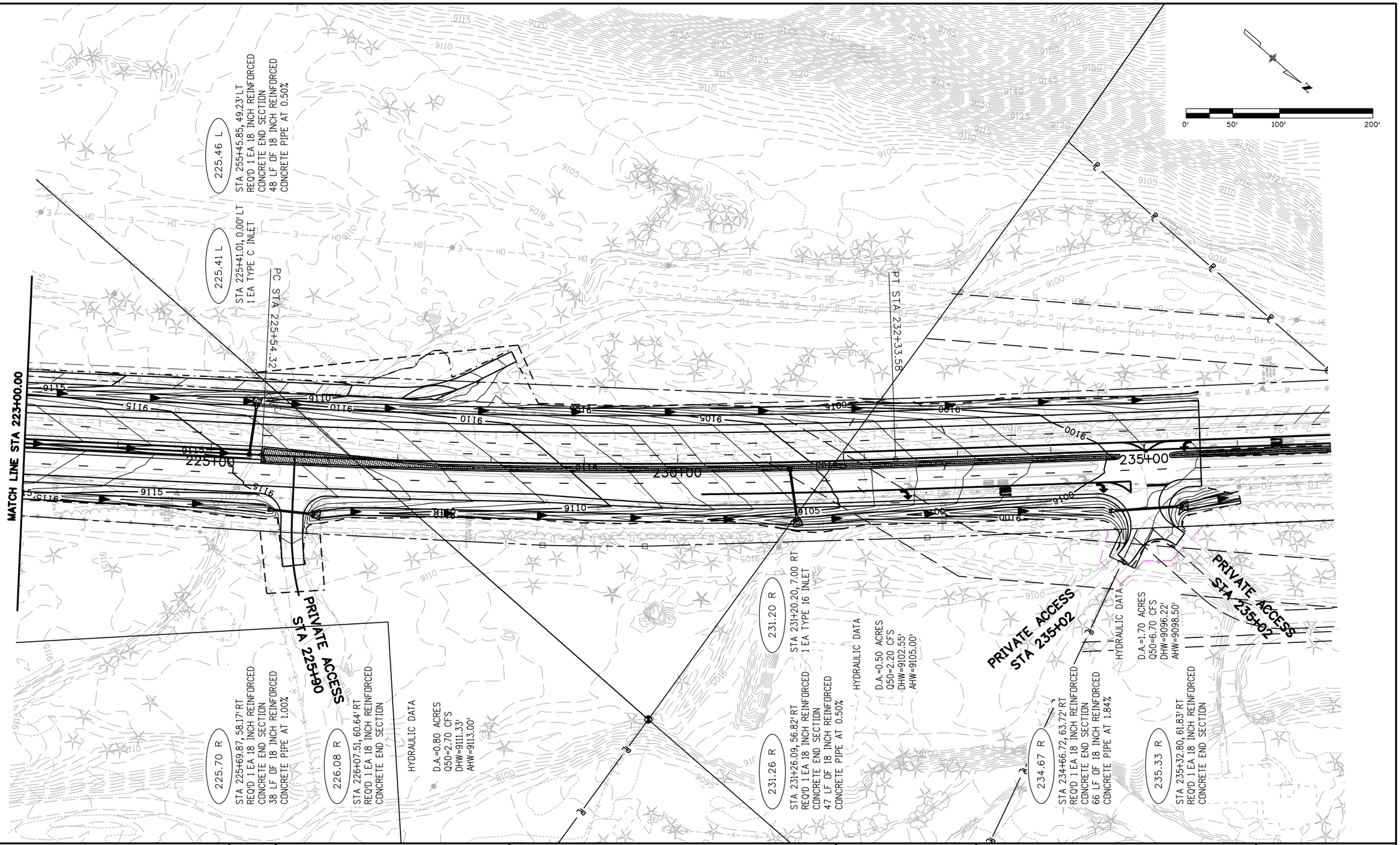


| | | | |
|---|---|---|---|
| Print Date: 1/26/2009 | Sheet Revisions | Colorado Department of Transportation | As Constructed |
| File Name: 16439Drainage08.dgn | Date: / Comments / Init. | Mountain Residency P.O. Box 399<br>Dumont, CO 80436<br>Phone: 303-512-5750 FAX: 303-512-5775 | No Revisions: |
| Horiz. Scale: 1:100 Vert. Scale: As Noted | | Region 1 DCW | Revised: |
| Unit Information Unit Leader Initials | | | Void: |
| PBSJ 4601 DTC Boulevard, Suite 700<br>Denver, CO 80237<br>Phone: (303) 221-7275 Fax: (303) 221-7276 | | | |

| | | | |
|---|---|---|---|
| SH 9 DRAINAGE & GRADING PLAN<br>STA 223+00 TO STA 237+00 | | | Project No./Code |
| Designer: SLZ | Structure Numbers | | STA 0091-035 |
| Detailer: SLZ | | | 16439 |
| Sheet Subset: DRAINAGE | Subset Sheets: 8 of 21 | | Sheet Number 121 |

21698 9:15:35 AM S:\Tranproj\246220-05\14927\Consultants\Plot_Sets\SHELF\16439Drainage08.dgn

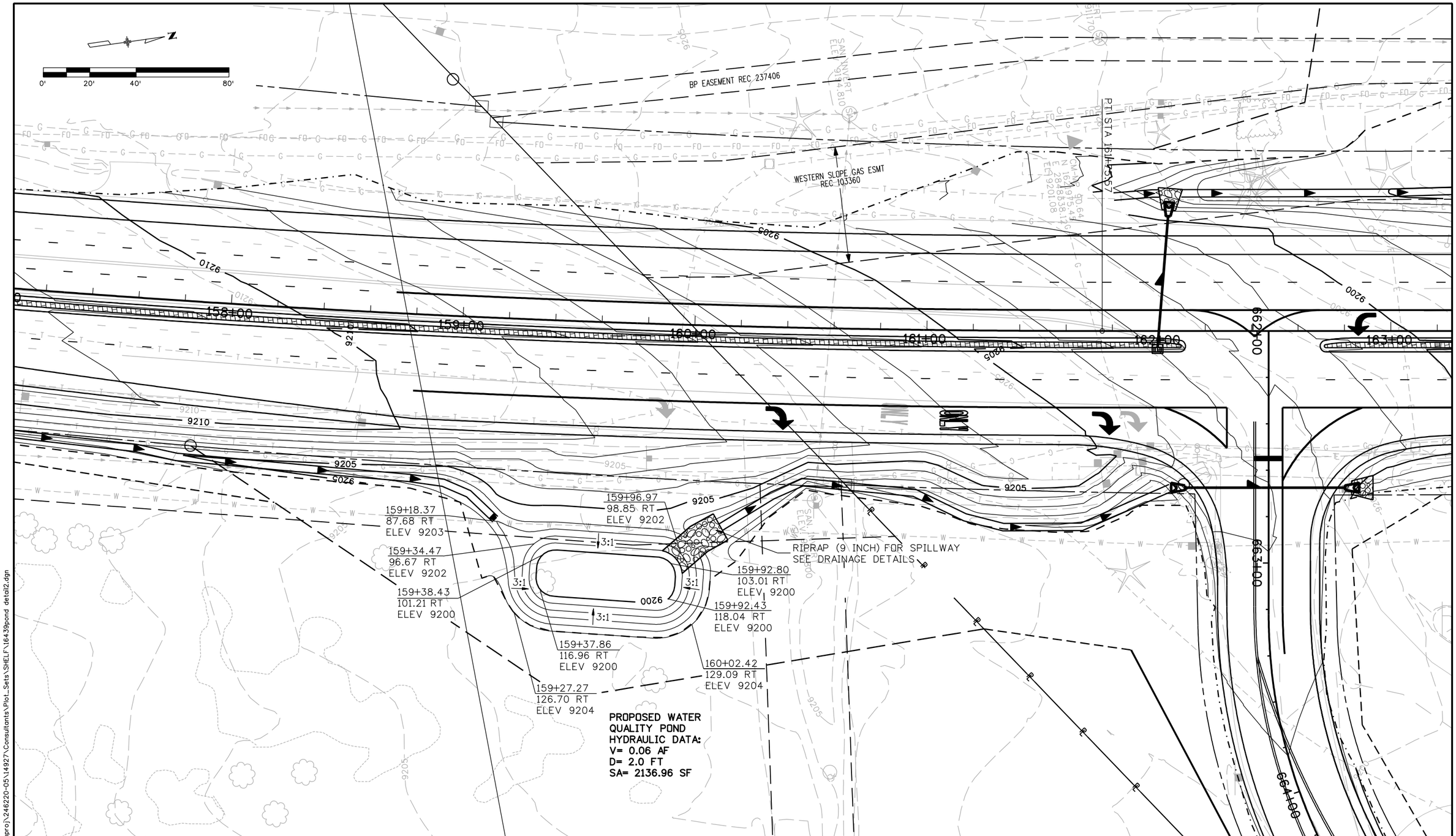


21698 9:16:26 AM S:\Tranproj\246220-05\14927\Consultants\Plot_Sets\SHELF\16439pond detail2.dgn

| | | | |
|---|---|---|---|
| Print Date: 1/26/2009 | Sheet Revisions | Colorado Department of Transportation | As Constructed |
| File Name: 16439pond detail2.dgn | Date: / Comments / Init. | Mountain Residency P.O. Box 399<br>Dumont, CO 80436<br>Phone: 303-512-5750 FAX: 303-512-5775 | No Revisions: |
| Horiz. Scale: 1:40 Vert. Scale: As Noted | | Region 1 DCW | Revised: |
| Unit Information Unit Leader Initials | | | Void: |
| PBSJ 4601 DTC Boulevard, Suite 700<br>Denver, CO 80237<br>Phone: (303) 221-7275 Fax: (303) 221-7276 | | | |

| | | | |
|---|---|---|---|
| SH 9 DRAINAGE & GRADING PLAN<br>SEDIMENT POND - DETAIL | | | Project No./Code |
| Designer: SLZ | Structure Numbers | | STA 0091-035 |
| Detailer: SLZ | | | 16439 |
| Sheet Subset: DRAINAGE | Subset Sheets: 9 of 21 | | Sheet Number 122 |

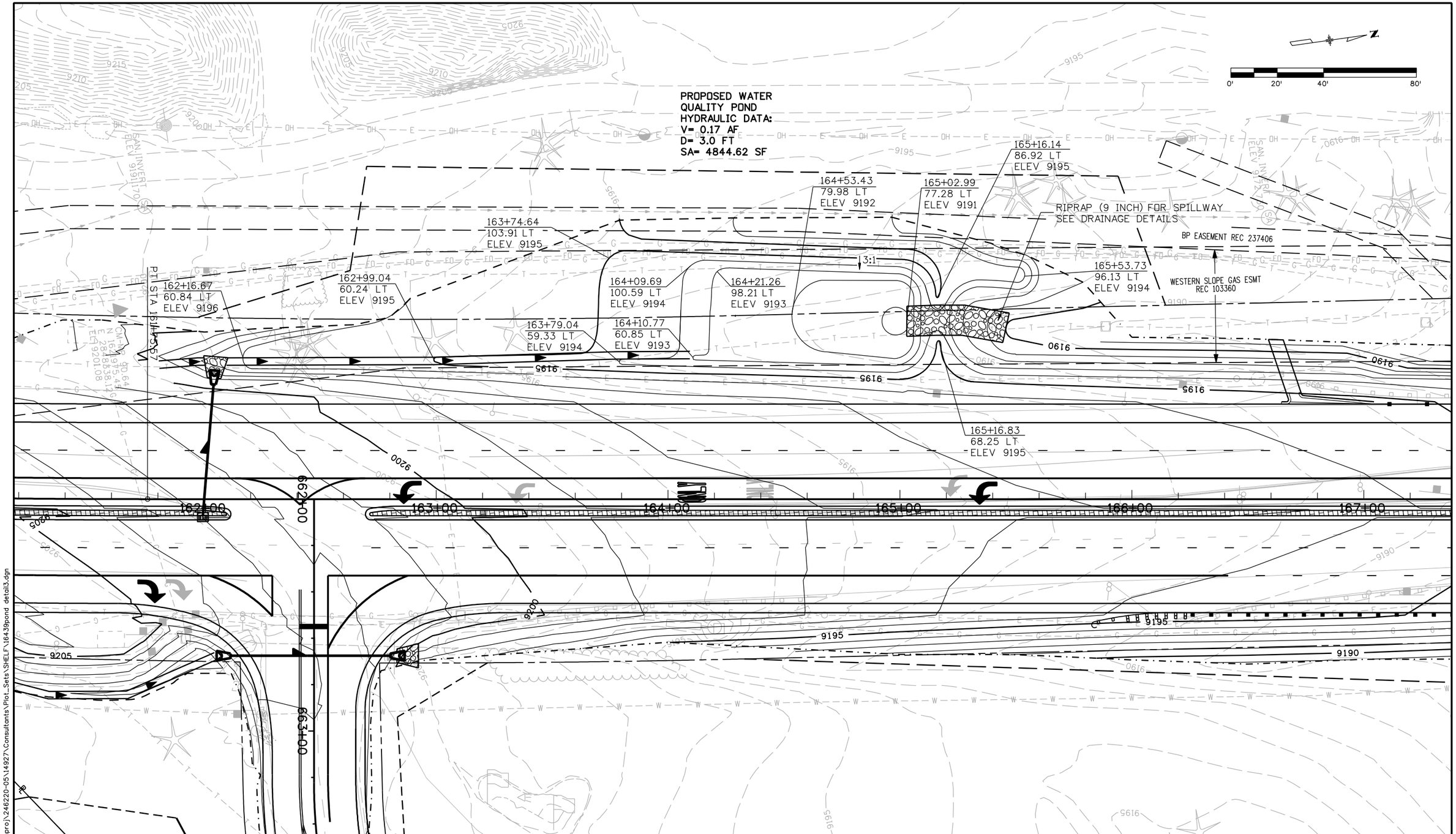


| | | | |
|---|---|---|---|
| Print Date: 1/26/2009 | | | |
| File Name: 16439pond detail3.dgn | | | |
| Horiz. Scale: 1:40 | Vert. Scale: As Noted | | |
| Unit Information | Unit Leader Initials | | |

PBSJ 4601 DTC Boulevard, Suite 700
Denver, CO 80237
Phone: (303) 221-7275 Fax: (303) 221-7276

Sheet Revisions

| Date: | Comments | Init. |
|---|---|---|
| | | |
| | | |
| | | |
| | | |

Colorado Department of Transportation
DOT
Mountain Residency P.O. Box 399
Dumont, CO 80436
Phone: 303-512-5750 FAX: 303-512-5775
Region 1 DCW

As Constructed
No Revisions:
Revised:
Void:

SH 9 DRAINAGE & GRADING PLAN
SEDIMENT POND - DETAIL

| | | | |
|---|---|---|---|
| Designer: | SLZ | Structure Numbers | |
| Detailer: | SLZ | | |
| Sheet Subset: | DRAINAGE | Subset Sheets: | 10 of 21 |

Project No./Code
STA 0091-035
16439
Sheet Number 123

21698 9:16:54 AM S:\Tranproj\246220-05\14927\Consultants\Plot_Sets\SHELF\16439pond detail3.dgn

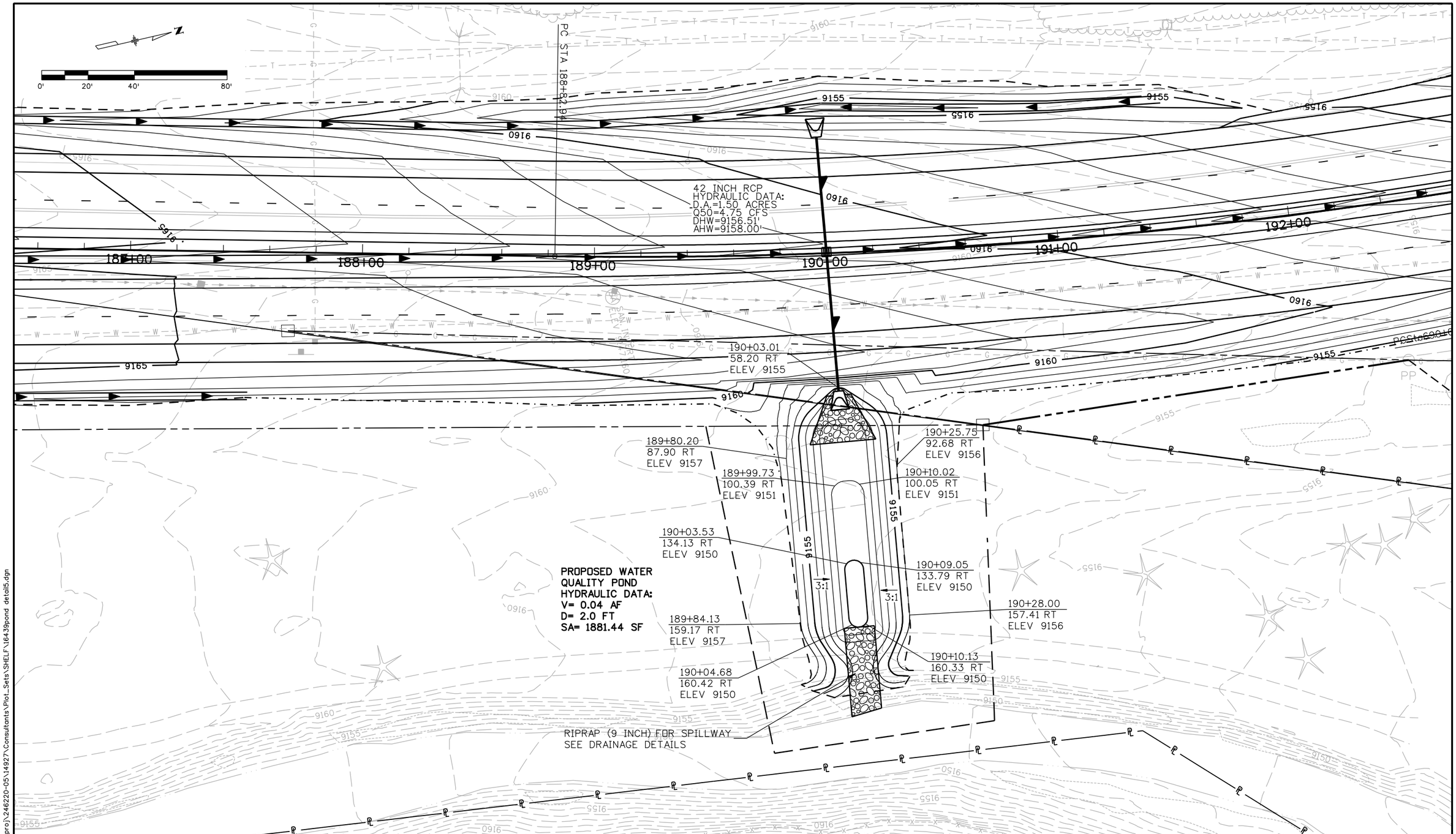


21698 9:17:25 AM S:\Tranproj\246220-05\14927\Consultants\Plot_Sets\SHELF\16439pond detail5.dgn

| | | | |
|---|---|---|---|
| Print Date: 1/26/2009 | Sheet Revisions | Colorado Department of Transportation | As Constructed |
| File Name: 16439pond detail5.dgn | Date: / Comments / Init. | Mountain Residency P.O. Box 399<br>Dumont, CO 80436<br>Phone: 303-512-5750 FAX: 303-512-5775 | No Revisions: |
| Horiz. Scale: 1:40 Vert. Scale: As Noted | | Region 1 DCW | Revised: |
| Unit Information Unit Leader Initials | | | Void: |
| PBSJ 4601 DTC Boulevard, Suite 700<br>Denver, CO 80237<br>Phone: (303) 221-7275 Fax: (303) 221-7276 | | | |

| | | | |
|---|---|---|---|
| SH 9 DRAINAGE & GRADING PLAN<br>SEDIMENT POND - DETAIL | | | Project No./Code |
| Designer: SLZ | Structure Numbers | | STA 0091-035 |
| Detailer: SLZ | | | 16439 |
| Sheet Subset: DRAINAGE | Subset Sheets: 11 of 21 | | Sheet Number 124 |

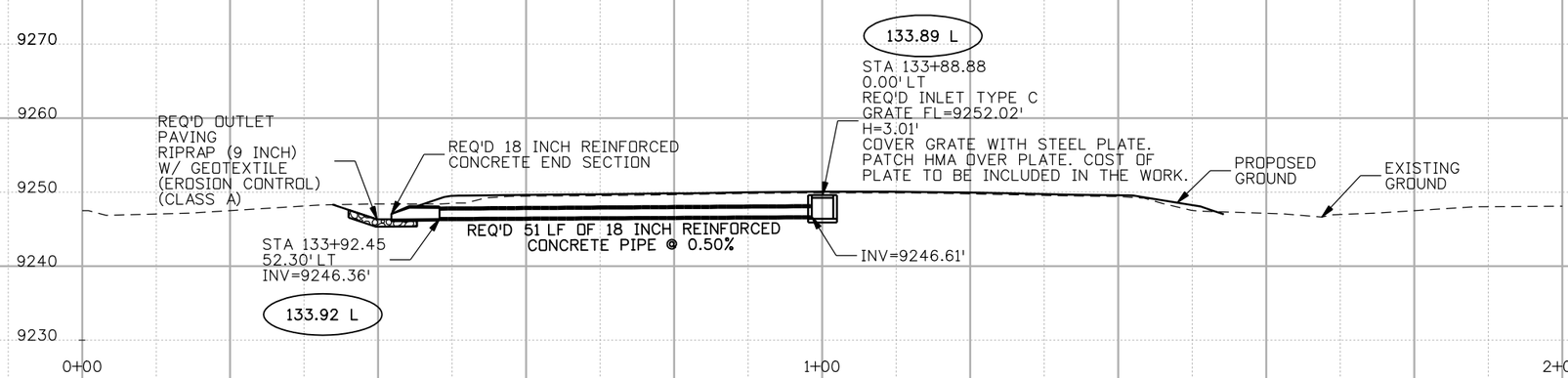


SH 9 STA 133+88.88 LT TO STA 133+92.45 LT

REQUIRED 51 LF OF 18 INCH REINFORCED CONCRETE PIPE
1 EA 18 INCH REINFORCED CONCRETE END SECTIONS
1 EA INLET TYPE C (H=5 FOOT)
4 CY RIPRAP (9 INCH)

| FOR INFORMATION ONLY: | REQUIRED: |
|---|---|
| STRUCTURE EXCAVATION 33 CU YD | STRUCTURE EXCAVATION 3 CU YD |
| STRUCTURE BACKFILL CL1 25 CU YD | EMBANKMENT MATERIAL 3 CU YD |

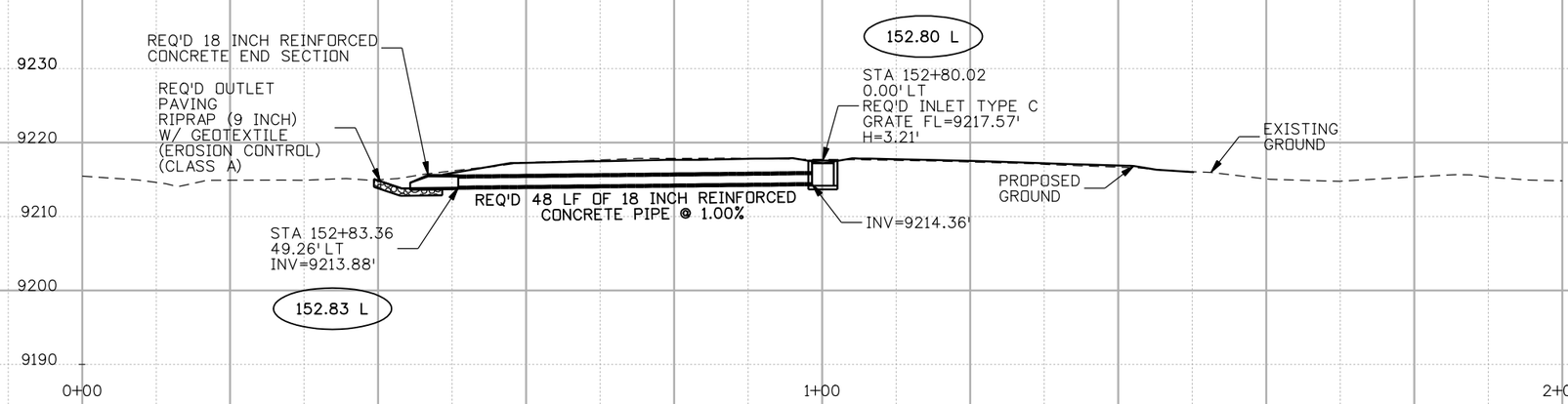


SH 9 STA 152+80.02 LT TO STA 152+83.36 LT

REQUIRED 48 LF OF 18 INCH REINFORCED CONCRETE PIPE
1 EA 18 INCH REINFORCED CONCRETE END SECTIONS
1 EA INLET TYPE C (H=5 FOOT)
4 CY RIPRAP (9 INCH)

| FOR INFORMATION ONLY: | REQUIRED: |
|---|---|
| STRUCTURE EXCAVATION 31 CU YD | STRUCTURE EXCAVATION 5 CU YD |
| STRUCTURE BACKFILL CL1 24 CU YD | EMBANKMENT MATERIAL 5 CU YD |

Print Date: 1/26/2009
File Name: 16439DrainageProfileSheet01.dgn
Horiz. Scale: 1:20 Vert. Scale: As Noted
Unit Information Unit Leader Initials

PBSJ 4601 DTC Boulevard, Suite 700
Denver, CO 80237
Phone: (303) 221-7275 Fax: (303) 221-7276

R-X

Sheet Revisions

| Date: | Comments | Init. |
|---|---|---|
| | | |
| | | |
| | | |

Colorado Department of Transportation
DOT
Mountain Residency P.O. Box 399
Dumont, CO 80436
Phone: 303-512-5750 FAX: 303-512-5775
Region 1 DCW

As Constructed
No Revisions:
Revised:
Void:

STRUCTURE CROSS SECTIONS

Designer: SLZ
Detailer: SLZ
Structure Numbers
Sheet Subset: DRAINAGE
Subset Sheets: 12 of 21

Project No./Code
STA 0091-035
16439
Sheet Number 125

21698 9:18:11 AM S:\Tranproj\246220-05\14927\Consultants\Plot_Sets\SHELF\16439DrainageProfileSheet01.dgn

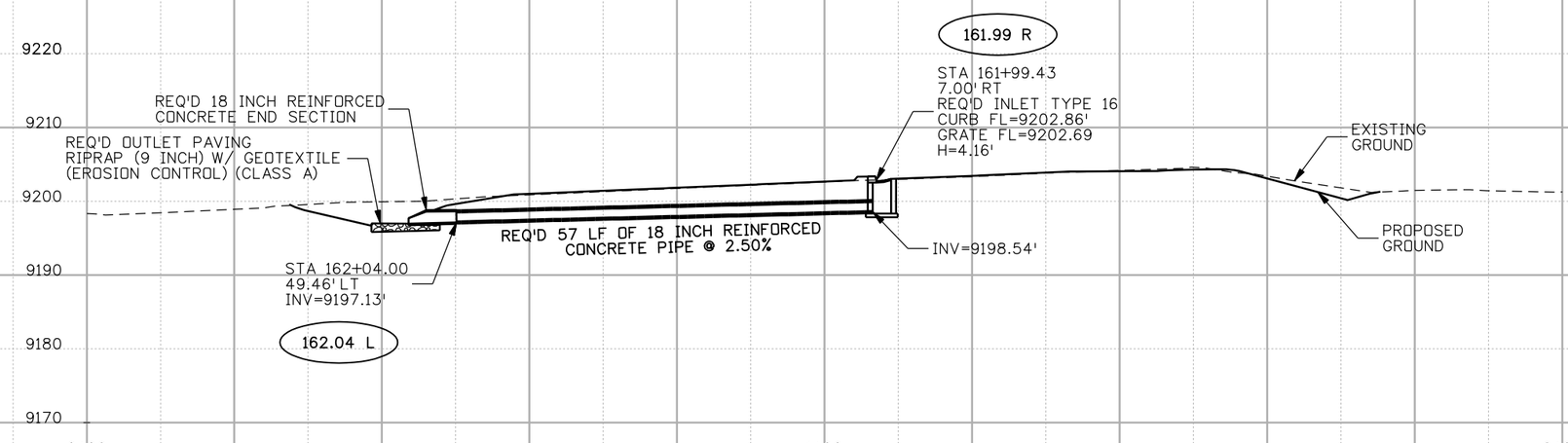


## SH 9 STA 161+99.35 LT TO STA 162+04.00 LT

REQUIRED 57 LF OF 18 INCH REINFORCED CONCRETE PIPE
1 EA 18 INCH REINFORCED CONCRETE END SECTIONS
1 EA INLET TYPE 16 (H=5 FOOT)
4 CY RIPRAP (9 INCH)

HYDRAULIC DATA:

D.A.=0.50 ACRES
Q50=2.20 CFS
DHW=9199.07'
AHW=9202.86'

FOR INFORMATION ONLY:

STRUCTURE EXCAVATION
37 CU YD
STRUCTURE BACKFILL CL1
28 CU YD

REQUIRED:

STRUCTURE EXCAVATION
11 CU YD
EMBANKMENT MATERIAL
11 CU YD

## SH 9 STA 162+11.33 RT TO STA 162+80.33 RT

REQUIRED 75 LF OF 18 INCH REINFORCED CONCRETE PIPE
2 EA 18 INCH REINFORCED CONCRETE END SECTIONS
4 CY RIPRAP (9 INCH)

HYDRAULIC DATA:

D.A.=5.5 ACRES
Q50=12.3 CFS
DHW=9202.85'
AHW=9203.00'

FOR INFORMATION ONLY:

STRUCTURE EXCAVATION
45 CU YD
STRUCTURE BACKFILL CL1
37 CU YD

REQUIRED:

STRUCTURE EXCAVATION
5 CU YD
EMBANKMENT MATERIAL
5 CU YD

| | | | |
|---|---|---|---|
| Print Date: 1/26/2009 | Sheet Revisions | Colorado Department of Transportation | As Constructed |
| File Name: 16439DrainageProfileSheet02.dgn | Date: / Comments / Init. | DOT Department of Transportation | No Revisions: |
| Horiz. Scale: 1:20 Vert. Scale: As Noted | R-X | Mountain Residency P.O. Box 399 Dumont, CO 80436 Phone: 303-512-5750 FAX: 303-512-5775 | Revised: |
| Unit Information Unit Leader Initials | | Region 1 DCW | Void: |
| PBSJ 4601 DTC Boulevard, Suite 700 Denver, CO 80237 Phone: (303) 221-7275 Fax: (303) 221-7276 | | | |

STRUCTURE CROSS SECTIONS

| | | | |
|---|---|---|---|
| Designer: SLZ | Structure Numbers | | Project No./Code |
| Detailer: SLZ | | | STA 0091-035 |
| Sheet Subset: DRAINAGE | Subset Sheets: 13 of 21 | | 16439 |
| | | | Sheet Number 126 |

21698 9:18:43 AM S:\Tranproj\246220-05\14927\Consultants\Plot_Sets\SHELF\16439DrainageProfileSheet02.dgn

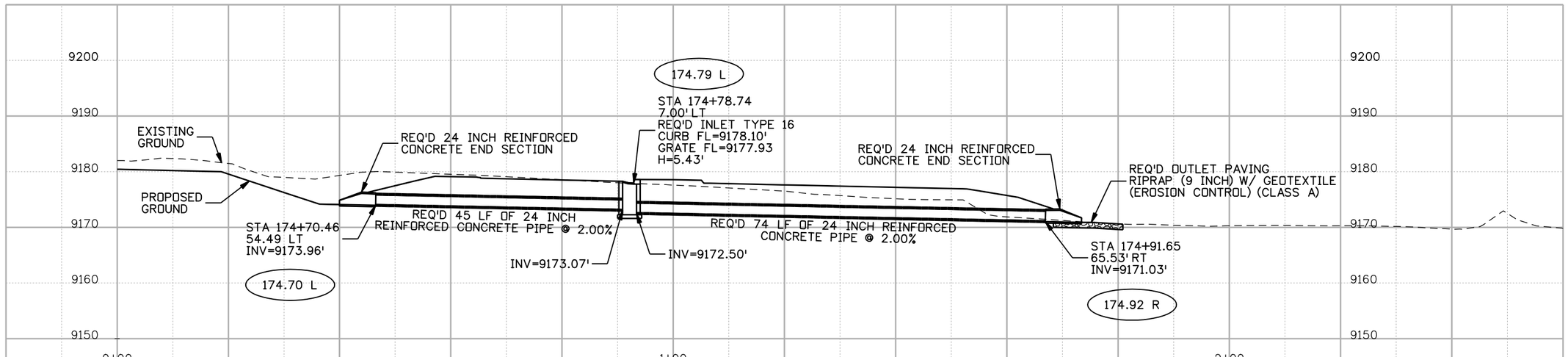


SH 9 STA 174+70.46 LT TO STA 174+91.65 RT

REQUIRED 119 LF OF 24 INCH REINFORCED CONCRETE PIPE
2 EA 24 INCH REINFORCED CONCRETE END SECTIONS
1 EA INLET TYPE 16 (H=10 FOOT)
6 CY RIPRAP (9 INCH)

HYDRAULIC DATA:
D.A.=10.4 ACRES
Q50=9.50 CFS
DHW=9175.06'
AHW=9178.00'

FOR INFORMATION ONLY:
STRUCTURE EXCAVATION
90 CU YD
STRUCTURE BACKFILL CL1
69 CU YD

REQUIRED:
STRUCTURE EXCAVATION
28 CU YD
EMBANKMENT MATERIAL
28 CU YD

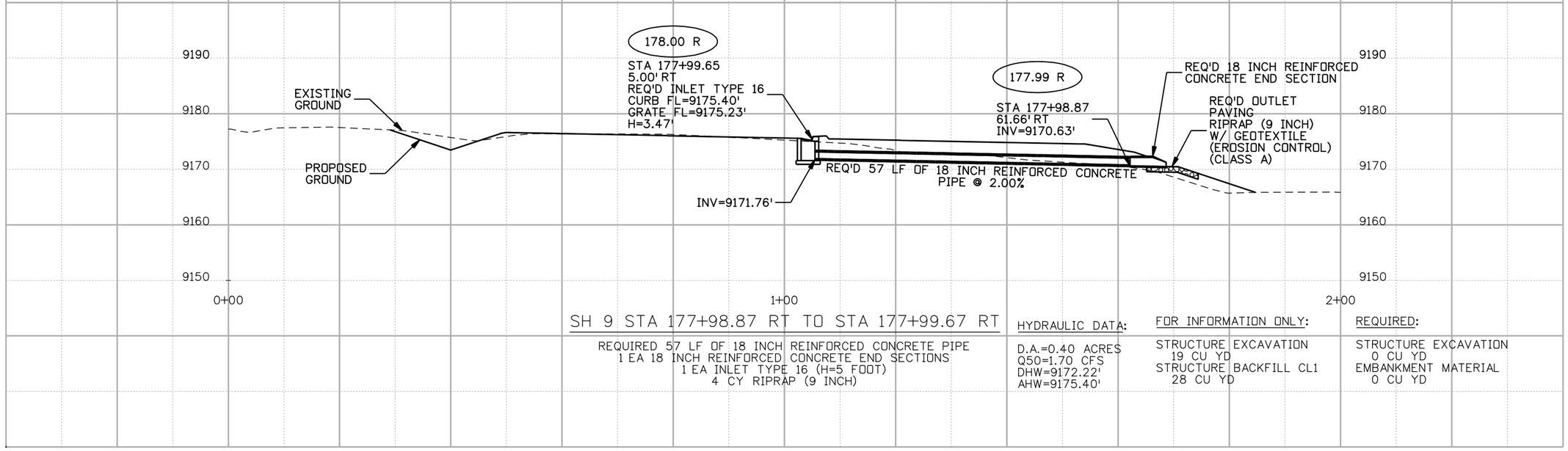


SH 9 STA 177+98.87 RT TO STA 177+99.67 RT

REQUIRED 57 LF OF 18 INCH REINFORCED CONCRETE PIPE
1 EA 18 INCH REINFORCED CONCRETE END SECTIONS
1 EA INLET TYPE 16 (H=5 FOOT)
4 CY RIPRAP (9 INCH)

HYDRAULIC DATA:
D.A.=0.40 ACRES
Q50=1.70 CFS
DHW=9172.22'
AHW=9175.40'

FOR INFORMATION ONLY:
STRUCTURE EXCAVATION
19 CU YD
STRUCTURE BACKFILL CL1
28 CU YD

REQUIRED:
STRUCTURE EXCAVATION
0 CU YD
EMBANKMENT MATERIAL
0 CU YD

| | | | |
|---|---|---|---|
| Print Date: 1/26/2009 | Sheet Revisions | Colorado Department of Transportation | As Constructed |
| File Name: 16439DrainageProfileSheet03.dgn | Date: / Comments / Init. | DOT Mountain Residency P.O. Box 399 Dumont, CO 80436 Phone: 303-512-5750 FAX: 303-512-5775 | No Revisions: |
| Horiz. Scale: 1:20 Vert. Scale: As Noted | R-X | Region 1 DCW | Revised: |
| Unit Information Unit Leader Initials | | | Void: |
| PBSJ 4601 DTC Boulevard, Suite 700 Denver, CO 80237 Phone: (303) 221-7275 Fax: (303) 221-7276 | | | |

STRUCTURE CROSS SECTIONS

| | | | |
|---|---|---|---|
| Designer: SLZ | Structure Numbers | | Project No./Code |
| Detailer: SLZ | | | STA 0091-035 |
| Sheet Subset: DRAINAGE | Subset Sheets: 14 of 21 | | 16439 |
| | | | Sheet Number 127 |

21698 9:19:18 AM S:\Tranproj\246220-05\14927\Consultants\Plot_Sets\SHELF\16439DrainageProfileSheet03.dgn

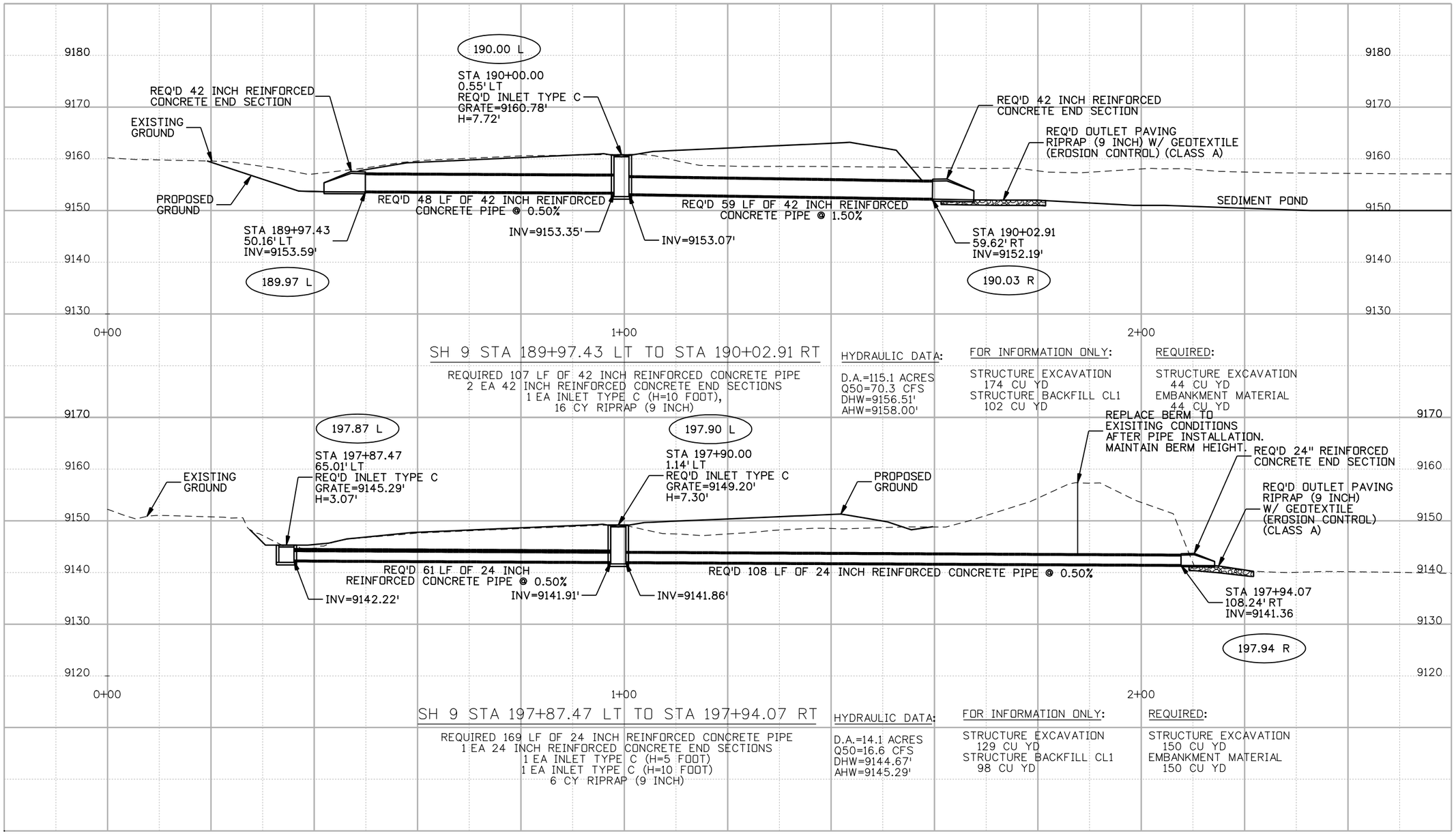


## SH 9 STA 189+97.43 LT TO STA 190+02.91 RT

REQUIRED 107 LF OF 42 INCH REINFORCED CONCRETE PIPE
2 EA 42 INCH REINFORCED CONCRETE END SECTIONS
1 EA INLET TYPE C (H=10 FOOT),
16 CY RIPRAP (9 INCH)

HYDRAULIC DATA:
D.A.=115.1 ACRES
Q50=70.3 CFS
DHW=9156.51'
AHW=9158.00'

FOR INFORMATION ONLY:
STRUCTURE EXCAVATION
174 CU YD
STRUCTURE BACKFILL CL1
102 CU YD

REQUIRED:
STRUCTURE EXCAVATION
44 CU YD
EMBANKMENT MATERIAL
44 CU YD

## SH 9 STA 197+87.47 LT TO STA 197+94.07 RT

REQUIRED 169 LF OF 24 INCH REINFORCED CONCRETE PIPE
1 EA 24 INCH REINFORCED CONCRETE END SECTIONS
1 EA INLET TYPE C (H=5 FOOT)
1 EA INLET TYPE C (H=10 FOOT)
6 CY RIPRAP (9 INCH)

HYDRAULIC DATA:
D.A.=14.1 ACRES
Q50=16.6 CFS
DHW=9144.67'
AHW=9145.29'

FOR INFORMATION ONLY:
STRUCTURE EXCAVATION
129 CU YD
STRUCTURE BACKFILL CL1
98 CU YD

REQUIRED:
STRUCTURE EXCAVATION
150 CU YD
EMBANKMENT MATERIAL
150 CU YD

| | | | |
|---|---|---|---|
| Print Date: 1/26/2009 | Sheet Revisions | Colorado Department of Transportation | As Constructed |
| File Name: 16439DrainageProfileSheet04.dgn | Date: / Comments / Init. | Mountain Residency P.O. Box 399 Dumont, CO 80436 Phone: 303-512-5750 FAX: 303-512-5775 | No Revisions: |
| Horiz. Scale: 1:20 Vert. Scale: As Noted | R-X | Region 1 DCW | Revised: |
| Unit Information Unit Leader Initials | | | Void: |
| PBSJ 4601 DTC Boulevard, Suite 700 Denver, CO 80237 Phone: (303) 221-7275 Fax: (303) 221-7276 | | | |

STRUCTURE CROSS SECTIONS

| | | | |
|---|---|---|---|
| Designer: SLZ | Structure Numbers | | Project No./Code |
| Detailer: SLZ | | | STA 0091-035 |
| Sheet Subset: DRAINAGE | Subset Sheets: 15 of 21 | | 16439 |
| | | | Sheet Number 128 |

21698 9:19:57 AM S:\Tranproj\246220-05\14927\Consultants\Plot_Sets\SHELF\16439DrainageProfileSheet04.dgn

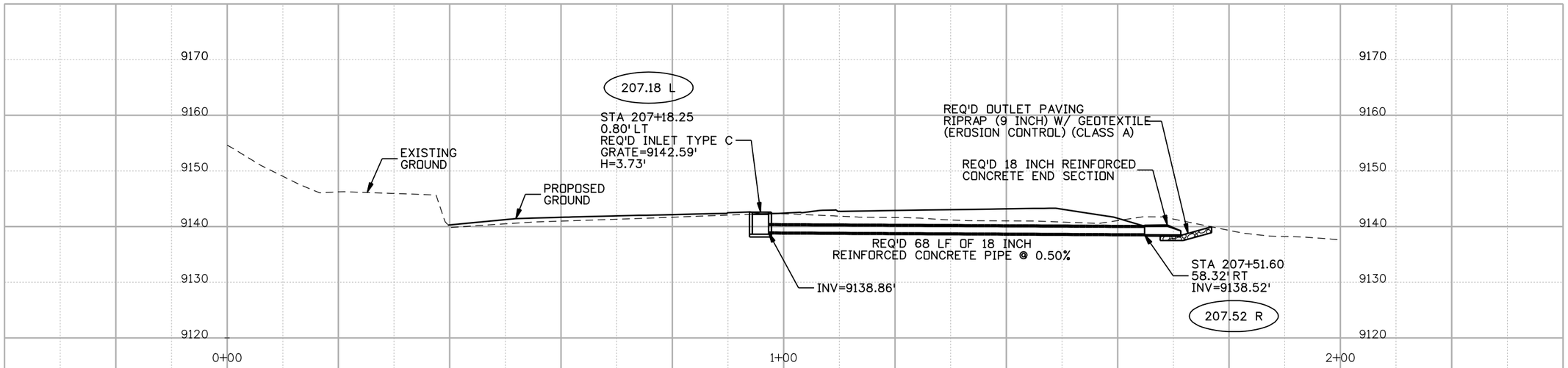


SH 9 STA 207+18.25 LT TO STA 207+51.60 RT

REQUIRED 68 LF OF 18 INCH REINFORCED CONCRETE PIPE
1 EA 18 INCH REINFORCED CONCRETE END SECTIONS
1 EA INLET TYPE C (H=5 FOOT)
4 CY RIPRAP (9 INCH)

HYDRAULIC DATA:

D.A.=1.00 ACRES
Q50=3.40 CFS
DHW=9139.40'
AHW=9142.59'

FOR INFORMATION ONLY:

STRUCTURE EXCAVATION
42 CU YD
STRUCTURE BACKFILL CL1
33 CU YD

REQUIRED:

STRUCTURE EXCAVATION
2 CU YD
EMBANKMENT MATERIAL
2 CU YD

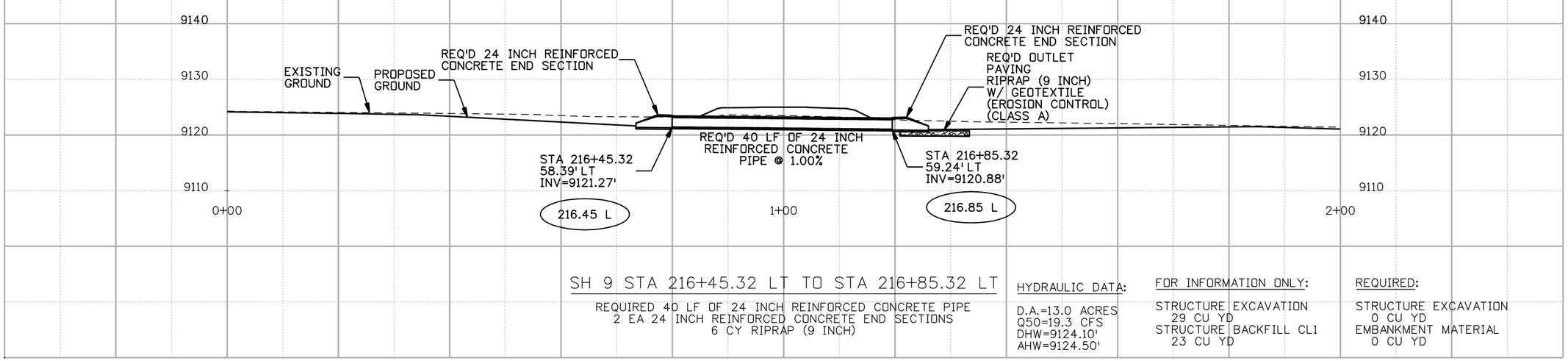


SH 9 STA 216+45.32 LT TO STA 216+85.32 LT

REQUIRED 40 LF OF 24 INCH REINFORCED CONCRETE PIPE
2 EA 24 INCH REINFORCED CONCRETE END SECTIONS
6 CY RIPRAP (9 INCH)

HYDRAULIC DATA:

D.A.=13.0 ACRES
Q50=19.3 CFS
DHW=9124.10'
AHW=9124.50'

FOR INFORMATION ONLY:

STRUCTURE EXCAVATION
29 CU YD
STRUCTURE BACKFILL CL1
23 CU YD

REQUIRED:

STRUCTURE EXCAVATION
0 CU YD
EMBANKMENT MATERIAL
0 CU YD

| | | | |
|---|---|---|---|
| Print Date: 1/26/2009 | Sheet Revisions | Colorado Department of Transportation | As Constructed |
| File Name: 16439DrainageProfileSheet05.dgn | Date: / Comments / Init. | Mountain Residency P.O. Box 399 Dumont, CO 80436 Phone: 303-512-5750 FAX: 303-512-5775 | No Revisions: |
| Horiz. Scale: 1:20 Vert. Scale: As Noted | R-X | Region 1 DCW | Revised: |
| Unit Information Unit Leader Initials | | | Void: |
| PBSJ 4601 DTC Boulevard, Suite 700 Denver, CO 80237 Phone: (303) 221-7275 Fax: (303) 221-7276 | | | |

STRUCTURE CROSS SECTIONS

| | | | |
|---|---|---|---|
| Designer: SLZ | Structure Numbers | | Project No./Code |
| Detailer: SLZ | | | STA 0091-035 |
| Sheet Subset: DRAINAGE | Subset Sheets: 16 of 21 | | 16439 |
| | | | Sheet Number 129 |

21698 9:20:46 AM S:\Tranproj\246220-05\14927\Consultants\Plot_Sets\SHELF\16439DrainageProfileSheet05.dgn

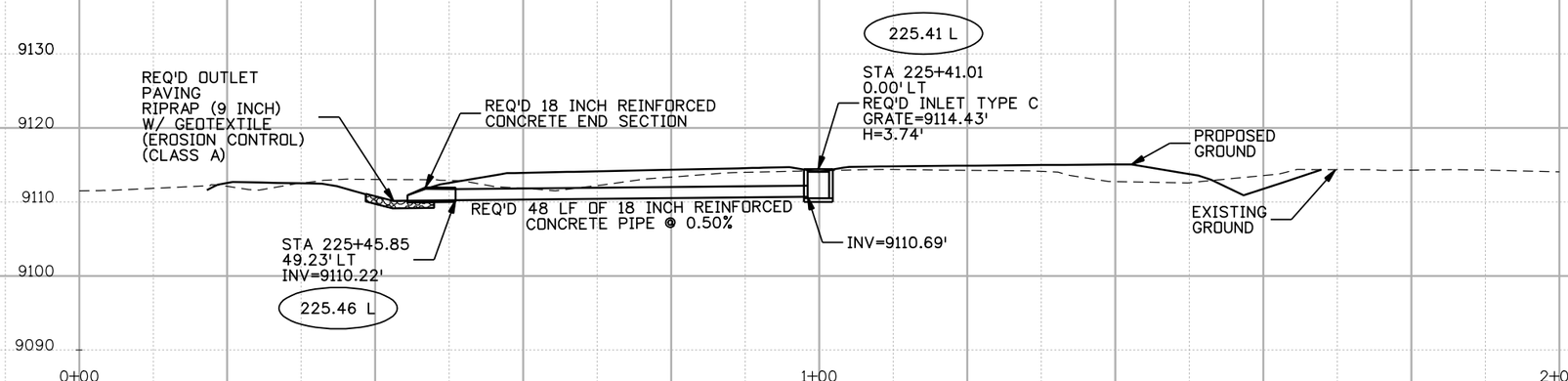


SH 9 STA 225+41.01 LT TO STA 225+45.85 LT

REQUIRED 48 LF OF 18 INCH REINFORCED CONCRETE PIPE
1 EA 18 INCH REINFORCED CONCRETE END SECTIONS
1 EA INLET TYPE C (H=5 FOOT)
4 CY RIPRAP (9 INCH)

FOR INFORMATION ONLY:

STRUCTURE EXCAVATION
28 CU YD
STRUCTURE BACKFILL CL1
24 CU YD

REQUIRED:

STRUCTURE EXCAVATION
2 CU YD
EMBANKMENT MATERIAL
2 CU YD

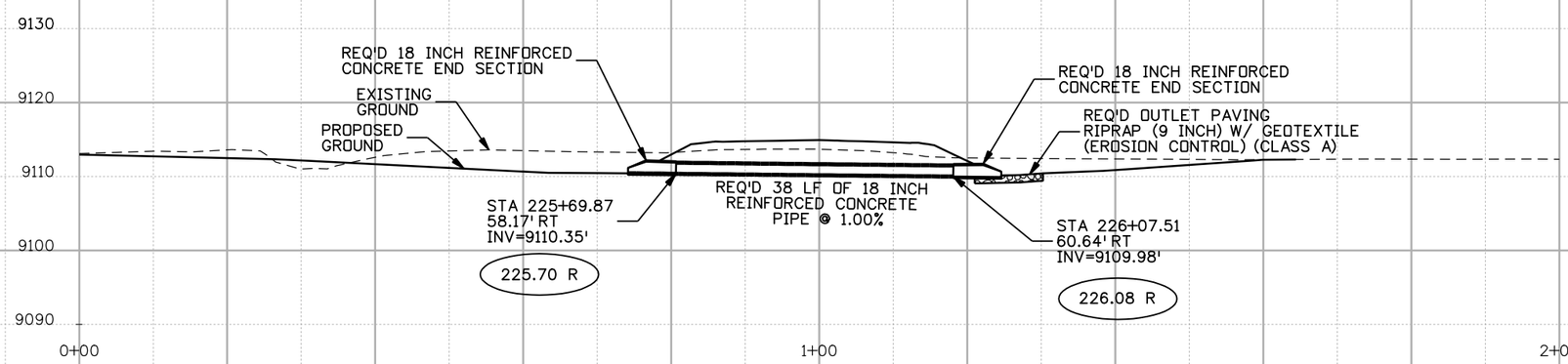


SH 9 STA 225+69.87 RT TO STA 226+07.51 RT

REQUIRED 38 LF OF 18 INCH REINFORCED CONCRETE PIPE
2 EA 18 INCH REINFORCED CONCRETE END SECTIONS
4 CY RIPRAP (9 INCH)

HYDRAULIC DATA:

D.A.=0.80 ACRES
Q50=2.70 CFS
DHW=9111.33'
AHW=9113.00'

FOR INFORMATION ONLY:

STRUCTURE EXCAVATION
30 CU YD
STRUCTURE BACKFILL CL1
19 CU YD

REQUIRED:

STRUCTURE EXCAVATION
3 CU YD
EMBANKMENT MATERIAL
3 CU YD

| | | | |
|---|---|---|---|
| Print Date: 1/26/2009 | Sheet Revisions | Colorado Department of Transportation | As Constructed |
| File Name: 16439DrainageProfileSheet06.dgn | Date: / Comments / Init. | Mountain Residency P.O. Box 399 Dumont, CO 80436 Phone: 303-512-5750 FAX: 303-512-5775 | No Revisions: |
| Horiz. Scale: 1:20 Vert. Scale: As Noted | R-X | Region 1 DCW | Revised: |
| Unit Information Unit Leader Initials | | | Void: |
| PBSJ 4601 DTC Boulevard, Suite 700 Denver, CO 80237 Phone: (303) 221-7275 Fax: (303) 221-7276 | | | |

STRUCTURE CROSS SECTIONS

| | | | |
|---|---|---|---|
| Designer: SLZ | Structure Numbers | | Project No./Code |
| Detailer: SLZ | | | STA 0091-035 |
| Sheet Subset: DRAINAGE | Subset Sheets: 17 of 21 | | 16439 |
| | | | Sheet Number 130 |

21698 9:21:23 AM S:\Tranproj\246220-05\14927\Consultants\Plot_Sets\SHELF\16439DrainageProfileSheet06.dgn

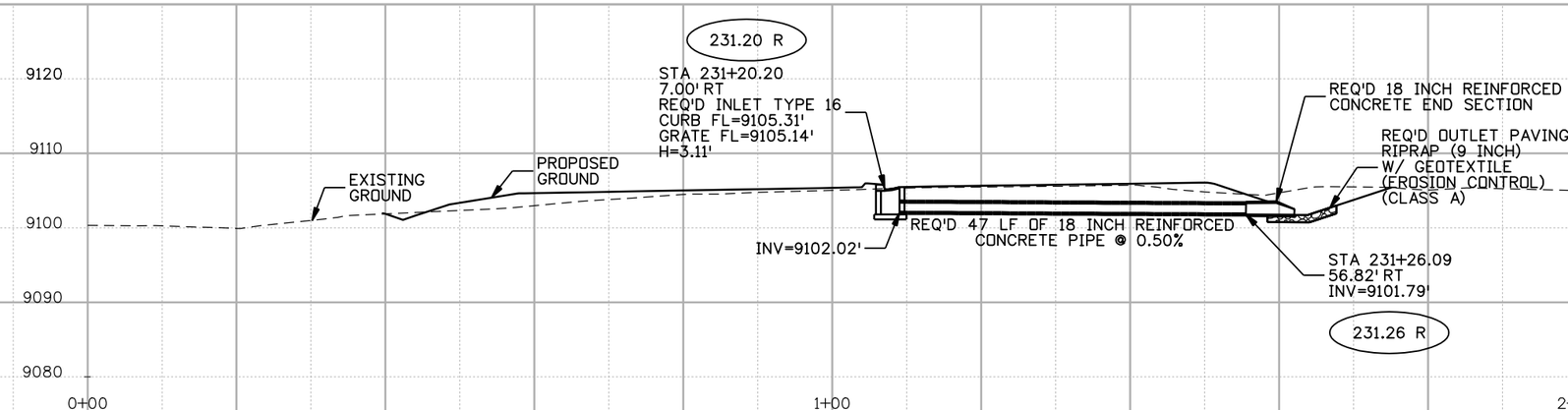


SH 9 STA 231+20.27 RT TO STA 231+26.09 RT

REQUIRED 47 LF OF 18 INCH REINFORCED CONCRETE PIPE
1 EA 18 INCH REINFORCED CONCRETE END SECTIONS
1 EA INLET TYPE 16 (H=5 FOOT)
4 CY RIPRAP (9 INCH)

HYDRAULIC DATA:

D.A.=0.50 ACRES
Q50=2.20 CFS
DHW=9102.55'
AHW=9105.00'

FOR INFORMATION ONLY:

STRUCTURE EXCAVATION
32 CU YD
STRUCTURE BACKFILL CL1
23 CU YD

REQUIRED:

STRUCTURE EXCAVATION
6 CU YD
EMBANKMENT MATERIAL
6 CU YD

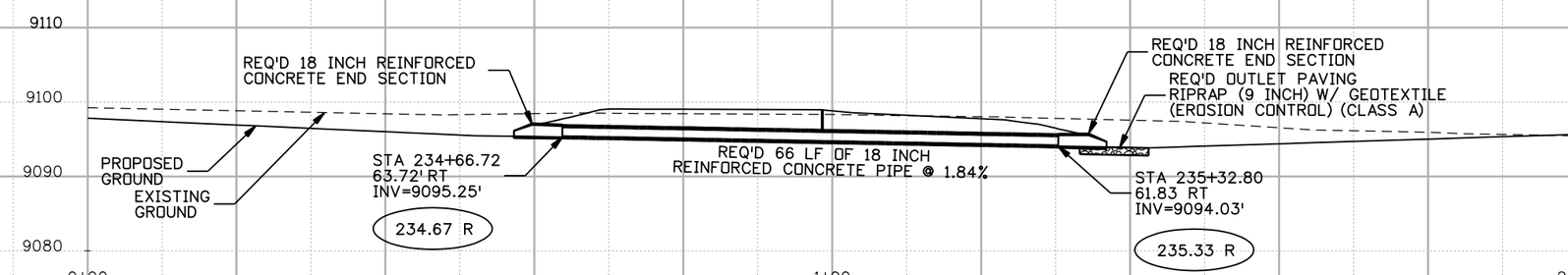


SH 9 STA 234+66.72 RT TO STA 235+32.80 RT

REQUIRED 66 LF OF 18 INCH REINFORCED CONCRETE PIPE
2 EA 18 INCH REINFORCED CONCRETE END SECTIONS
4 CY RIPRAP (9 INCH)

HYDRAULIC DATA:

D.A.=1.70 ACRES
Q50=6.70 CFS
DHW=9096.92'
AHW=9098.50'

FOR INFORMATION ONLY:

STRUCTURE EXCAVATION
49 CU YD
STRUCTURE BACKFILL CL1
32 CU YD

REQUIRED:

STRUCTURE EXCAVATION
9 CU YD
EMBANKMENT MATERIAL
9 CU YD

| | | | |
|---|---|---|---|
| Print Date: 1/26/2009 | Sheet Revisions | Colorado Department of Transportation | As Constructed |
| File Name: 16439DrainageProfileSheet07.dgn | Date: / Comments / Init. | DOT — Mountain Residency P.O. Box 399, Dumont, CO 80436, Phone: 303-512-5750 FAX: 303-512-5775 | No Revisions: |
| Horiz. Scale: 1:20 Vert. Scale: As Noted | R-X | Region 1 DCW | Revised: |
| Unit Information Unit Leader Initials | | | Void: |
| PBSJ 4601 DTC Boulevard, Suite 700, Denver, CO 80237, Phone: (303) 221-7275 Fax: (303) 221-7276 | | | |

STRUCTURE CROSS SECTIONS

| | | | |
|---|---|---|---|
| Designer: SLZ | Structure Numbers | | Project No./Code |
| Detailer: SLZ | | | STA 0091-035 |
| Sheet Subset: DRAINAGE | Subset Sheets: 18 of 21 | | 16439 |
| | | | Sheet Number 131 |

21698 9:21:55 AM S:\Tranproj\246220-05\14927\Consultants\Plot_Sets\SHELF\16439DrainageProfileSheet07.dgn

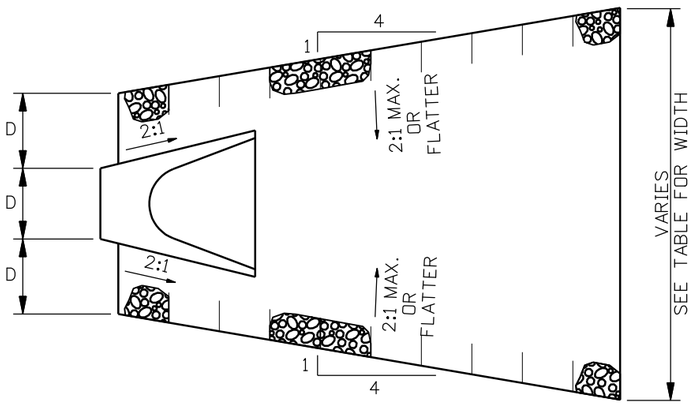


PLAN

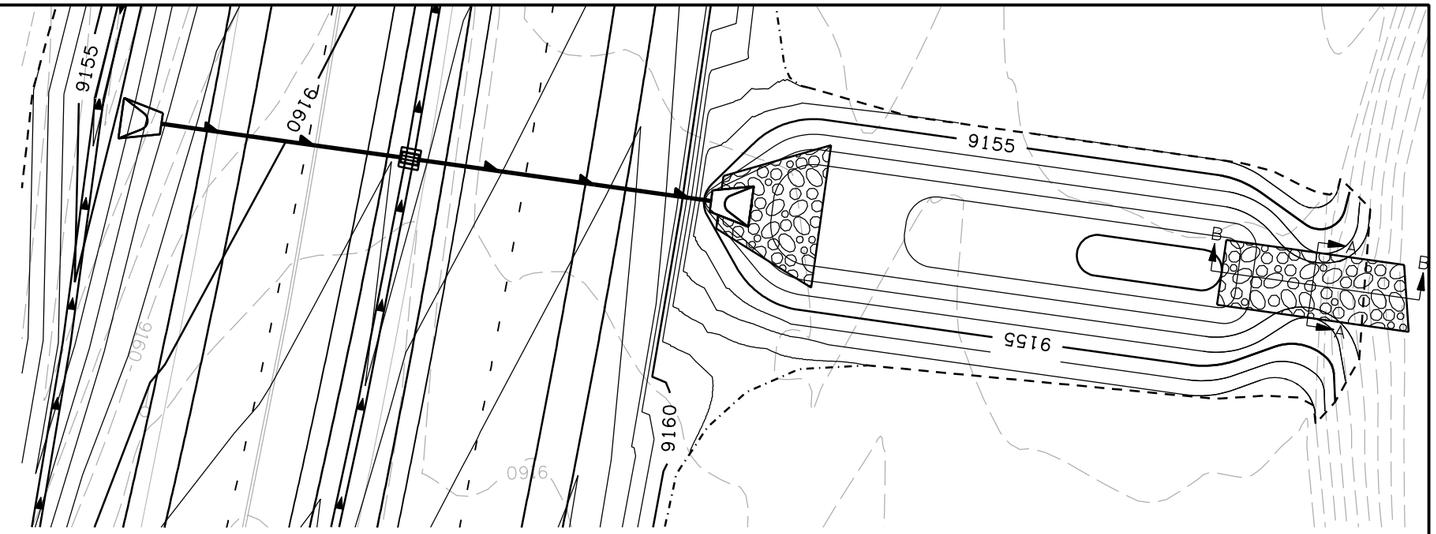


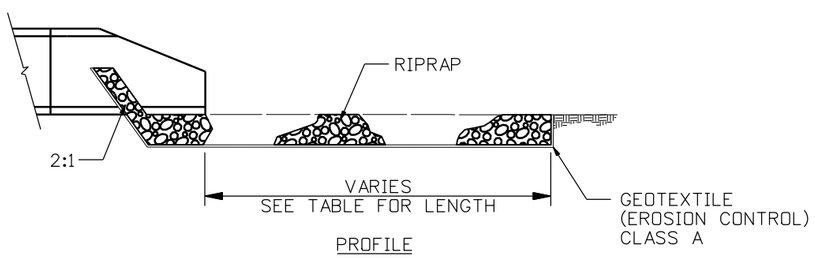


PROFILE

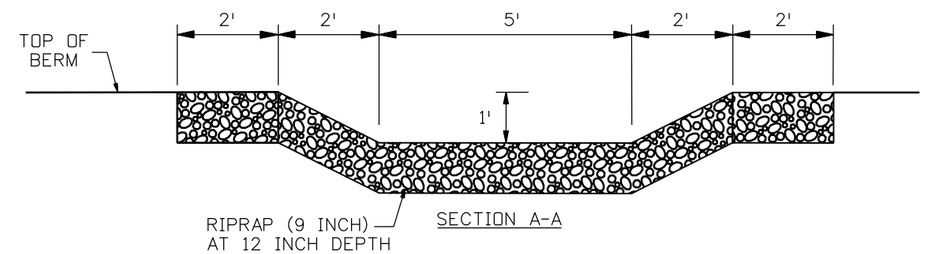


SECTION A-A

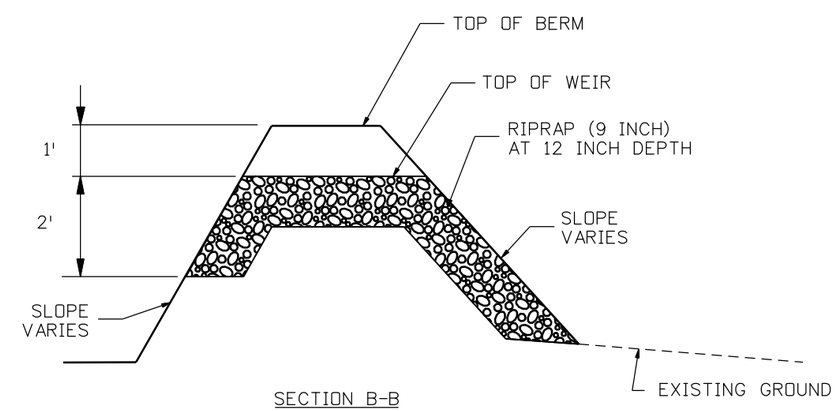


SECTION B-B

APRON DIMENSIONS (RCP)

| PIPE DIA. (D) (IN) | 18 | 24 | 30 | 36 | 42 | 48 |
|---|---|---|---|---|---|---|
| LENGTH (FT) | 6 | 8 | 10 | 12 | 14 | 16 |
| WIDTH (FT) | 10.75 | 13.25 | 16.5 | 19 | 21.5 | 24 |

RIPRAP OUTLET PROTECTION

N.T.S.

21698 9:22:42 AM S:\Tranproj\246220-05\14927\Consultants\Plot_Sets\SHELF\16439DrainageDetail01.dgn

Print Date: 1/26/2009
File Name: 16439DrainageDetail01.dgn
Horiz. Scale: 1:30 Vert. Scale: As Noted
Unit Information Unit Leader Initials

PBSJ 4601 DTC Boulevard, Suite 700
Denver, CO 80237
Phone: (303) 221-7275 Fax: (303) 221-7276

Sheet Revisions

| Date: | Comments | Init. |
|---|---|---|
| | | |
| | | |
| | | |
| | | |

Colorado Department of Transportation
DOT DEPARTMENT OF TRANSPORTATION
Mountain Residency P.O. Box 399
Dumont, CO 80436
Phone: 303-512-5750 FAX: 303-512-5775
Region 1 DCW

As Constructed
No Revisions:
Revised:
Void:

DRAINAGE DETAILS

Designer: SLZ
Detailer: SLZ
Sheet Subset: DRAINAGE
Structure Numbers
Subset Sheets: 19 of 21

Project No./Code
STA 0091-035
16439
Sheet Number 132

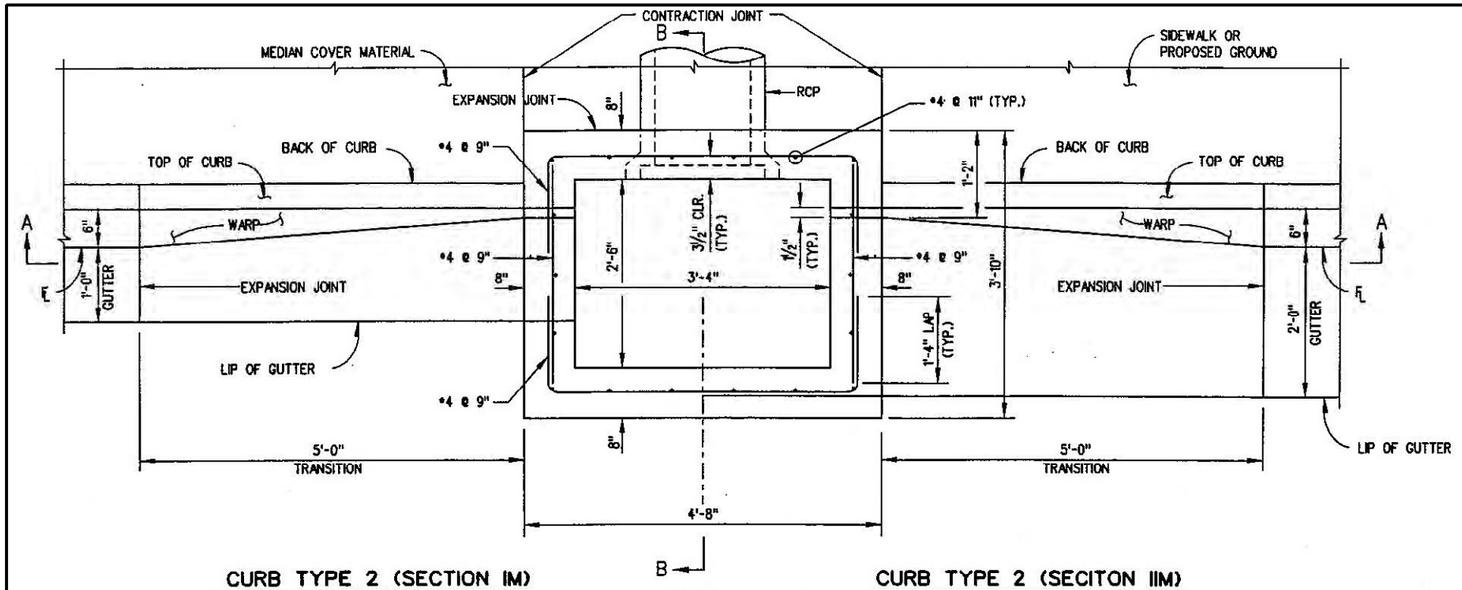


CURB TYPE 2 (SECTION IM)

PLAN

CURB TYPE 2 (SECITON IIM)

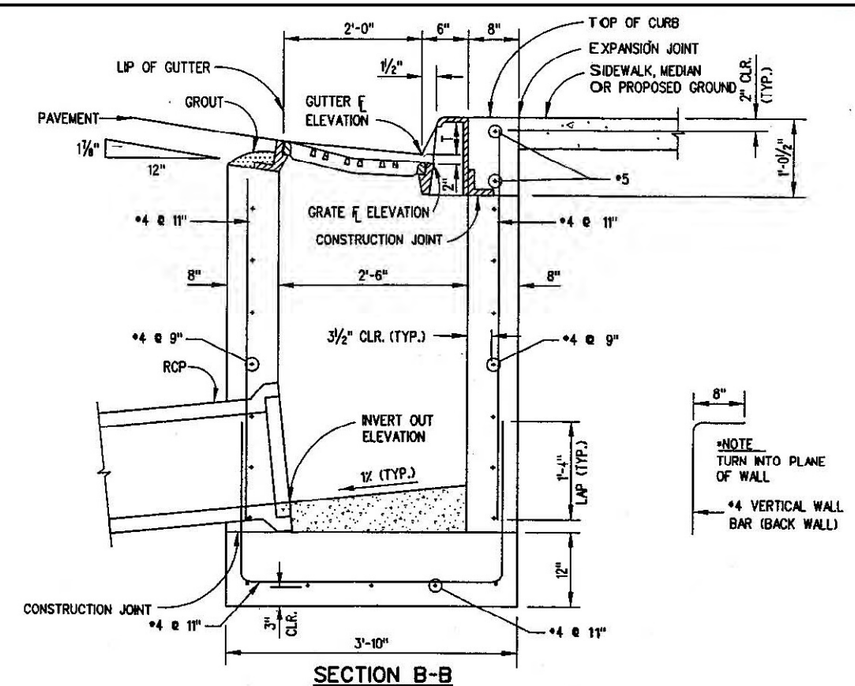


SECTION B-B

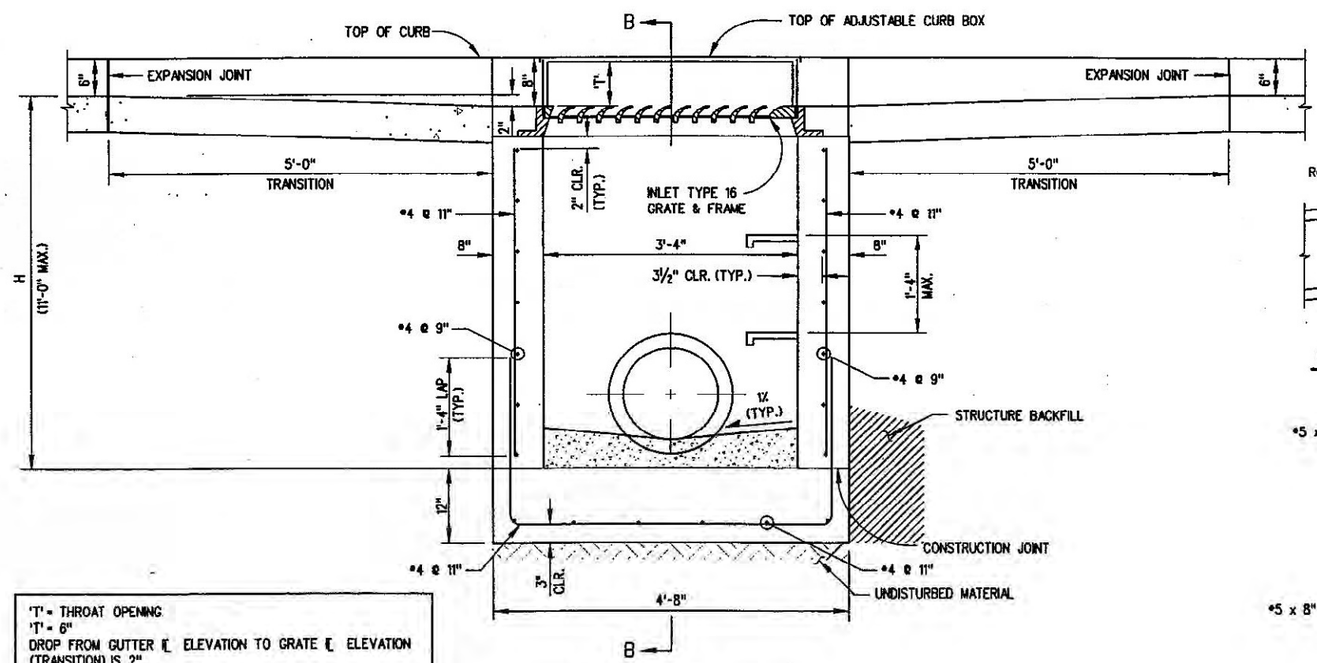


SECTION A-A

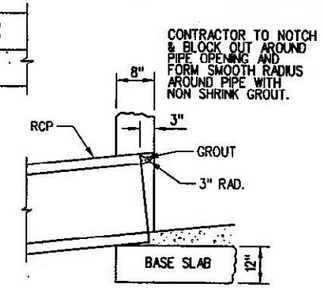


CONNECTOR OUTLET

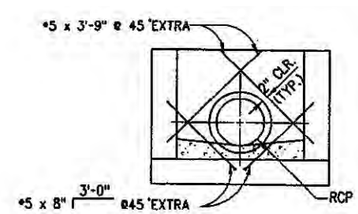


REBAR PLACEMENT AROUND CONNECTOR

## GENERAL NOTES:

1. CAST-IN-PLACE INLETS SHALL BE CONCRETE CLASS B.
2. PRECAST INLETS AND REINFORCEMENT SHALL CONFORM TO ASTM C 478 (AASHTO M 199).
3. FLOW CHANNELS AND INVERTS SHALL BE FORMED BY SHAPING CLASS B CONCRETE OR APPROVED GROUT.
4. EXPOSED CONCRETE CORNERS SHALL BE CHAMFERED ¾".
5. FLOOR SLOPE MAY BE POURED MONOLITHIC WITH BASE.
6. SINCE PIPE ENTRIES INTO THE INLET ARE VARIABLE, THE DIMENSIONS SHOWN ARE TYPICAL. ACTUAL DIMENSIONS FOR CONCRETE AND REINFORCEMENT SHALL BE AS REQUIRED IN THE WORK.
7. SEE INLET TYPE 16 GRATE & FRAME FOR FRAME, GRATE & ADJUSTABLE CURB BOX DETAILS.
8. ALL REINFORCING STEEL SHALL BE ASTM, A-615, GRADE 60 DEFORMED BARS. ALL REINFORCING SHALL BE EPOXY COATED. ALL BARS SHALL HAVE 2 INCH MIN. COVER
9. INLET WALLS SHALL BE FORMED BOTH INSIDE AND OUTSIDE. CASTING OF SIDEWALLS AGAINST EARTH IS NOT PERMITTED.
10. THE CONTRACTOR SHALL STAMP FLOW ARROWS INTO THE TOP SURFACE OF THE INLET BOX SIDEWALLS TO INDICATE THE DIRECTION OF GUTTER FLOW. THESE STAMPED ARROWS SHALL BE 6 INCHES LONG, 1 INCH HIGH AND ⅜ INCH DEEP. FOR INLETS IN SUMP CONDITIONS, THE STAMPED FLOWARROW SHALL INDICATE THE PREDOMINANT DIRECTION OF STORM RUNOFF.
11. STEPS SHALL BE PROVIDED WHEN INLET DIMENSION "H" EXCEEDS 3'-6" AND SHALL BE IN ACCORDANCE WITH AASTHO M 199.

| | | | | | |
|---|---|---|---|---|---|
| Print Date: 1/26/2009 | Sheet Revisions | Colorado Department of Transportation | As Constructed | TYPE 16 INLET DETAILS | Project No./Code |
| File Name: 16439Type 16 inlet detail.dgn | Date: / Comments / Init. | Mountain Residency P.O. Box 399, Dumont, CO 80436, Phone: 303-512-5750 FAX: 303-512-5775 | No Revisions: | | STA 0091-035 |
| Horiz. Scale: 1:20 Vert. Scale: As Noted | R-X | | Revised: | Designer: SLZ / Structure Numbers | 16439 |
| Unit Information Unit Leader Initials | | Region 1 DCW | Void: | Detailer: SLZ | |
| PBSJ 4601 DTC Boulevard, Suite 700, Denver, CO 80237, Phone: (303) 221-7275 Fax: (303) 221-7276 | | | | Sheet Subset: DRAINAGE / Subset Sheets: 20 of 21 | Sheet Number 133 |

21698 9:23:57 AM S:\Tranproj\246220-05\14927\Consultants\Plot_Sets\SHELF\16439Type 16 inlet detail.dgn

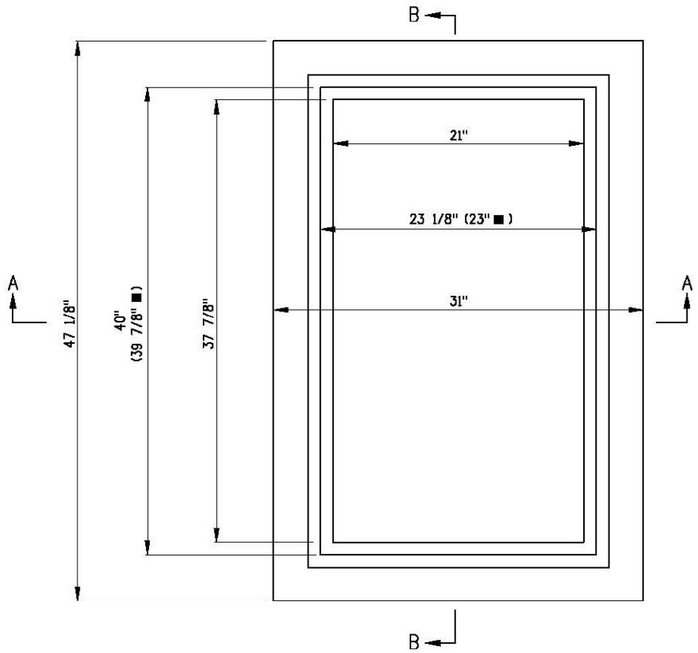


PLAN - FRAME

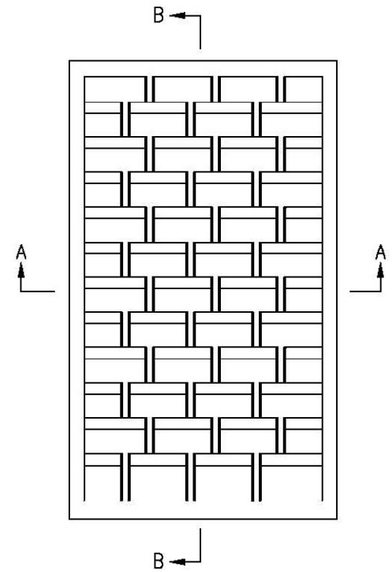


PLAN - GRATE

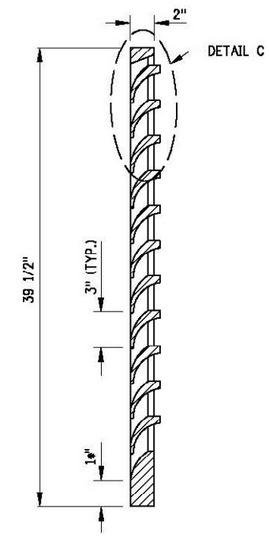


SECTION E-E

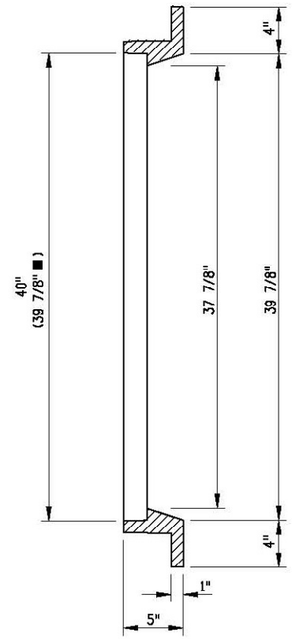


SECTION B-B

## GENERAL NOTES:

1. CAST IRON SHALL CONFORM TO ASTM A48. (CLASS 35B, MINIMUM)
2. CASTING SHALL COMPLY WITH FEDERAL SPECIFICATION RR-F-621D FOR CASTING PROOF LOADING (HEAVY DUTY).
3. ALL CASTINGS REQUIRE INDIVIDUAL APPROVAL/CERTIFICATION FROM THE ENGINEER.
4. CASTINGS SHALL NOT BE DIPPED OR PAINTED PRIOR TO FINAL INSPECTION. ONCE INDIVIDUAL CASTINGS ARE CHECKED AND APPROVED BY THE ENGINEER FOR PROJECT USAGE, THEY SHALL BE COATED WITH AN APPROVED MATERIAL.

## FIGURE 1
## NO. 16 INLET GRATE & FRAME

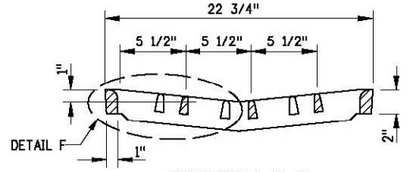


SECTION D-D

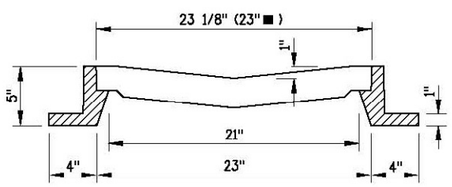


SECTION A-A

■ CLEAR SEAT OPENING

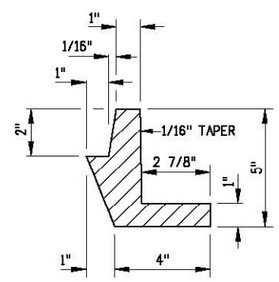


DETAIL C

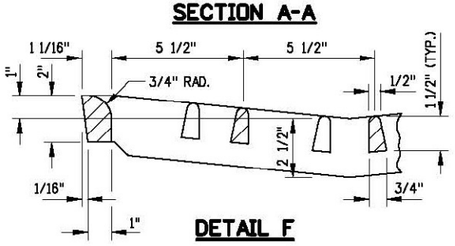


DETAIL F

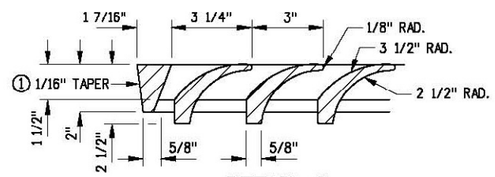


DETAIL G

## FIGURE 2
## ADJUSTABLE CURB BOX
MINIMUM CURB OPENING AREA - 150 SQ. IN.

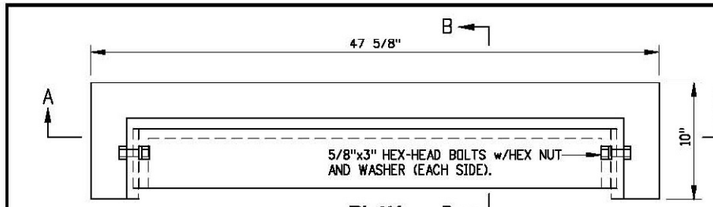


PLAN

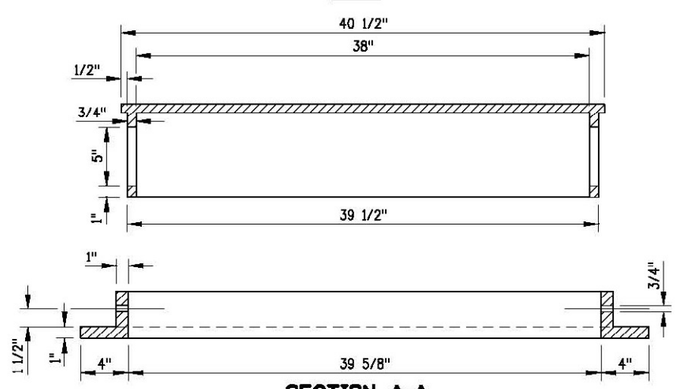


SECTION A-A

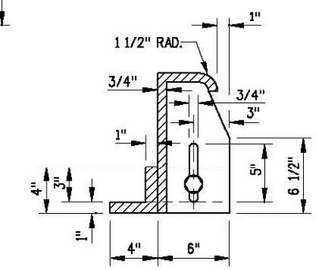


SECTION B-B

| | | | | | |
|---|---|---|---|---|---|
| Print Date: 1/26/2009 | | Sheet Revisions | | | |
| File Name: 16439Type 16 inlet detail.dgn | | Date: | Comments | Init. | |
| Horiz. Scale: 1:20 Vert. Scale: As Noted | R-X | | | | |
| Unit Information Unit Leader Initials | | | | | |
| PBSJ 4601 DTC Boulevard, Suite 700 Denver, CO 80237 Phone: (303) 221-7275 Fax: (303) 221-7276 | | | | | |

Colorado Department of Transportation
DOT
Mountain Residency P.O. Box 399
Dumont, CO 80436
Phone: 303-512-5750 FAX: 303-512-5775
Region 1 DCW

| As Constructed | TYPE 16 INLET GRATE & FRAME DETAILS | | | Project No./Code |
|---|---|---|---|---|
| No Revisions: | | | | STA 0091-035 |
| Revised: | Designer: SLZ | Structure Numbers | | 16439 |
| Void: | Detailer: SLZ | | | |
| | Sheet Subset: DRAINAGE | Subset Sheets: | 21 of 21 | Sheet Number 134 |

21698 9:24:39 AM S:\Tranproj\246220-05\14927\Consultants\Plot_Sets\SHELF\16439Type 16 inlet detail.dgn

## CHANNEL CURVE INFORMATION

| C-1 | C-2 |
|---|---|
| Δ30° 03'04.07" | Δ25° 23'12.90" |
| T13.42' | T11.26' |
| L26.22' | L22.15' |
| R50.00' | R50.00' |

| C-3 | C-4 |
|---|---|
| Δ10° 54'01.40" | Δ15° 23'52.98" |
| T9.54' | T13.52' |
| L19.02' | L26.87' |
| R100.00' | R100.00' |

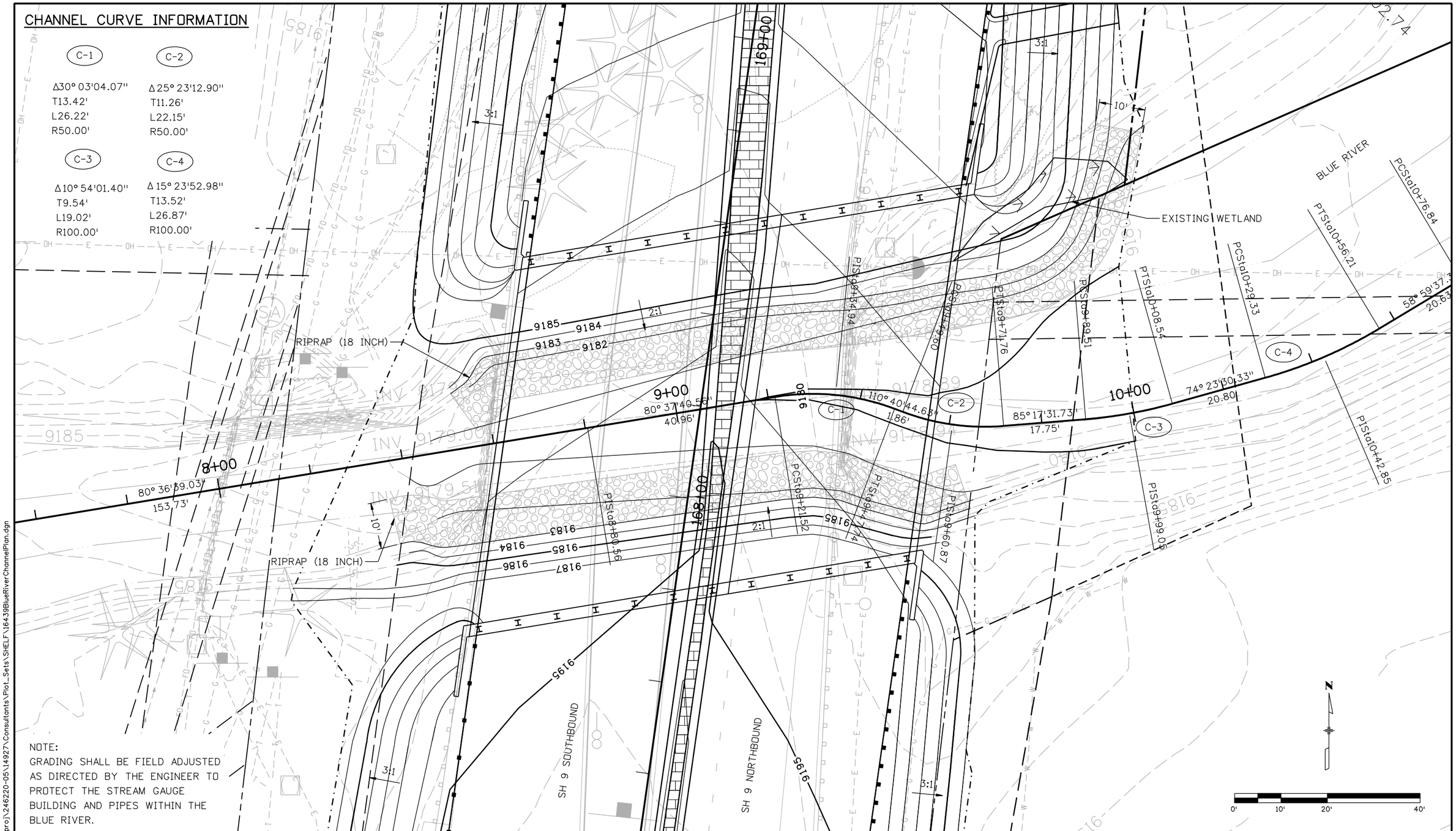


NOTE:
GRADING SHALL BE FIELD ADJUSTED AS DIRECTED BY THE ENGINEER TO PROTECT THE STREAM GAUGE BUILDING AND PIPES WITHIN THE BLUE RIVER.

21698 9:26:00 AM S:\Tranproj\246220-05\14927\Consultants\Plot_Sets\SHELF\16439BlueRiverChannelPlan.dgn

Print Date: 1/26/2009
File Name: 16439BlueRiverChannelPlan.dgn
Horiz. Scale: 1:20 Vert. Scale: As Noted
Unit Information Unit Leader Initials

PBSJ 4601 DTC Boulevard, Suite 700 Denver, CO 80237 Phone: (303) 221-7275 Fax: (303) 221-7276

R-X

| Sheet Revisions | | |
|---|---|---|
| Date: | Comments | Init. |
| | | |
| | | |
| | | |
| | | |

Colorado Department of Transportation
DOT
Mountain Residency P.O. Box 399
Dumont, CO 80436
Phone: 303-512-5750 FAX: 303-512-5775
Region 1 DCW

As Constructed
No Revisions:
Revised:
Void:

BLUE RIVER CHANNEL GRADING PLAN

Designer: SLZ
Detailer: SLZ
Sheet Subset: CHANNEL
Structure Numbers
Subset Sheets: 1 of 2

Project No./Code
STA 0091-035
16439
Sheet Number 135

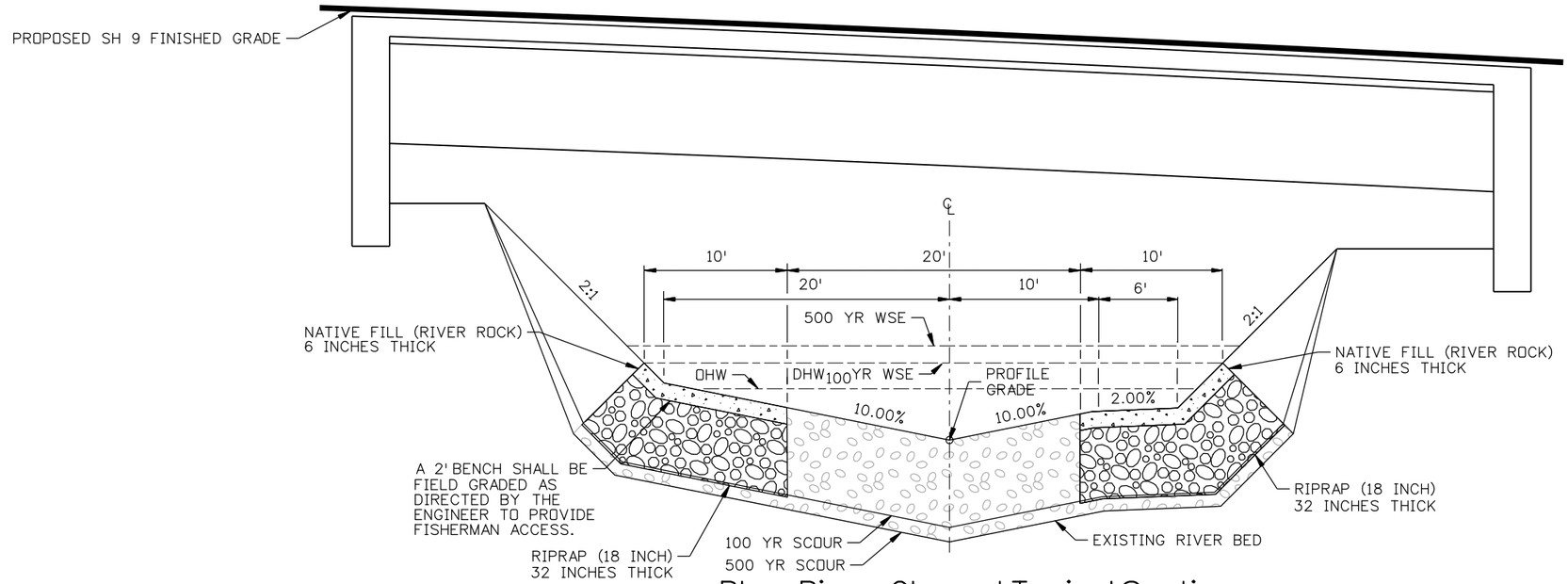


## Blue River Channel Typical Section

Looking Up Stream-Not to Scale

## HYDRAULIC DATA

$D_{AREA}$ = 53 SQ MI

$Q_{100}$ = 900 CFS

$Q_{500}$ = 1400 CFS

$DHW_{100}$ = 2.7 FT

$HW_{500}$ = 3.3 FT

OHW = 1.2 FT

$VEL_{100}$ = 13.1 FPS

$VEL_{500}$ = 14.7 FPS

100 YR SCOUR = 3.0 FEET

500 YR SCOUR = 3.5 FEET

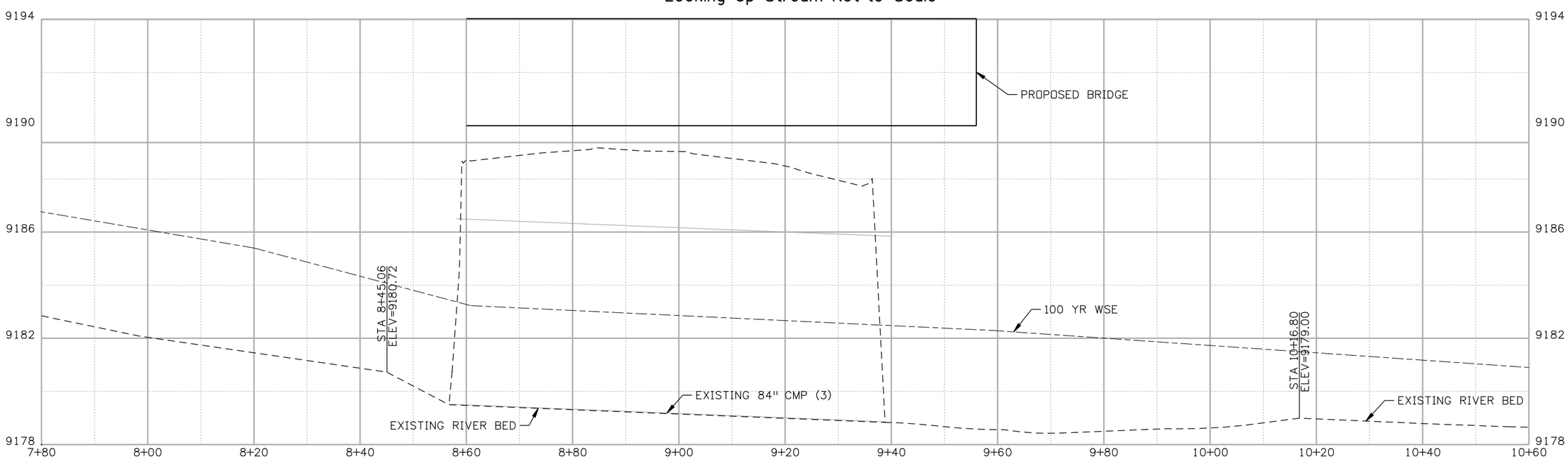


| | | | |
|---|---|---|---|
| Print Date: 1/26/2009 | Sheet Revisions | Colorado Department of Transportation | As Constructed |
| File Name: 16439BlueRiverChannelProfile&Typical.dgn | Date: / Comments / Init. | Mountain Residency P.O. Box 399, Dumont, CO 80436, Phone: 303-512-5750 FAX: 303-512-5775 | No Revisions: |
| Horiz. Scale: 1:20 Vert. Scale: As Noted | R-X | Region 1 DCW | Revised: |
| Unit Information Unit Leader Initials | | | Void: |
| PBSJ 4601 DTC Boulevard, Suite 700, Denver, CO 80237, Phone: (303) 221-7275 Fax: (303) 221-7276 | | | |

BLUE RIVER CHANNEL
TYPICAL SECTION & PROFILE

| | | | |
|---|---|---|---|
| Designer: | SLZ | Structure Numbers | |
| Detailer: | SLZ | | |
| Sheet Subset: | CHANNEL | Subset Sheets: | 2 of 2 |

Project No./Code: STA 0091-035

16439

Sheet Number 136

21698 9:26:38 AM S:\Tranproj\246220-05\14927\Consultants\Plot_Sets\SHELF\16439BlueRiverChannelProfile&Typical.dgn

## 1. Site Description

Additional information for permitted projects. For information only to fulfill the CDPS-SCP (Colorado Discharge Permit – Stormwater Construction Permit)

A. Project Site Description: Project is to widen State Highway 9 from two lanes to four lanes from Tiger Road north to Agape Church. Project includes utility relocations, asphalt paving, bridge construction, curb and gutter, installation of storm drain system, water quality/sediment pond installation, shared use path relocation and traffic signal replacement. Roadway widening includes excavations and embankments. Shared use path includes minor excavations and embankments. All disturbed surfaces will be seeded and mulched. Project will construct State Highway 9 to the ultimate configuration.

B. Proposed Sequencing For Major Activities:

1a. Utility relocation
1b. Embankment for roadway widening
1c. Water quality/sediment pond installation
1d. Storm drain system installation
2. Construct new bridge and channel work
3. Curb and gutter
4. Asphalt paving
5. Shared use path relocations
6. Traffic signal
7. Signing and striping

C. Acres Of Disturbance:

Total area of construction site: 62 acres
Total area of disturbance: 39 acres
Acreage of seeding: 16 acres

D. Existing Soil Data: Based on the Natural Resources Conservation Service (NRCS) Soil Survey of Summit County, Colorado the soils in the vicinity of State Highway 9 are comprised of the Frisco-Peeler Complex and the Quander Cobbly Loam associations. The Frisco-Peeler Complex and the Quander Cobbly Loam soils are both classified as being a Type B hydrologic soil group. These associations are generally deep, nearly level to moderately steep, with sandy and gravelly soils on the uplands and loamy and sandy soils on floodplains and terraces

E. Existing Vegetation, Including Percent Cover: Prior to construction disturbance the Contractor shall create photographic documentation and measure existing plant cover: 1 transect/5 acres of disturbance in accordance with Section 4:11:1 item (2) of the CDOT Erosion Control and Stormwater Quality guide (2002). Measurements will not be paid separately but included in the price of the work.

Date of survey: To be determined by Contractor

F. Potential Pollutants Sources: See First Construction Activities under Potential Pollutant Sources. The ECS shall prepare a list of all potential pollutants and their locations in accordance with subsection 107.25.

G. Receiving Water:
1. Outfall locations:

| SIZE | TYPE | LOCATION | OUTFALL | RECEIVING WATERS |
|---|---|---|---|---|
| 18” | RCP | 133+92 | West ditch | Blue River |
| N/A | Roadside Ditch | 140+75 LT | Offsite ditch | Blue River |
| 18” | RCP | 152+83 | West ditch | Blue River |
| 18” | RCP | 161+99 | West ditch | Blue River |
| N/A | Roadside Ditch | 167+75 LT | West ditch | Blue River |
| N/A | Roadside Ditch | 167+75 RT | East ditch | Blue River |
| 24” | RCP | 174+92 | Sheet flow East side | Blue River |
| 18” | RCP | 177+98 | Sheet flow East side | Blue River |
| 42” | RCP | 190+03 | Water quality Pond | Blue River |
| 24” | RCP | 197+94 | Sheet flow East side | Blue River |
| 24” | RCP | 207+52 | Sheet flow East side | Blue River |
| 18” | RCP | 225+41 | East ditch | Unnamed tributary to Blue River |
| N/A | Roadside Ditch | 234+60 | West ditch | Blue River |
| 18” | RCP | 231+26 | East ditch | Unnamed tributary to Blue River |
| N/A | Roadside Ditch | 235+60 | East ditch | Unnamed tributary to Blue River |

2. Names of receiving water(s) on site and the ultimate receiving water: Blue River
3. Distance ultimate receiving water is from project: Varies, Blue River crosses under State Highway 9 via a bridge
4. Does the receiving water have an approved TMDL: No

H. Allowable Non-Stormwater Discharges:
1. Groundwater and stormwater dewatering: Discharge to the ground of water from construction dewatering activities may be authorized provided that:
   a. The source is groundwater and/or groundwater combined with stormwater that does not contain pollutants.
   b. The source and BMPs are identified in the SWMP.
   c. Discharges do not leave the site as surface runoff or to surface waters.
2. If discharges do not meet the above criteria a separate permit from the Department of Health will be required. Contaminated groundwater requiring coverage under a separate permit may include groundwater contaminated with pollutants from a landfill, mining activities, industrial pollutant plumes, underground storage tank, etc.

I. Environmental Impacts:
1. Wetland Impacts: Yes
2. Stream Impacts: Yes
3. Threatened and Endangered Species: None

## 2. Site Map Components

Pre-construction

A. Construction Site Boundaries: See Erosion Control Plan/SWMP Site Map
B. All Areas Of Ground Surface Disturbance: See Erosion Control Plan/SWMP Site Map
C. Areas Of Cut And Fill: See Erosion Control Plan/SWMP Site Map
D. Location Of All Structural BMPs Identified In The SWMP: See Erosion Control Plan/SWMP Site Map
E. Location Of Non-Structural BMPs As Applicable In The SWMP: See Erosion Control Plan/SWMP Site Map
F. Springs, Stream, Wetlands And Other Surface Water: See Erosion Control Plan/SWMP Site Map
G. Protection Of Trees, Shrubs, Cultural Resources And Mature Vegetation: See Erosion Control Plan/SWMP Site Map

## 3. SWMP Administrator for Design: CDOT Landscape Architect/PBS&J Project Engineer

## 4. Stormwater Management Controls First Construction Activities

The Contractor Shall Perform The Following:

A. Designate A SWMP Administrator/Erosion Control Supervisor (To be filled out at time of construction; designate the individual(s) responsible for implementing, maintaining and revising SWMP, including the title and contact information. The activities and responsibilities of the administrator shall address all aspects of the projects SWMP.)

B. Potential Pollutant Sources
Evaluate, identify and describe all potential sources of pollutants at the site in accordance with subsection 107.25 and place in the SWMP notebook. All BMPs related to potential pollutants shall be shown on the SWMP site map by the contractor's ECS.

C. Best Management Practices (BMPs) For Stormwater Pollution Prevention Phased BMP Implementation

During design: Fields are marked when used in the SWMP. During construction: The ECS shall update the checked boxes to match site conditions. Clearly describe the relationship between the phases of construction and the implementation of BMP controls. Add a narrative to the table or to the site map describing why the BMPs are being used in specific locations

**Structural BMP practices for erosion and sediment control**; practices may include, but are not limited to:

EROSION LOGS

General Applications:
Erosion logs are used to capture and filter sediment laden run-off from disturbed areas during construction.

Project Specific application:

Inlet/Outlet Protection

Erosion logs shall be placed at existing inlets where disturbance may be occurring adjacent to the pipe and causing sediment laden water to enter the pipe. Logs shall be placed prior to work commencing at these locations to filter sediment laden runoff.

For new inlets, erosion logs shall be placed once the pipe is in place to prevent sediment laden water from entering it.

Where the slope has been worked above a new and/or existing pipe (inlet/outlet) and sediment may enter the pipe from above, a log shall wrap the top of the pipe and run down slope to direct water away from the pipe. Erosion logs shall be j-hooked or placed in such a manner at these locations so that sediment laden water will not go around the ends of logs and directly into pipe.

Ditch checks/stabilization of ditches

Erosion logs shall be placed in areas indicated in the plans, or as directed, immediately after ditch grading has been completed. Ditches shall be permanently stabilized within 48 hours of completion during the seeding season. When seeding cannot occur due to seasonal constraints then mulch and mulch tackifier shall be placed along with ditches checks at the intervals specified. If erosion occurs in ditch then mulch and mulch tackifier shall be replaced by a straw/coconut blanket as a temporary measure. Once seeding can occur the blanket shall be removed and disposed of; new BMP's (logs, blankets, mulch/mulch tackifier) shall be placed as directed. Seeding and crimping in ditch lines shall follow contour; crimping and drill rows running down a ditch line will not be allowed.

Toes of slopes

Erosion logs are to be placed prior to work commencing for all toes of slopes locations. Logs shall be placed on the contour with the ends j-hooked to prevent sediment laden runoff from running around the ends of the logs and causing erosion.

Protection of wetlands and mature trees

Prior to construction commencing, orange plastic fence shall be placed adjacent to wetlands; erosion logs shall be placed between plastic fence and disturbance area. Logs shall be placed to direct flows away from or filter water running into wetlands from disturbance areas. A combination of erosion logs and fence (plastic) shall be used as directed by the engineer and/or CDOT Landscape Architect to protect mature trees.

Erosion logs shall be installed prior to performing any construction work that disturbs vegetation.

Erosion logs shown in SWMP Site Map are a graphical representation only and do not represent the actual length or configuration of erosion logs be installed. Erosion logs shall be placed along contours with sufficient length to intercept all runoff that directly enters Waters of US and shall be j-hooked at the ends.

PERMANENT BASINS

The water quality ponds will be constructed first and used as temporary sediment basin for roadway runoff during construction. When a substantial portion of the project has been completed the contractor shall remove sediment from the pond and return pond to grade shown on the plans. See subsection 208.05 for further requirements.

INLET PROTECTION

General applications
Used to intercept and filter sediment-laden runoff and prevent it from entering storm drainage systems. Used as a temporary feature.

Storm drain inlet protection (Type 1 or Type 2) shall be placed immediately after installation of Inlet Type 16. See SWMP Site Map and Grading and Drainage Plans for locations of inlets.

Erosion logs shall be placed immediately after installation of Inlet Type C and Inlet Type D, see SWMP Site Map and Grading and Drainage Plans for locations.

During construction, the erosion control supervisor shall place the appropriate BMP at the inlet openings to prevent sediment and/or pollutants from entering. Storm drain inlet protection is used to minimize the amount of sediment laden water entering the storm drain system.

OUTLET PROTECTION

General Application
Outlet protection is used as an energy dissipation device to prevent scour and erosion at the pipe outlet by reducing the velocity and energy of the concentrated flow.

Project specific application:
Riprap shall be placed at the outlet of pipes, see SWMP Site Map and Drainage and Grading Plans for locations, immediately after the pipe is installed.

CONCRETE WASHOUTS

Facilities or designated work areas where concrete waste is generated from demolition activities; where concrete is used as a construction material; where concrete trucks or concrete coated equipment are washed on site as permitted by the engineer; where slurries containing Portland cement concrete (PCC) or asphalt concrete are generated: and where mortar-mixing areas exist.

It is estimated that two (2) concrete washout structures will be required on the project. Washout areas shall be checked by the ECS and maintained as required. When approved by the engineer an “urban” concrete washout structure may be used. Urban concrete washout examples are wooden boxes lined with heavy duty plastic or waterproof 55 gallon drums. After use the structure must be removed from the project site.

STABILIZED CONSTRUCTION ENTRANCE

Used to reduce the amount of mud tracked onto paved public roads by vehicles or runoff leaving the construction site. Used as a temporary feature.

It is estimated that two (2) stabilized construction entrances will be required as directed. See CDOT Standard Plan M-208-01 for detail.

RIPRAP LINED DITCHES

Riprap lined ditches will be required as permanent erosion control measures and will be used on ditch slopes that are between 0 and 5 percent where flow velocities exceed 4 feet per second and in ditch slopes greater than 5 percent where flow velocities exceed 3 feet per second. Riprap is to be placed within 48 hours of the ditch grading has been completed.

| BMP | TYPE OF CONTROL | BMP AS DESIGNED | IN USE ON SITE | FIRST CONSTRUCTION ACTIVITIES | DURING CONSTRUCTION | INTERIM/FINAL STABILIZATION |
|---|---|---|---|---|---|---|
| | | | | | | |
| Earth Berm/Diversion | erosion | | | | | |
| Check Dams | sediment | | | | | |
| Silt Fence | sediment | | | | | |
| Erosion Logs | sediment | X | | X | X | |
| Temporary Sediment Trap/Basin | sediment | | | X | X | |
| Permanent Sediment Trap/Basin | sediment | X | | | X | X |
| Embankment Protector | erosion | X | | | X | X |
| Inlet Protection | erosion | X | | X | X | |
| Outlet Protection | erosion | X | | | X | X |
| Concrete Washouts | construction | X | | | X | |
| Stabilized Construction Entrance | construction | X | | X | X | |
| Dewatering | sediment | | | | X | |
| Temporary Stream Crossing | erosion | | | | | |
| Other | | | | | | |

**NON-STRUCTURAL BMP practices for erosion and sediment control**; practices may include, but are not limited to:

SURFACE ROUGHENING/GRADING TECHNIQUES

Soil surface roughening, terracing and rounding at tops of cuts, transitions and roadway ditches to facilitate plant establishment and minimize soil erosion. Used to temporarily stabilize disturbed areas and to protect from wind and water erosion. Disturbed surfaces shall be left in the roughened condition at all times by equipment tracking, scarifying or disking the surface on the contour with a 2 to 4 inch minimum variation in the soil surface. Round channel bottoms to avoid V-shaped ditches and round the tops of cuts and the toes of fill slopes.

SEEDING PERMANENT

Seeding is used to control runoff and erosion on disturbed areas. Drill seeding shall occur on slopes flatter than 2:1 and shall occur on the contour of the slope. Completed areas shall be seeded within 48 hours during seeding season. Seeded areas shall be inspected frequently for areas of failure. Slopes that are too steep for drill seeding shall have seed broadcast at double the rate and raked into the surface.

MULCH/MULCH TACKIFIER

Mulching and mulch tackifier is used for temporary erosion control on incomplete slope, stockpiles and on slopes when seeding is not allowed due to seasonal constraints. Also used to cover permanent or temporary seeded areas.

SOIL RETENTION BLANKET

Shall be placed in areas shown on the Site map or as directed; all slopes 3:1 and steeper shall receive blanket. Slope shall be properly prepared prior to placement of blanket. If rills, rocks, etc. are present they shall be removed prior to placing blanket to ensure blanket is placed on the soil with no tenting; see specification and M&S Standards. Plastic soil retention blankets will be placed in all ditches exceeding 2% and straw/coconut soil retention blankets will be used on all slopes steeper than 3:1.

VEGETATIVE BUFFER STRIPS

Existing vegetation shall be used as a BMP on the project. Existing vegetation helps with erosion and sediment control and protects water quality. Areas of preserved vegetation shall be marked on the Site map by the ECS. The amount of sediment reaching buffer strips shall be kept to a minimum by placing temporary and permanent erosion control features on disturbed slopes. If sediment does enter buffer strips and covers existing vegetation it shall be cleaned and re-seeded as directed. Sediment in vegetative ditches shall be avoided to prevent sediment laden water from exiting the project site. All vegetative ditch outfalls (from CDOT right of way) shall be protected with erosion logs or berms as shown in the plans or as directed.

PROTECTION OF TREES

Existing tress in the vicinity of the work shall be protected with plastic fencing.

PROTECTION OF MATURE VEGETATION

Existing shrubs and vegetation in the vicinity of the work shall be protected with plastic fencing.

| BMP | TYPE OF CONTROL | BMP AS DESIGNED | IN USE ON SITE | FIRST CONSTRUCTION ACTIVITIES | DURING CONSTRUCTION | INTERIM/FINAL STABILIZATION |
|---|---|---|---|---|---|---|
| | | | | | | |
| Surface Roughening/Grading Techniques | Erosion | X | | | X | |
| Seeding Permanent | Erosion | X | | | | X |
| Seeding Temporary | Erosion | X | | | X | |
| Mulch/Mulch Tackifier | Erosion | X | | | X | X |
| Soil Binder | Erosion | | | | | |
| Soil Retention Blanket | Erosion | X | | | X | X |
| Vegetative Buffer Strips | Erosion | X | | X | X | X |
| Protection Of Trees | Protection | X | | X | X | |
| Protection Of Mature Vegetation | Protection | X | | X | X | |
| Other | | | | | | |

- Erosion control devices are used to limit the amount of erosion on site.
- Sediment control devices are designed to capture sediment on the project site,
- Construction control are BMPs related to construction access and staging.
- BMP locations are indicated on the site map.
- BMP installation details and general narratives are in the SWMP notebook.

D. Offsite Drainage (Run On Water)
   1. Describe and record BMPs on the SWMP site map that have been implemented to address run-on water in accordance with subsection 208.03.

E. Stabilized Construction Entrance/Vehicle Tracking Control
   1. BMPs shall be implemented in accordance with subsection 208.04.

F. Perimeter Control
   1. Perimeter control shall be established as the first item on the SWMP to prevent the potential for pollutants leaving the construction site boundaries, entering the stormwater drainage system, or discharging to state waters.
   2. Perimeter control may consist of vegetation buffers, berms, silt fence, erosion logs, existing landforms, or other BMPs as approved.
   3. Perimeter control shall be in accordance with subsection 208.04.

## 5. During Construction

Responsibilities of the SWMP administrator/erosion control supervisor during construction.

The SWMP should be considered a “living document” that is continuously reviewed and modified. During construction, the following items shall be added, updated, or amended as needed by the SWMP Administrator/Erosion Control Supervisor (ECS) in accordance with section 208.

A. Materials Handling And Spill Prevention
B. Stockpile Management
C. Grading And Slope Stabilization
D. Surface Roughening
E. Vehicle Tracking
F. Temporary Stabilization
G. Concrete Washout
   1. Concrete washout water or waste from field laboratories and paving equipment shall be contained in accordance with subsection 208.05.
H. Saw Cutting
I. New Inlet/Culvert Protection
J. Street Cleaning

## 6. Inspections

A. Inspections shall be in accordance with subsection 208.03 (c).

## 7. BMP Maintenance

A. Maintenance shall be in accordance with subsection 208.04 (e).

## 8. Record Keeping

A. Records shall be in accordance with subsection 208.03 (c).

## 9. Interim and Final Stabilization

A. Seeding Plan
Soil preparation, soil conditioning or topsoil, seeding (native), mulching (weed free), and mulch tackifier will be required for an estimated 16 acres of disturbed area within the right-of-way limits which are not surfaced. The following type and rates shall be used

| COMMON NAME | BOTANICAL NAME | POUNDS PLS/ACRE |
|---|---|---|
| Western wheatgrass | Pascopyrum smithii "Rosanna" | 7.0 |
| Slender wheatgrass | Elymus trachycalus ssp. Trachycalus "Pyror" | 5.0 |
| Fowl bluegrass | Poa palustris | 1.0 |
| Blue joint wheatgrass | Calamagrostis canadensis | 0.5 |
| Tufted hairgrass | Deschampsia caespitosa | 0.5 |
| | **Total** | 14.0 |

B. Seeding Application: Drill seed 0.25 inch to 0.5 inch into the soil. In small areas not accessible to a drill, hand broadcast at double the rate and rake 0.25 inch to 0.5 inch into soil.

C. Mulching Application: Apply 1 ½ tons of certified weed free hay per acre mechanically crimped into the soil in combination with an organic mulch tackifier.

D. Special Requirements: Due to high failure rates, hydromulching and/or hydroseeding will not be allowed.

E. Soil Conditioning And Fertilizer Requirements:
1. Humate shall be applied at 1,200 lbs./acre.
2. Fertilizer shall consist of 90% fungal biomass (mycelium) and 10% potassium-magnesia with a grade of 6-1-3 or approved equal. Fertilizer shall be applied at 2,000 lbs/acre.

F. Blanket Application: On slopes and ditches requiring a blanket, the blanket shall be placed in lieu of mulch and mulch tackifier. See Erosion Control Plan/SWMP Site Map for blanket locations.

G. Reseeding Operations/Corrective Stabilization
Prior To Final Acceptance.
1. Seeded areas shall be reviewed during the 14 day inspections by the Erosion Control Supervisor for bare soils caused by surface or wind erosion. Bare areas caused by surface or gully erosion, blown away mulch, etc. shall be regraded, seeded, mulched and have mulch tackifier (or blanket) applied as necessary.
2. Areas where seed has not germinated after one season shall be evaluated by the Engineer and CDOT Landscape Architect. Areas that have not germinated shall have seed, mulch and mulch tackifier (or blanket) applied. Work shall be paid for by the appropriate bid item.
3. The Contractor shall maintain seeding/mulch/tackifier, mow to control weeds or apply herbicide to control weeds in the seeded areas until final acceptance.

## 10. Prior To Final Acceptance

A. Final acceptance shall be in accordance with subsection 208.061.

## 11. Tabulation of Stormwater Quantities

| PAY ITEM | DESCRIPTION | UNIT | QUANTITY |
|---|---|---|---|
| 203 | Combination Loader | Hour | 40 |
| 203 | Laborer | Hour | 40 |
| 208 | Erosion Log (12 Inch) | LF | 8,225 |
| 208 | Erosion Bales (Weed Free) | Each | 162 |
| 208 | Concrete Washout Structure | Each | 2 |
| 208 | Storm Drain Inlet Protection (Type 2) | LF | 80 |
| 208 | Stabilized Construction Entrance | Each | 2 |
| 208 | Sediment Removal And Disposal | LS | 1 |
| 208 | Erosion Control Supervisor | Day | 170 |
| 212 | Seeding (Native) | Acre | 24 |
| 212 | Soil Conditioning | Acre | 16 |
| 213 | Mulching (Weed Free Hay) | Acre | 24 |
| 213 | Mulch Tackifier | Lb | 4,800 |
| 216 | Soil Retention Blanket (Plastic) | SY | 1,131 |
| 217 | Herbicide Treatment | Hour | 16 |
| 607 | Fence (Plastic) | LF | 1,900 |
| 700 | Erosion Control | Fa | 1 |

1. BMP maintenance shall be paid for as: 208 Sediment Removal and Disposal Lump Sum
2. It is estimated that 2 concrete washout structures will be required on the project. One concrete washout structure shall be used for the field laboratories.
3. It is estimated that 40 hours of labor, combination loader (75-125 horsepower) and/or backhoe may be required for miscellaneous erosion control work as directed by the Engineer. Work shall be paid for as 203 Laborer, 203 Combination Loader, and 203 Backhoe.
4. It is estimated that 2 stabilized construction entrances will be required as directed to minimize vehicle tracking control. Locate BMP on the SWMP map.
5. Maintenance of seeded areas shall be paid for as: FA Erosion Control.

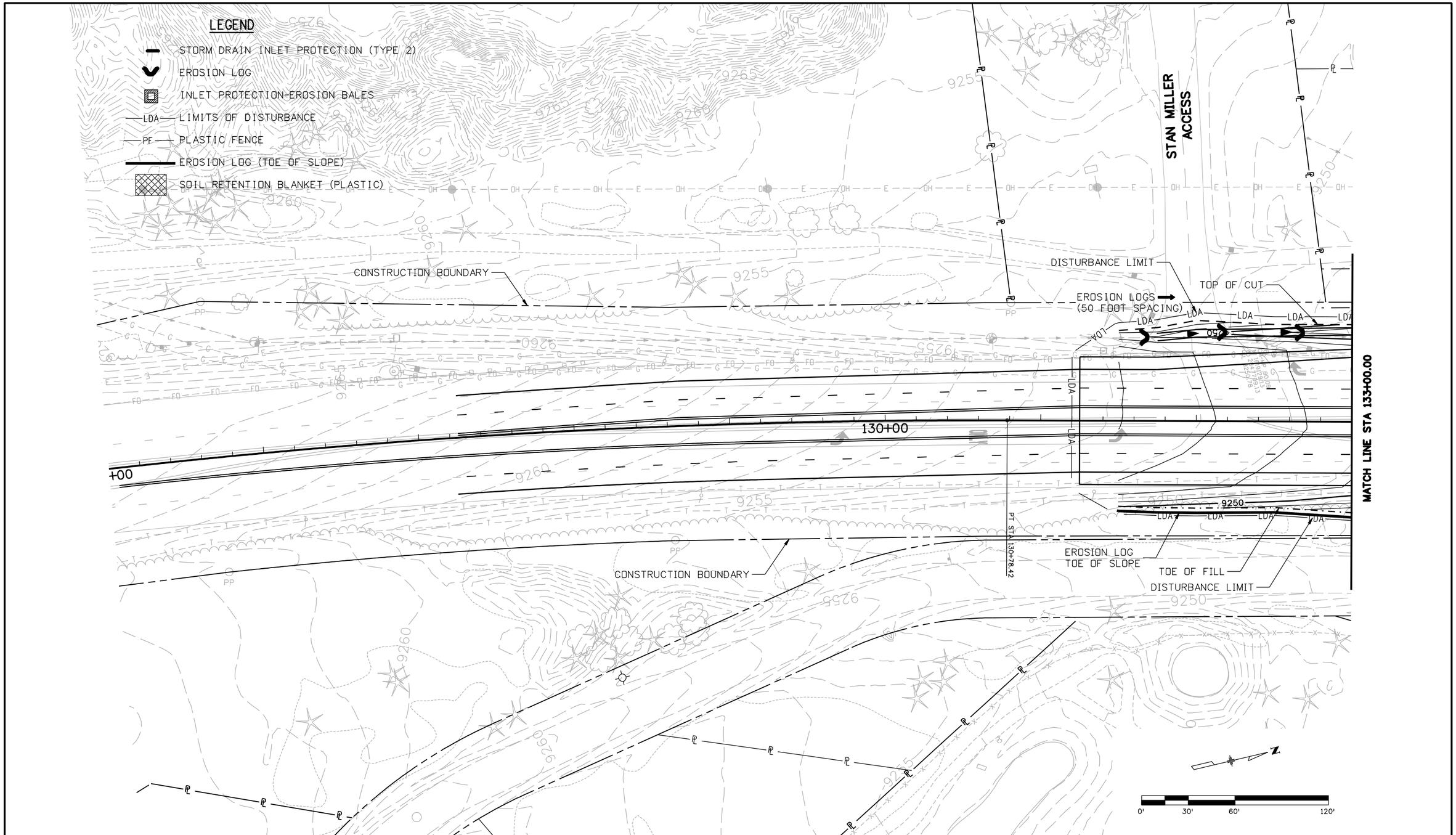


| | | | |
|---|---|---|---|
| Print Date: 1/26/2009 | Sheet Revisions | Colorado Department of Transportation | As Constructed |
| File Name: 16439ErosionControlSheet01.dgn | Date: / Comments / Init. | Mountain Residency P.O. Box 399<br>Dumont, CO 80436<br>Phone: 303-512-5750 FAX: 303-512-5775 | No Revisions: |
| Horiz. Scale: 1:60 Vert. Scale: As Noted | | Region 1 DCW | Revised: |
| Unit Information Unit Leader Initials | | | Void: |
| PBSJ 4601 DTC Boulevard, Suite 700<br>Denver, CO 80237<br>Phone: (303) 221-7275 Fax: (303) 221-7276 | | | |

| | | | |
|---|---|---|---|
| SH 9 EROSION CONTROL PLAN/ SWMP SITE MAP STA 125+00 TO STA 133+00 | | | Project No./Code |
| Designer: SLZ | Structure Numbers | | STA 0091-035 |
| Detailer: SLZ | | | 16439 |
| Sheet Subset: EROSION | Subset Sheets: 1 of 15 | | Sheet Number 142 |

21698 9:31:08 AM S:\Tranproj\246220-05\14927\Consultants\Plot_Sets\SHELF\16439ErosionControlSheet01.dgn

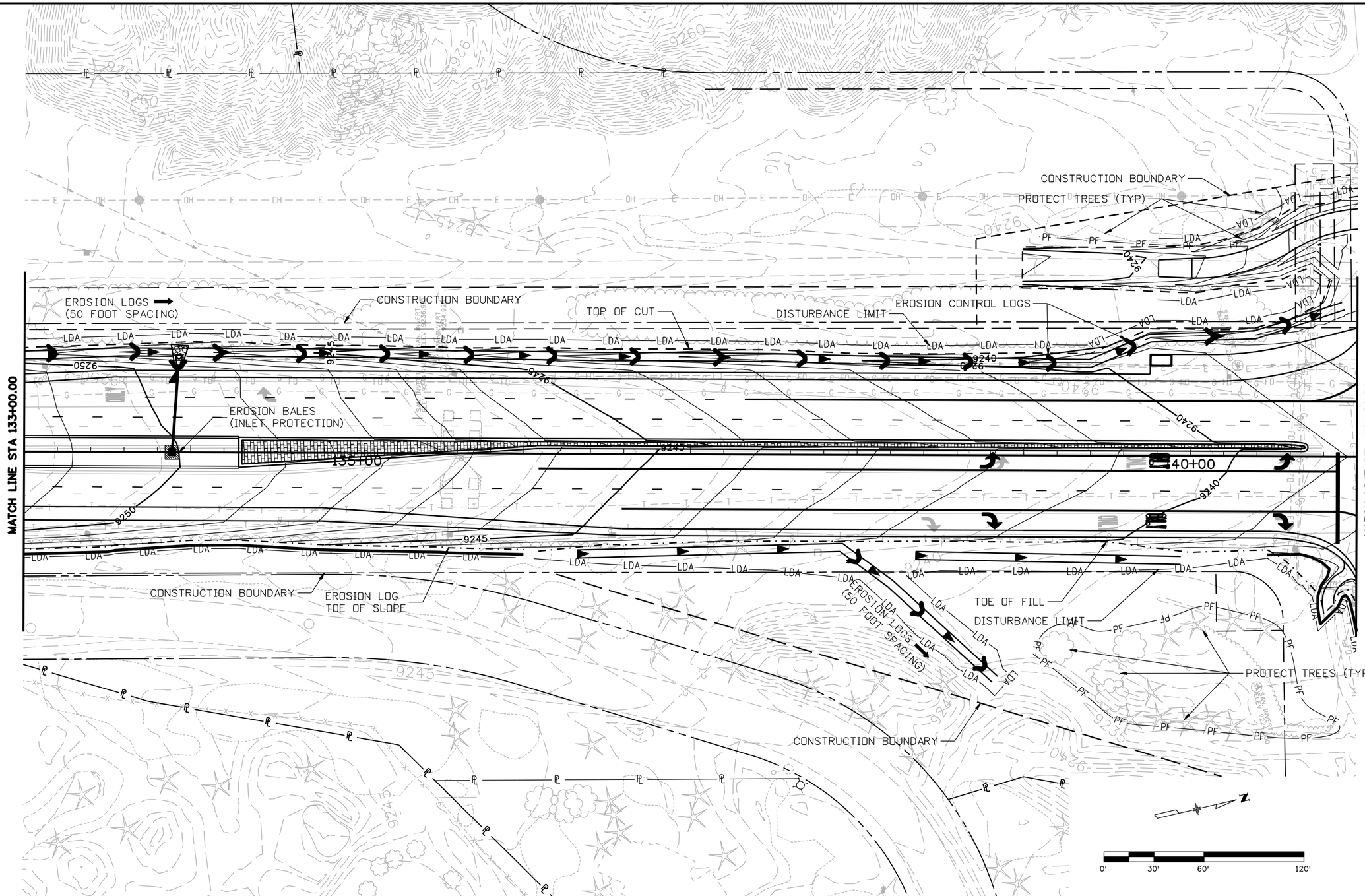


| | | | |
|---|---|---|---|
| Print Date: 1/26/2009 | Sheet Revisions | Colorado Department of Transportation | As Constructed |
| File Name: 16439ErosionControlSheet02.dgn | Date: / Comments / Init. | Mountain Residency P.O. Box 399<br>Dumont, CO 80436<br>Phone: 303-512-5750 FAX: 303-512-5775 | No Revisions: |
| Horiz. Scale: 1:60 Vert. Scale: As Noted | | | Revised: |
| Unit Information Unit Leader Initials | | Region 1 DCW | Void: |
| PBSJ 4601 DTC Boulevard, Suite 700<br>Denver, CO 80237<br>Phone: (303) 221-7275 Fax: (303) 221-7276 | | | |

| | | | |
|---|---|---|---|
| SH 9 EROSION CONTROL PLAN/ SWMP SITE MAP STA 133+00 TO STA 141+00 | | | Project No./Code |
| Designer: SLZ | Structure Numbers | | STA 0091-035 |
| Detailer: SLZ | | | 16439 |
| Sheet Subset: EROSION | Subset Sheets: 2 of 15 | | Sheet Number 143 |

21698 9:31:41 AM S:\Tranproj\246220-05\14927\Consultants\Plot_Sets\SHELF\16439ErosionControlSheet02.dgn

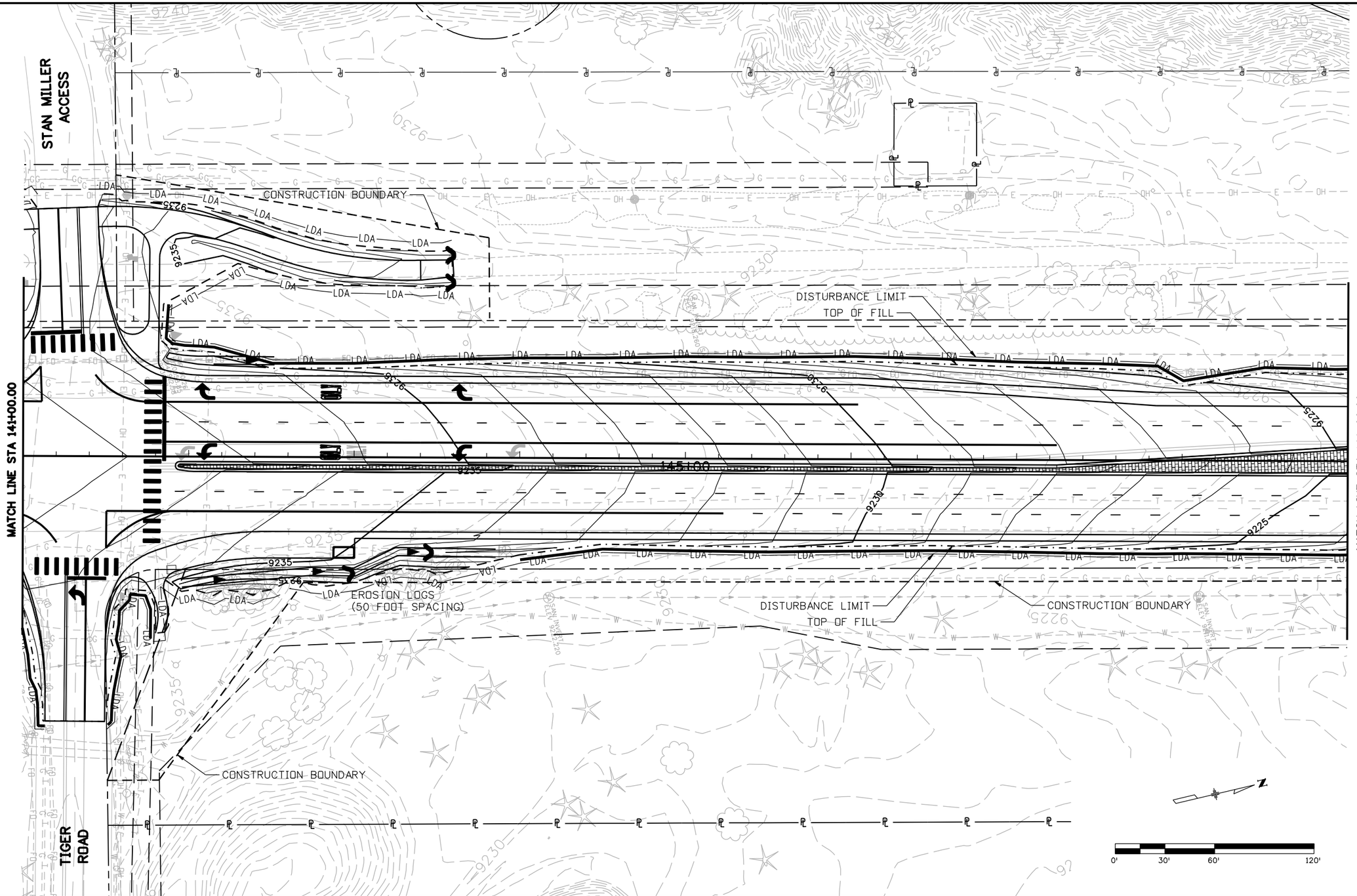


| | | | |
|---|---|---|---|
| Print Date: 1/26/2009 | | | |
| File Name: 16439ErosionControlSheet03.dgn | | | |
| Horiz. Scale: 1:60 | Vert. Scale: As Noted | | |
| Unit Information | Unit Leader Initials | | |

PBSJ 4601 DTC Boulevard, Suite 700 Denver, CO 80237 Phone: (303) 221-7275 Fax: (303) 221-7276

Sheet Revisions

| Date: | Comments | Init. |
|---|---|---|
| | | |
| | | |
| | | |
| | | |

Colorado Department of Transportation

DOT DEPARTMENT OF TRANSPORTATION

Mountain Residency P.O. Box 399
Dumont, CO 80436
Phone: 303-512-5750 FAX: 303-512-5775

Region 1 DCW

As Constructed

No Revisions:

Revised:

Void:

SH 9 EROSION CONTROL PLAN/ SWMP SITE MAP STA 141+00 TO STA 149+00

| | | | |
|---|---|---|---|
| Designer: | SLZ | Structure Numbers | |
| Detailer: | SLZ | | |
| Sheet Subset: | EROSION | Subset Sheets: | 3 of 15 |

Project No./Code

STA 0091-035

16439

Sheet Number 144

21698 9:32:19 AM S:\Tranproj\246220-05\14927\Consultants\Plot_Sets\SHELF\16439ErosionControlSheet03.dgn

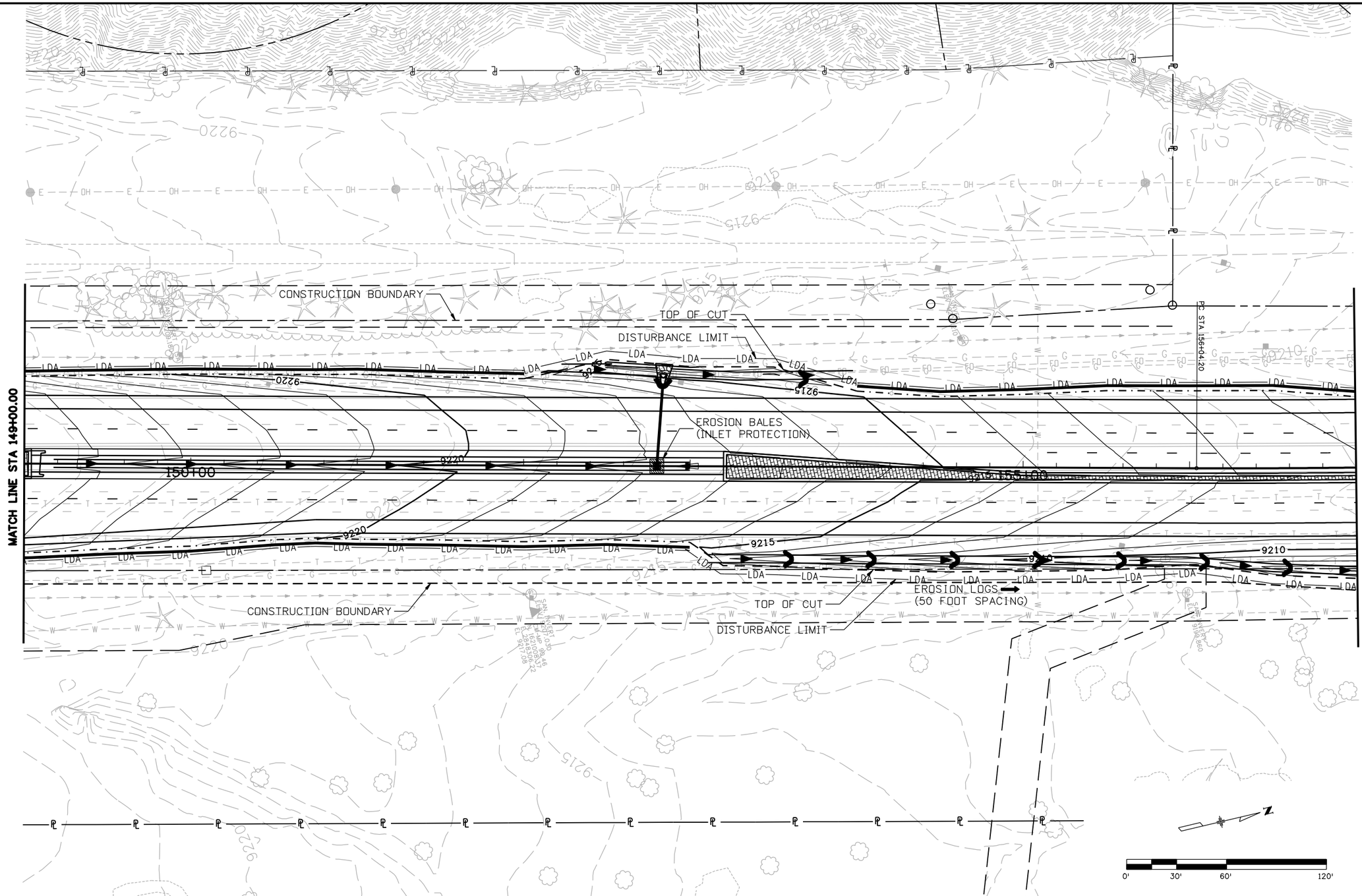


| | | | |
|---|---|---|---|
| Print Date: 1/26/2009 | Sheet Revisions | Colorado Department of Transportation | As Constructed |
| File Name: 16439ErosionControlSheet04.dgn | Date: / Comments / Init. | Mountain Residency P.O. Box 399 Dumont, CO 80436 Phone: 303-512-5750 FAX: 303-512-5775 | No Revisions: |
| Horiz. Scale: 1:60 Vert. Scale: As Noted | | Region 1 DCW | Revised: |
| Unit Information Unit Leader Initials | | | Void: |
| PBSJ 4601 DTC Boulevard, Suite 700 Denver, CO 80237 Phone: (303) 221-7275 Fax: (303) 221-7276 | | | |

SH 9 EROSION CONTROL PLAN/
SWMP SITE MAP
STA 149+00 TO STA 157+00

| | | | |
|---|---|---|---|
| Designer: | SLZ | Structure Numbers | |
| Detailer: | SLZ | | |
| Sheet Subset: | EROSION | Subset Sheets: | 4 of 15 |

Project No./Code
STA 0091-035
16439
Sheet Number 145

21698 9:33:09 AM S:\Tranproj\246220-05\14927\Consultants\Plot_Sets\SHELF\16439ErosionControlSheet04.dgn

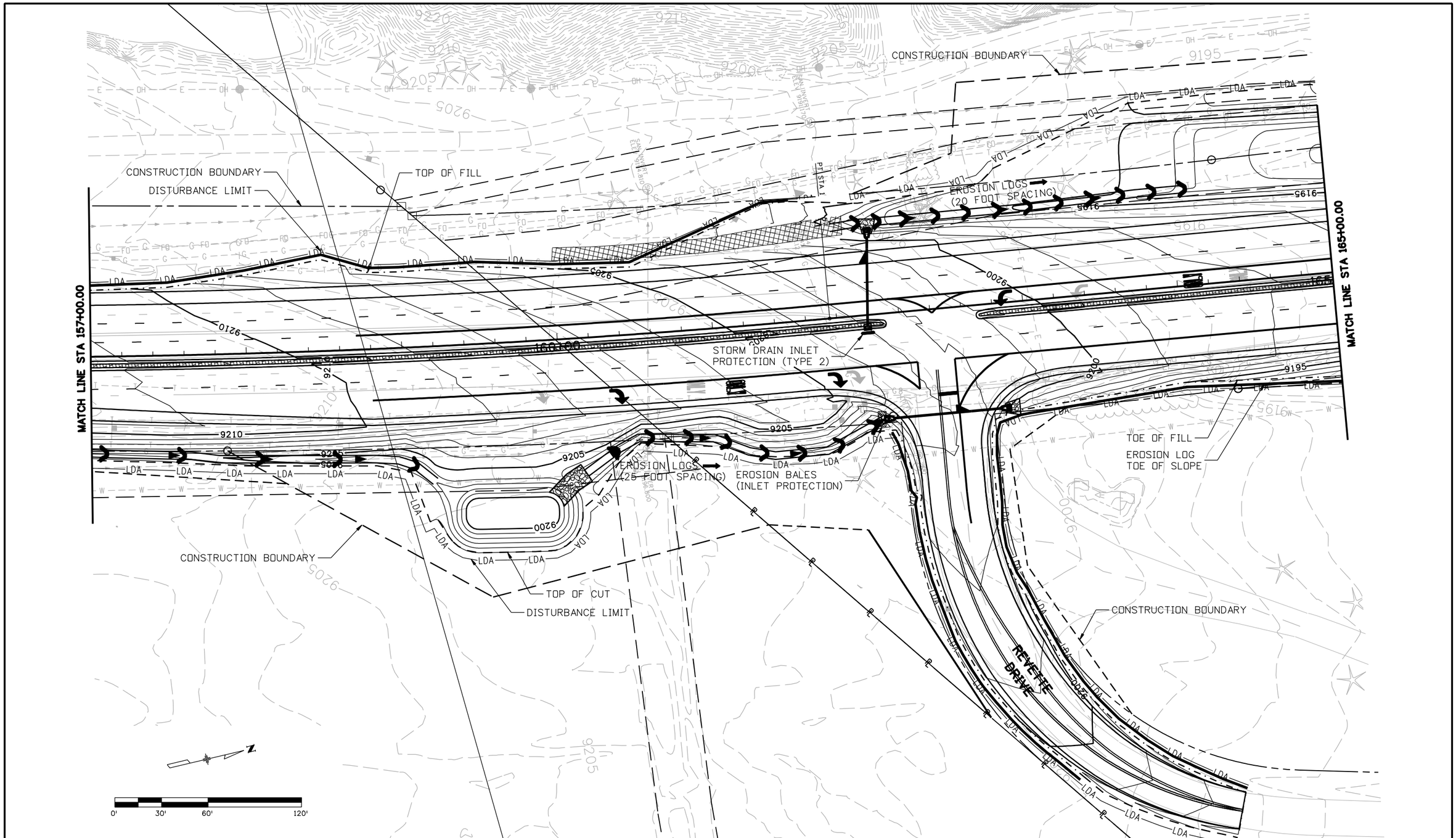


| | | | |
|---|---|---|---|
| Print Date: 1/26/2009 | Sheet Revisions | Colorado Department of Transportation | As Constructed |
| File Name: 16439ErosionControlSheet05.dgn | Date: / Comments / Init. | Mountain Residency P.O. Box 399<br>Dumont, CO 80436<br>Phone: 303-512-5750 FAX: 303-512-5775 | No Revisions: |
| Horiz. Scale: 1:60 Vert. Scale: As Noted | | Region 1 DCW | Revised: |
| Unit Information Unit Leader Initials | | | Void: |
| PBSJ 4601 DTC Boulevard, Suite 700<br>Denver, CO 80237<br>Phone: (303) 221-7275 Fax: (303) 221-7276 | | | |

| SH 9 EROSION CONTROL PLAN/ SWMP SITE MAP STA 157+00 TO STA 165+00 | | | | Project No./Code |
|---|---|---|---|---|
| Designer: SLZ | Structure Numbers | | | STA 0091-035 |
| Detailer: SLZ | | | | 16439 |
| Sheet Subset: EROSION | Subset Sheets: 5 of 15 | | | Sheet Number 146 |

21698 9:33:47 AM S:\Tranproj\246220-05\14927\Consultants\Plot_Sets\SHELF\16439ErosionControlSheet05.dgn

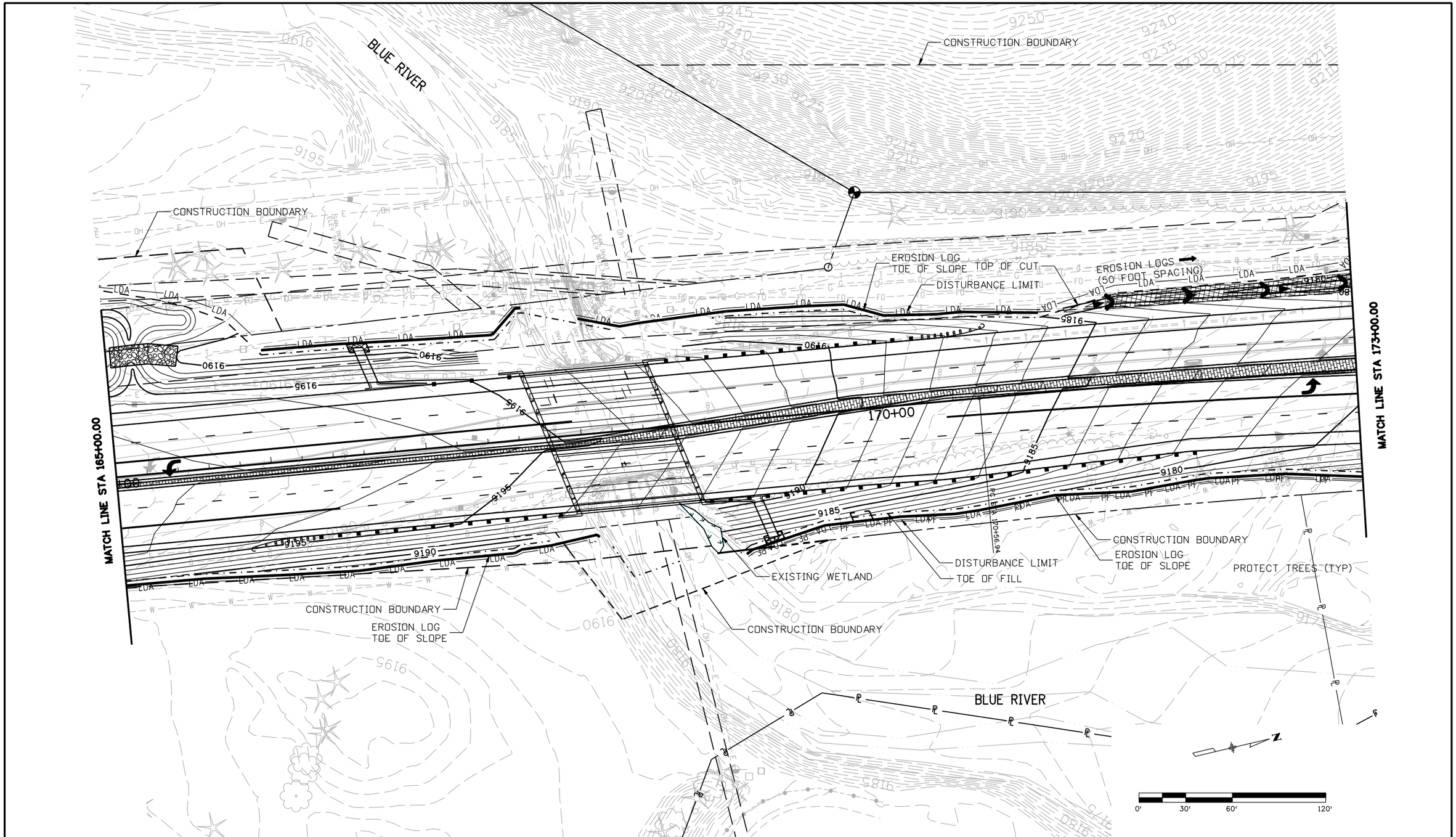


| | | | |
|---|---|---|---|
| Print Date: 1/26/2009 | | | |
| File Name: 16439ErosionControlSheet06.dgn | | | |
| Horiz. Scale: 1:60 | Vert. Scale: As Noted | | |
| Unit Information | Unit Leader Initials | | |

PBSJ 4601 DTC Boulevard, Suite 700 Denver, CO 80237 Phone: (303) 221-7275 Fax: (303) 221-7276

| Sheet Revisions | | |
|---|---|---|
| Date: | Comments | Init. |
| | | |
| | | |
| | | |
| | | |

Colorado Department of Transportation

DOT DEPARTMENT OF TRANSPORTATION

Mountain Residency P.O. Box 399
Dumont, CO 80436
Phone: 303-512-5750 FAX: 303-512-5775

Region 1 DCW

| As Constructed | | |
|---|---|---|
| No Revisions: | | |
| Revised: | | |
| Void: | | |

SH 9 EROSION CONTROL PLAN/
SWMP SITE MAP
STA 165+00 TO STA 173+00

| | | | |
|---|---|---|---|
| Designer: | SLZ | Structure Numbers | |
| Detailer: | SLZ | | |
| Sheet Subset: | EROSION | Subset Sheets: | 6 of 15 |

| Project No./Code |
|---|
| STA 0091-035 |
| 16439 |
| Sheet Number 147 |

21698 9:34:18 AM S:\Tranproj\246220-05\14927\Consultants\Plot_Sets\SHELF\16439ErosionControlSheet06.dgn

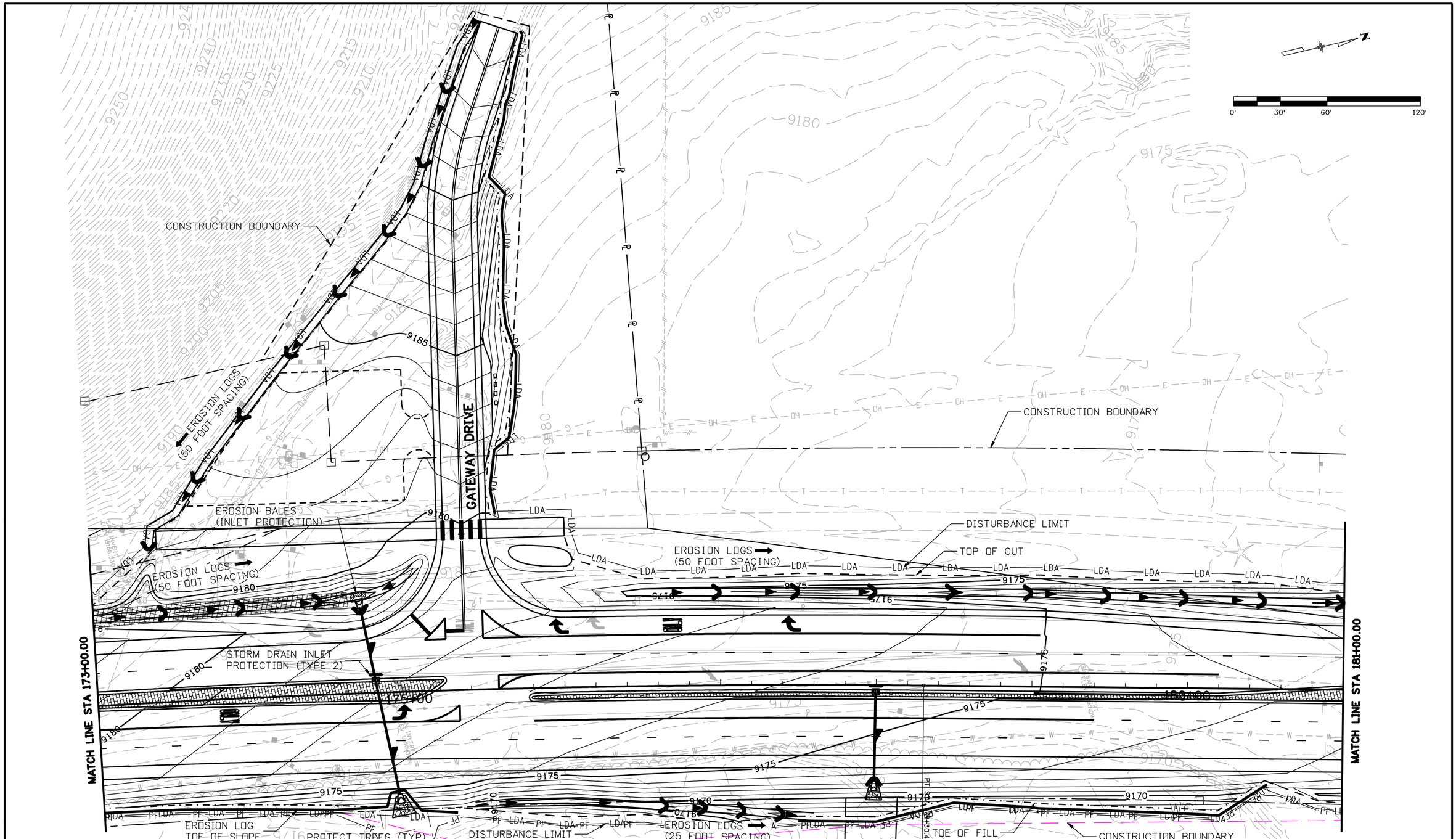


Print Date: 1/26/2009
File Name: 16439ErosionControlSheet07.dgn
Horiz. Scale: 1:60 Vert. Scale: As Noted
Unit Information Unit Leader Initials

PBSJ 4601 DTC Boulevard, Suite 700 Denver, CO 80237 Phone: (303) 221-7275 Fax: (303) 221-7276

| Sheet Revisions | | |
|---|---|---|
| Date: | Comments | Init. |
| | | |
| | | |
| | | |
| | | |

Colorado Department of Transportation
DOT
Mountain Residency P.O. Box 399
Dumont, CO 80436
Phone: 303-512-5750 FAX: 303-512-5775
Region 1 DCW

As Constructed
No Revisions:
Revised:
Void:

SH 9 EROSION CONTROL PLAN/ SWMP SITE MAP
STA 173+00 TO STA 181+00

| | | | |
|---|---|---|---|
| Designer: | SLZ | Structure Numbers | |
| Detailer: | SLZ | | |
| Sheet Subset: | EROSION | Subset Sheets: | 7 of 15 |

Project No./Code
STA 0091-035
16439
Sheet Number 148

21698 9:35:02 AM S:\Tranpro\246220-05\14927\Consultants\Plot_Sets\SHELF\16439ErosionControlSheet07.dgn

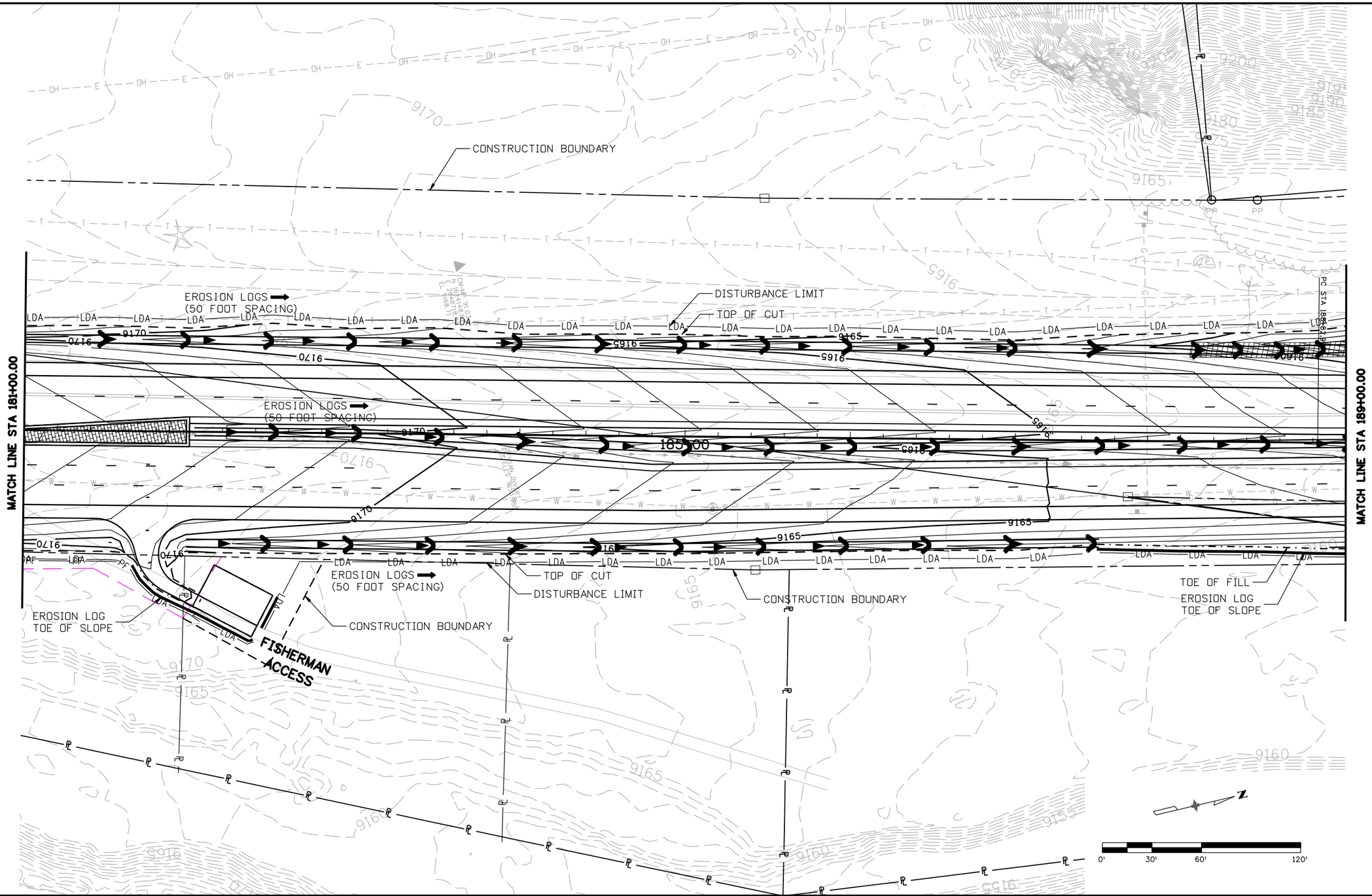


| | | | |
|---|---|---|---|
| Print Date: 1/26/2009 | Sheet Revisions | Colorado Department of Transportation | As Constructed |
| File Name: 16439ErosionControlSheet08.dgn | Date: / Comments / Init. | Mountain Residency P.O. Box 399<br>Dumont, CO 80436<br>Phone: 303-512-5750 FAX: 303-512-5775 | No Revisions: |
| Horiz. Scale: 1:60 Vert. Scale: As Noted | | Region 1 DCW | Revised: |
| Unit Information Unit Leader Initials | | | Void: |
| PBSJ 4601 DTC Boulevard, Suite 700<br>Denver, CO 80237<br>Phone: (303) 221-7275 Fax: (303) 221-7276 | | | |

| | | | |
|---|---|---|---|
| SH 9 EROSION CONTROL PLAN/ SWMP SITE MAP STA 181+00 TO STA 189+00 | | | Project No./Code |
| Designer: SLZ | Structure Numbers | | STA 0091-035 |
| Detailer: SLZ | | | 16439 |
| Sheet Subset: EROSION | Subset Sheets: 8 of 15 | | Sheet Number 149 |

21698 9:35:35 AM S:\Tranproj\246220-05\14927\Consultants\Plot_Sets\SHELF\16439ErosionControlSheet08.dgn

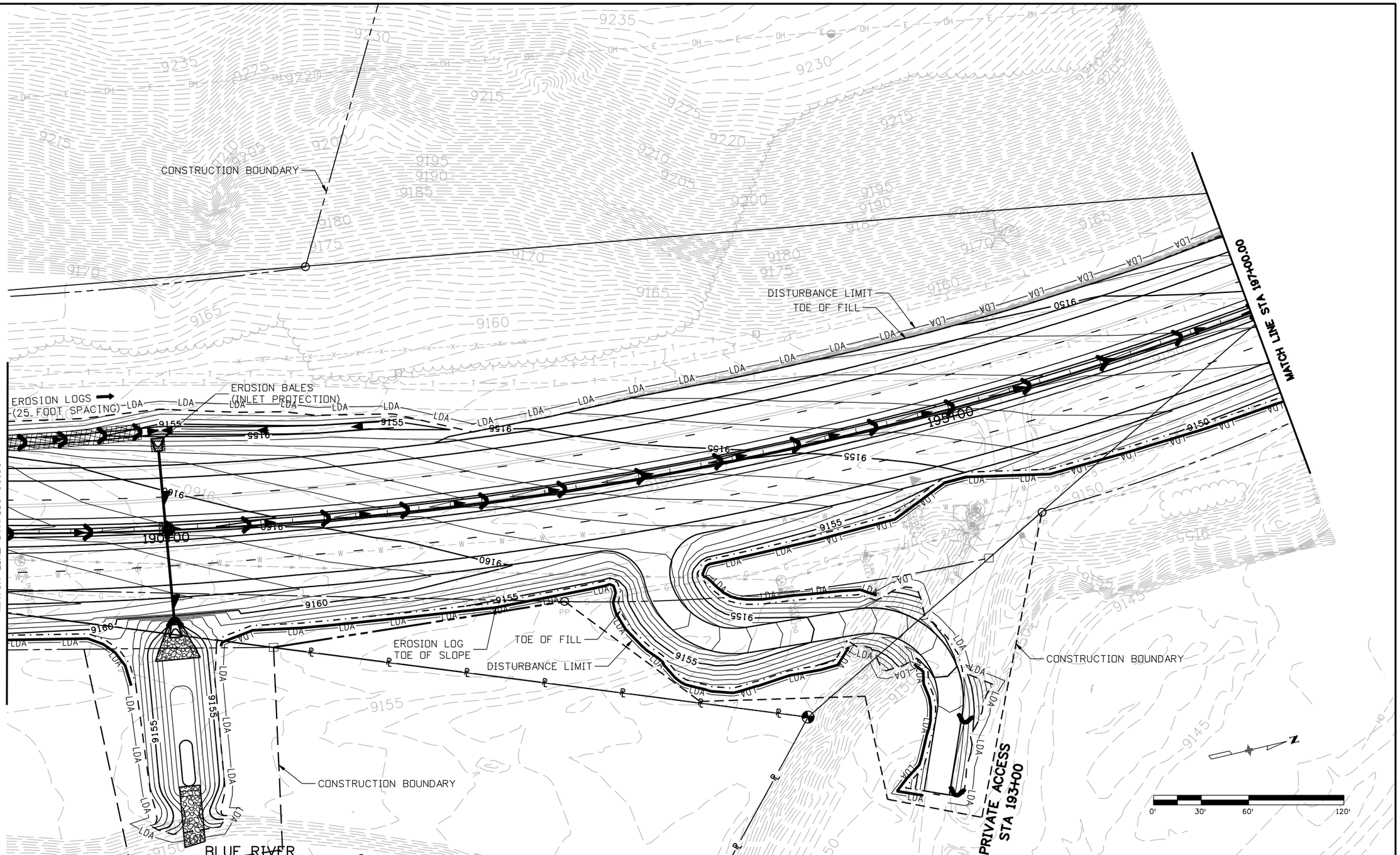


| | | | |
|---|---|---|---|
| Print Date: 1/26/2009 | Sheet Revisions | Colorado Department of Transportation | As Constructed |
| File Name: 16439ErosionControlSheet09.dgn | Date: / Comments / Init. | Mountain Residency P.O. Box 399 Dumont, CO 80436 Phone: 303-512-5750 FAX: 303-512-5775 | No Revisions: |
| Horiz. Scale: 1:60 Vert. Scale: As Noted | | Region 1 DCW | Revised: |
| Unit Information Unit Leader Initials | | | Void: |
| PBSJ 4601 DTC Boulevard, Suite 700 Denver, CO 80237 Phone: (303) 221-7275 Fax: (303) 221-7276 | | | |

SH 9 EROSION CONTROL PLAN/ SWMP SITE MAP STA 189+00 TO STA 197+00

| | | | |
|---|---|---|---|
| Designer: | SLZ | Structure Numbers | |
| Detailer: | SLZ | | |
| Sheet Subset: | EROSION | Subset Sheets: | 9 of 15 |

Project No./Code: STA 0091-035

16439

Sheet Number 150

21698 9:36:04 AM S:\Tranproj\246220-05\14927\Consultants\Plot_Sets\SHELF\16439ErosionControlSheet09.dgn

| | | | |
|---|---|---|---|
| Print Date: 1/26/2009 | | | |
| File Name: 16439ErosionControlSheet10.dgn | | | |
| Horiz. Scale: 1:60 | Vert. Scale: As Noted | | |
| Unit Information | Unit Leader Initials | | |

PBSJ 4601 DTC Boulevard, Suite 700 Denver, CO 80237 Phone: (303) 221-7275 Fax: (303) 221-7276

**Sheet Revisions**

| Date: | Comments | Init. |
|---|---|---|
| | | |
| | | |
| | | |
| | | |

Colorado Department of Transportation

DOT DEPARTMENT OF TRANSPORTATION

Mountain Residency P.O. Box 399
Dumont, CO 80436
Phone: 303-512-5750 FAX: 303-512-5775

Region 1 DCW

As Constructed

No Revisions:

Revised:

Void:

SH 9 EROSION CONTROL PLAN/
SWMP SITE MAP
STA 197+00 TO STA 205+00

| | | | |
|---|---|---|---|
| Designer: | SLZ | Structure Numbers | |
| Detailer: | SLZ | | |
| Sheet Subset: | EROSION | Subset Sheets: | 10 of 15 |

Project No./Code

STA 0091-035

16439

Sheet Number 151

21698 9:36:27 AM S:\Tranproj\246220-05\14927\Consultants\Plot_Sets\SHELF\16439ErosionControlSheet10.dgn

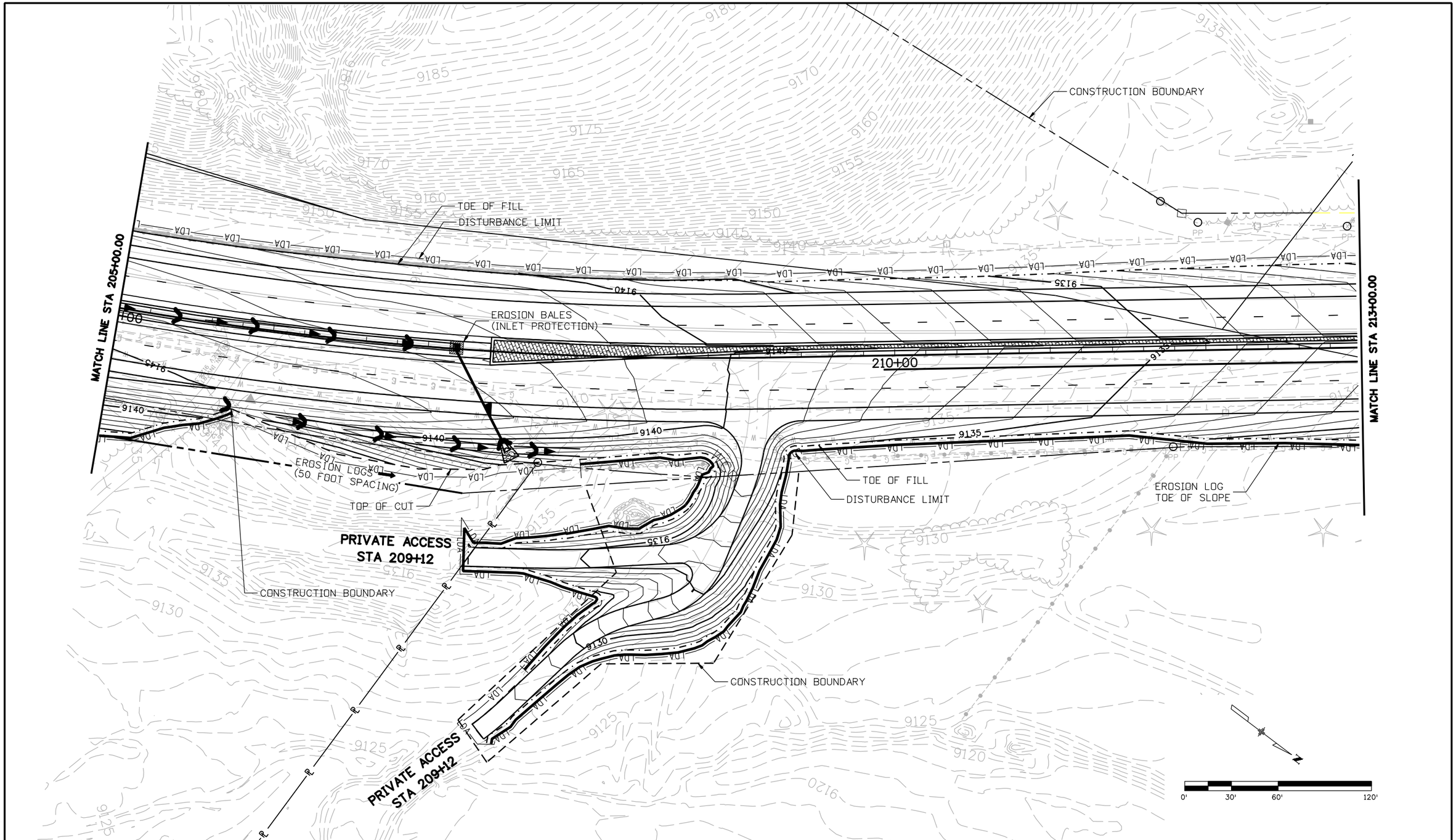


| | | | |
|---|---|---|---|
| Print Date: 1/26/2009 | Sheet Revisions | Colorado Department of Transportation | As Constructed |
| File Name: 16439ErosionControlSheet11.dgn | Date: / Comments / Init. | Mountain Residency P.O. Box 399<br>Dumont, CO 80436<br>Phone: 303-512-5750 FAX: 303-512-5775 | No Revisions: |
| Horiz. Scale: 1:60 Vert. Scale: As Noted | | Region 1 DCW | Revised: |
| Unit Information Unit Leader Initials | | | Void: |
| PBSJ 4601 DTC Boulevard, Suite 700<br>Denver, CO 80237<br>Phone: (303) 221-7275 Fax: (303) 221-7276 | | | |

| SH 9 EROSION CONTROL PLAN/ SWMP SITE MAP STA 205+00 TO STA 213+00 | | | Project No./Code |
|---|---|---|---|
| Designer: SLZ | Structure Numbers | | STA 0091-035 |
| Detailer: SLZ | | | 16439 |
| Sheet Subset: EROSION | Subset Sheets: 11 of 15 | | Sheet Number 152 |

21698 9:38:15 AM S:\Tranproj\246220-05\14927\Consultants\Plot_Sets\SHELF\16439ErosionControlSheet11.dgn

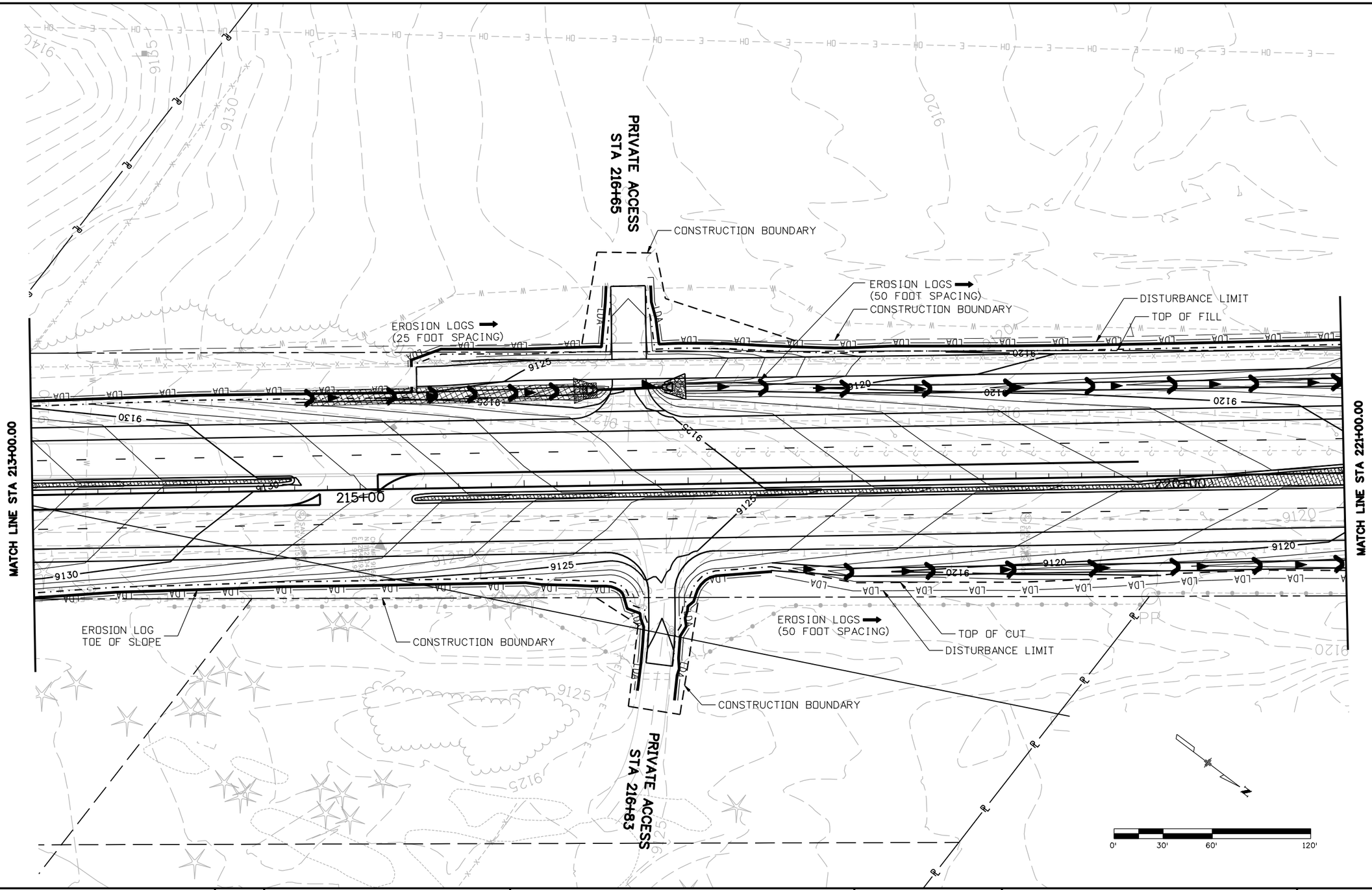


| | | | |
|---|---|---|---|
| Print Date: 1/26/2009 | Sheet Revisions | Colorado Department of Transportation | As Constructed |
| File Name: 16439ErosionControlSheet12.dgn | Date: / Comments / Init. | Mountain Residency P.O. Box 399<br>Dumont, CO 80436<br>Phone: 303-512-5750 FAX: 303-512-5775 | No Revisions: |
| Horiz. Scale: 1:60 Vert. Scale: As Noted | | Region 1 DCW | Revised: |
| Unit Information Unit Leader Initials | | | Void: |
| PBSJ 4601 DTC Boulevard, Suite 700<br>Denver, CO 80237<br>Phone: (303) 221-7275 Fax: (303) 221-7276 | | | |

| SH 9 EROSION CONTROL PLAN/ SWMP SITE MAP STA 213+00 TO STA 221+00 | | | Project No./Code |
|---|---|---|---|
| Designer: SLZ | Structure Numbers | | STA 0091-035 |
| Detailer: SLZ | | | 16439 |
| Sheet Subset: EROSION | Subset Sheets: 12 of 15 | | Sheet Number 153 |

21698 9:38:44 AM S:\Tranproj\246220-05\14927\Consultants\Plot_Sets\SHELF\16439ErosionControlSheet12.dgn

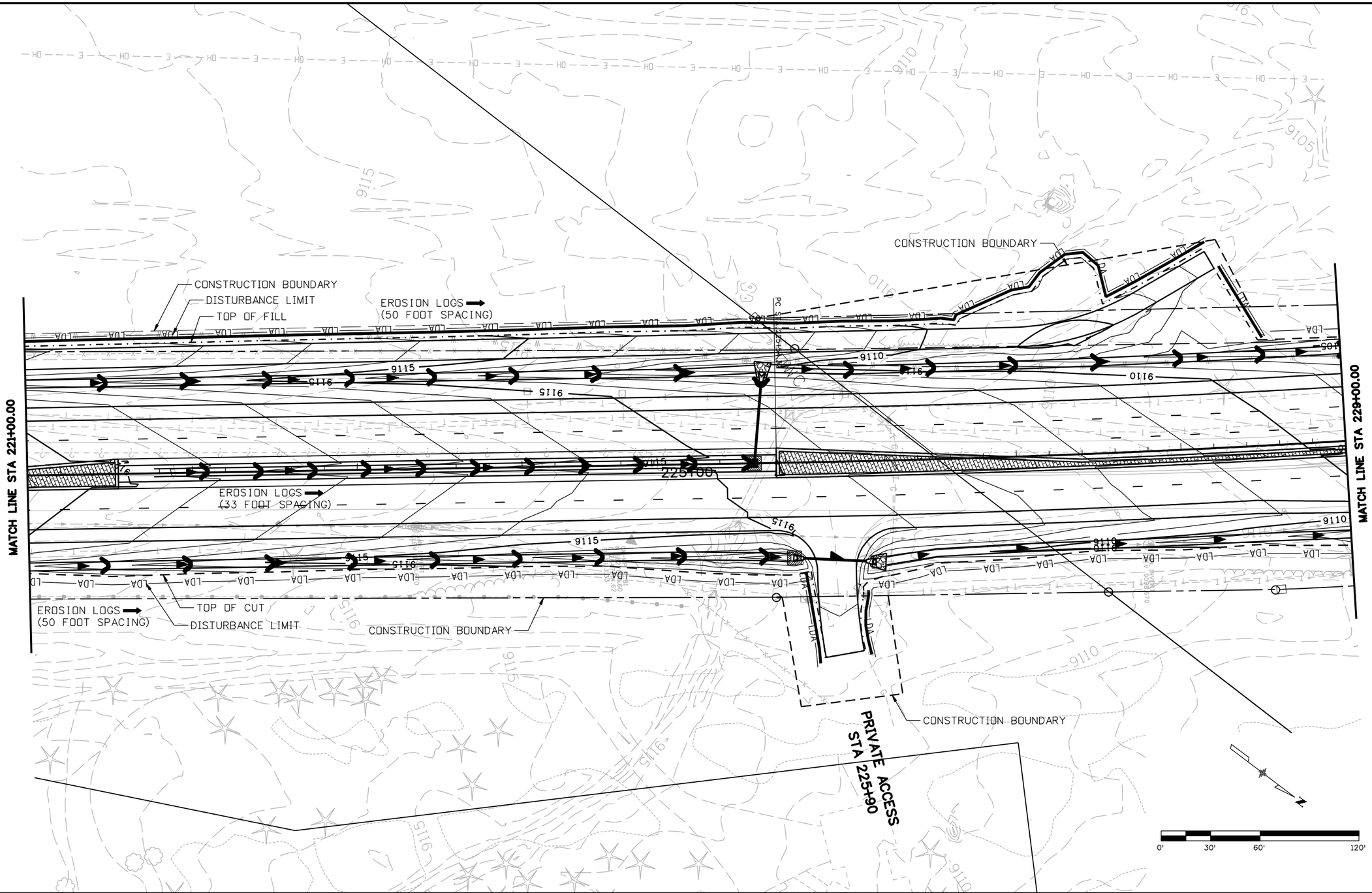


| | | | |
|---|---|---|---|
| Print Date: 1/26/2009 | | | |
| File Name: 16439ErosionControlSheet13.dgn | | | |
| Horiz. Scale: 1:60 | Vert. Scale: As Noted | | |
| Unit Information | Unit Leader Initials | | |

PBSJ 4601 DTC Boulevard, Suite 700
Denver, CO 80237
Phone: (303) 221-7275 Fax: (303) 221-7276

Sheet Revisions

| Date: | Comments | Init. |
|---|---|---|
| | | |
| | | |
| | | |
| | | |

Colorado Department of Transportation
DOT
DEPARTMENT OF TRANSPORTATION
Mountain Residency P.O. Box 399
Dumont, CO 80436
Phone: 303-512-5750 FAX: 303-512-5775
Region 1 DCW

As Constructed
No Revisions:
Revised:
Void:

SH 9 EROSION CONTROL PLAN/
SWMP SITE MAP
STA 221+00 TO STA 229+00

| | | | |
|---|---|---|---|
| Designer: | SLZ | Structure Numbers | |
| Detailer: | SLZ | | |
| Sheet Subset: | EROSION | Subset Sheets: | 13 of 15 |

Project No./Code
STA 0091-035
16439
Sheet Number 154

21698 9:39:07 AM S:\Tranproj\246220-05\14927\Consultants\Plot_Sets\SHELF\16439ErosionControlSheet13.dgn

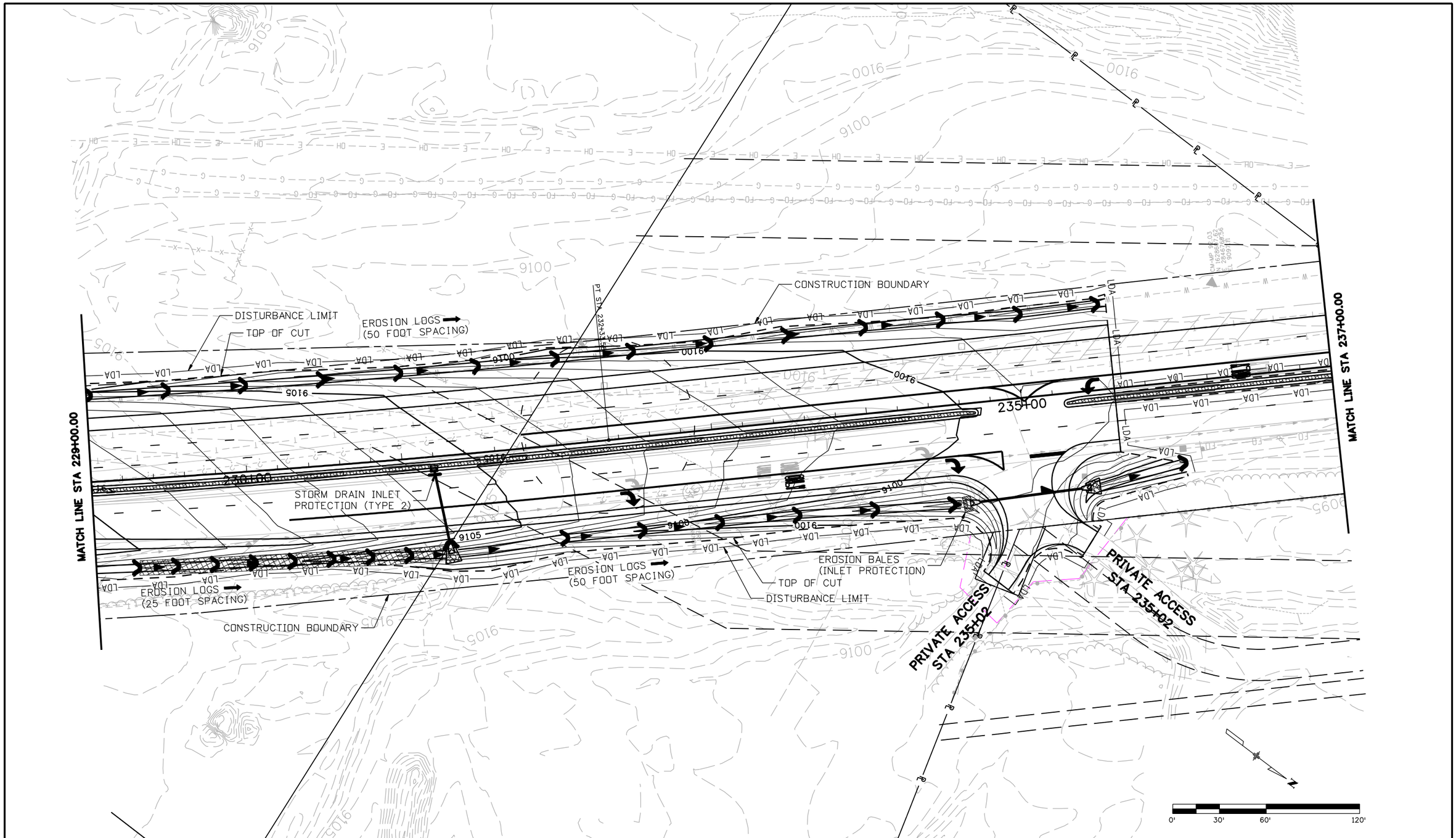


| | | | |
|---|---|---|---|
| Print Date: 1/26/2009 | Sheet Revisions | Colorado Department of Transportation | As Constructed |
| File Name: 16439ErosionControlSheet14.dgn | Date: / Comments / Init. | Mountain Residency P.O. Box 399<br>Dumont, CO 80436<br>Phone: 303-512-5750 FAX: 303-512-5775 | No Revisions: |
| Horiz. Scale: 1:60 Vert. Scale: As Noted | | Region 1 DCW | Revised: |
| Unit Information Unit Leader Initials | | | Void: |
| PBSJ 4601 DTC Boulevard, Suite 700<br>Denver, CO 80237<br>Phone: (303) 221-7275 Fax: (303) 221-7276 | | | |

| | | | |
|---|---|---|---|
| SH 9 EROSION CONTROL PLAN/ SWMP SITE MAP STA 229+00 TO STA 237+00 | | | Project No./Code |
| Designer: SLZ | Structure Numbers | | STA 0091-035 |
| Detailer: SLZ | | | 16439 |
| Sheet Subset: EROSION | Subset Sheets: 14 of 15 | | Sheet Number 155 |

21698 9:39:37 AM S:\Tranproj\246220-05\14927\Consultants\Plot_Sets\SHELF\16439ErosionControlSheet14.dgn

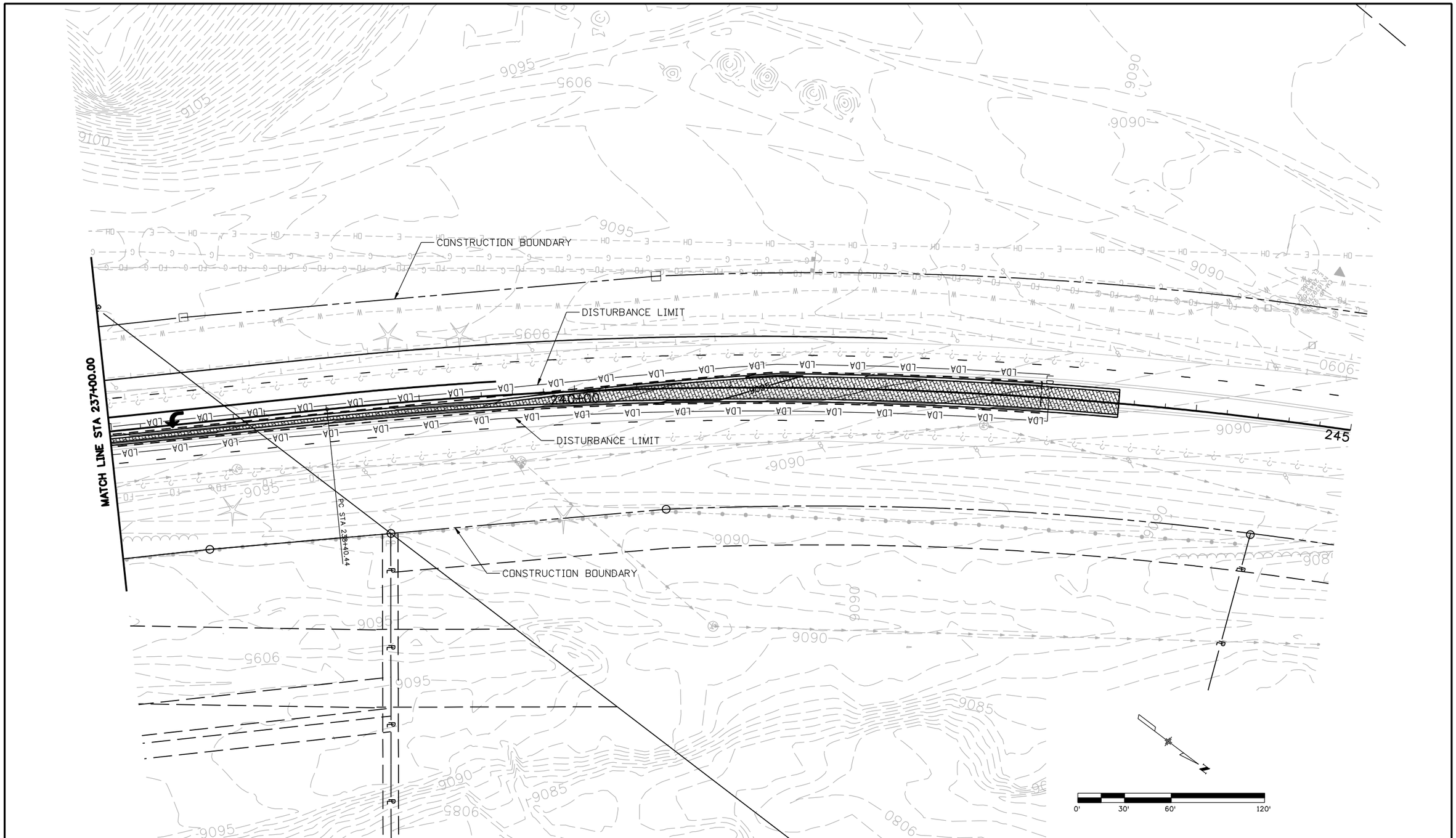


| | | | |
|---|---|---|---|
| Print Date: 1/26/2009 | | | |
| File Name: 16439ErosionControlSheet15.dgn | | | |
| Horiz. Scale: 1:60 | Vert. Scale: As Noted | | |
| Unit Information | Unit Leader Initials | | |

PBSJ 4601 DTC Boulevard, Suite 700
Denver, CO 80237
Phone: (303) 221-7275 Fax: (303) 221-7276

Sheet Revisions

| Date: | Comments | Init. |
|---|---|---|
| | | |
| | | |
| | | |
| | | |

Colorado Department of Transportation

DOT DEPARTMENT OF TRANSPORTATION

Mountain Residency P.O. Box 399
Dumont, CO 80436
Phone: 303-512-5750 FAX: 303-512-5775

Region 1 DCW

As Constructed

No Revisions:

Revised:

Void:

SH 9 EROSION CONTROL PLAN/
SWMP SITE MAP
STA 237+00 TO STA 245+00

| | | | |
|---|---|---|---|
| Designer: | SLZ | Structure Numbers | |
| Detailer: | SLZ | | |
| Sheet Subset: | EROSION | Subset Sheets: | 15 of 15 |

Project No./Code

STA 0091-035

16439

Sheet Number 156

21698 9:40:02 AM S:\Tranpro\246220-05\14927\Consultants\Plot_Sets\SHELF\16439ErosionControlSheet15.dgn

WETLAND MITIGATION NOTES

1. Prior to wetland construction, a preconstruction meeting shall occur on site between the Contractor, Engineer, and CDOT Staff Landscape Architect to discuss wetland mitigation intent. At this meeting, adjacent wetlands not to be disturbed shall be flagged by the Landscape Architect and areas to obtain topsoil shall be located.

2. Prior to construction commencing, the Contractor shall place plastic fence and any erosion control BMPs at the edge of existing vegetation to protect wetlands, shrubs and trees from construction activity.

3. It is estimated that 1310 SF of wetlands mitigation shall occur on site.

4. Existing topsoil, from existing wetlands on site that are permanently impacted, shall be stockpiled for placement in the wetland mitigation site. Existing topsoil shall be replaced with embankment and graded to drain. It is estimated that 24 CY of topsoil and embankment shall be required.

5. Grading of site shall be included under the Embankment Material (Complete In Place) pay item. Contours shown are final after placement of topsoil.

6. Prior to placement of topsoil, the Engineer shall contact the CDOT Landscape Architect to be on site to approve grades and shaping. The Contractor shall verify elevations by surveying the wetland mitigation site prior to this meeting.

7. Topsoil from stockpile shall be placed in the mitigation site at a depth of 6 inches. The Engineer shall contact the CDOT Landscape Architect to approve final contouring of the site. After completion of placing the topsoil in the mitigation site, the site shall be seeded with the mix shown on the SWMP.

8. Brush layer cuttings shall be planted while dormant prior to June 1.

9. Brush layer cuttings (Salix exigua) shall be planted to a minimum depth of 30 inches. An auger, "stinger", hammer drill or other tool may be needed to plant cuttings. Holes shall be backfilled with native material and watered to ensure no air pockets remain. Plants shall be periodically inspected after planting to check for settling of soil; if settling occurs hole will be backfilled with native soil. All work associated with cuttings to be included under item 214, Brush Layer Cutting.

WETLAND TABULATION

| PAY ITEM | DESCRIPTION | UNIT | QUANTITY |
|---|---|---|---|
| 203 | Embankment Material (Complete in Place) | CY | 24 |
| 207 | Topsoil | CY | 24 |
| 214 | Brush Layer Cutting | Each | 100 |
| 607 | Fence (Plastic) | LF | 600 |

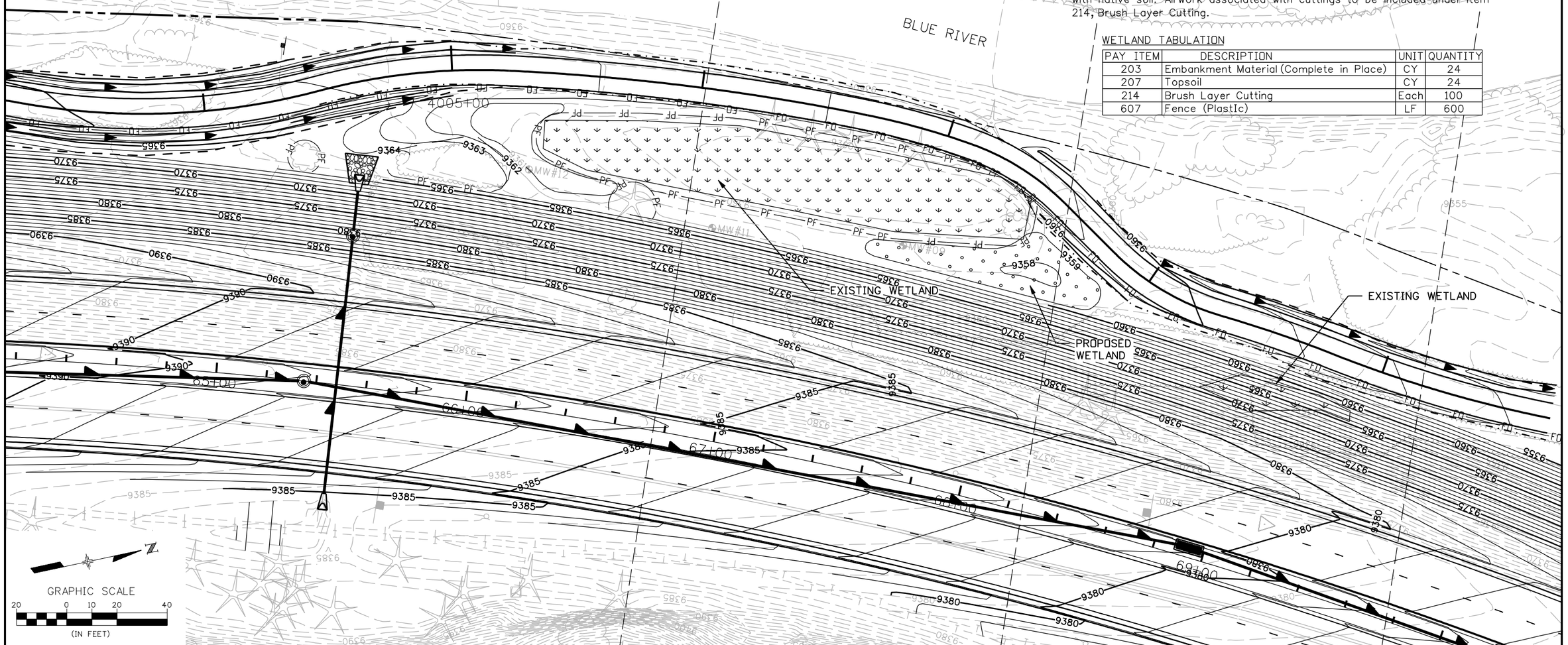


| | | | |
|---|---|---|---|
| Print Date: 1/26/2009 | Sheet Revisions | Colorado Department of Transportation | As Constructed |
| File Name: 16439wetland01.dgn | Date: / Comments / Init. | Mountain Residency P.O. Box 399 Dumont, CO 80436 Phone: 303-512-5750 FAX: 303-512-5775 | No Revisions: |
| Horiz. Scale: 1:40 Vert. Scale: As Noted | R-X | Region 1 DCW | Revised: |
| Unit Information Unit Leader Initials | | | Void: |
| PBSJ 4601 DTC Boulevard, Suite 700 Denver, CO 80237 Phone: (303) 221-7275 Fax: (303) 221-7276 | | | |

WETLAND MITIGATION SITE (VICINITY SITE MAP #2)

| | | | |
|---|---|---|---|
| Designer: | C.Curtis | Structure Numbers | |
| Detailer: | WRC | | |
| Sheet Subset: | WETLAND | Subset Sheets: | 1 of 1 |

Project No./Code: STA 0091-035 / 16439

Sheet Number 157

21698 9:42:52 AM S:\Tranproj\246220-05\14927\Consultants\Plot_Sets\SHELF\16439wetland01.dgn

| ITEM NUMBER | ITEM | UNIT | PROJECT TOTALS |
|---|---|---|---|
| 202-00250 | REMOVAL OF PAVEMENT MARKING | SF | 13,500 |
| 202-00805 | REMOVAL OF OVERHEAD SIGN STRUCTURE | EA | 1 |
| 202-00810 | REMOVAL OF GROUND SIGN | EA | 62 |
| 202-00821 | REMOVAL OF SIGN PANEL | EA | 16 |
| 202-00828 | REMOVAL OF TRAFFIC SIGNAL EQUIPMENT | LS | 1 |
| | | | |
| 210-00001 | RESET STRUCTURE | EA | 3 |
| 210-00815 | RESET SIGN PANEL | EA | 8 |
| 210-00809 | RESET BLANKOUT SIGN | EA | 2 |
| | | | |
| 503-00036 | DRILLED CAISSON (36 INCH) | LF | 30 |
| 503-00054 | DRILLED CAISSON (54 INCH) | LF | 42 |
| | | | |
| 613-00200 | 2 INCH ELECTRICAL CONDUIT | LF | 440 |
| 613-00300 | 3 INCH ELECTRICAL CONDUIT | LF | 2,185 |
| 613-10000 | WIRING | LS | 1 |
| 613-70400 | LUMINAIRE HIGH PRESSURE SODIUM (400 WATT) | EA | 4 |
| | | | |
| 614-00011 | SIGN PIANEL (CLASS I) | SF | 385 |
| 614-00012 | SIGN PANEL (CLASS II) | SF | 204 |
| 614-01512 | STEEL SIGN SUPPORT (2-INCH) (P) | EA | 432 |
| 614-01522 | STEEL SIGN SUPPORT (2-INCH ROUND) (SOCKET) | EA | 40 |
| 614-01575 | STEEL SIGN SUPPORT (2-1/2 INCH ROUND) (P) | EA | 230 |
| 614-01578 | STEEL SIGN SUPPORT (2-1/2 INCH ROUND NP-40) (SLIPBASE) | EA | 23 |
| 614-70150 | PEDESTRIAN SIGNAL FACE (16) (COUNTDOWN) | EA | 6 |
| 614-70336 | TRAFFIC SIGNAL FACE (12-12-12) | EA | 10 |
| 614-70560 | TRAFFIC SIGNAL FACE (12-12-12-12-12) | EA | 8 |
| 614-72860 | PEDESTRIAN PUSH BUTTON | EA | 6 |
| 614-72875 | LOOP DETECTOR WIRE | LF | 5,600 |

| ITEM NUMBER | ITEM | UNIT | PROJECT TOTALS |
|---|---|---|---|
| 614-73005 | PIEZO ELECTRIC TUBE, CLASS 2 | EA | 4 |
| 614-80000 | FLASHING BEACON | EA | 2 |
| 614-81140 | TRAFFIC SIGNAL LIGHT POLE STEEL (1-40 FOOT MAST ARM) | EA | 1 |
| 614-81145 | TRAFFIC SIGNAL LIGHT POLE STEEL (1-45 FOOT MAST ARM) | EA | 1 |
| 614-81175 | TRAFFIC SIGNAL LIGHT POLE STEEL (1-75 FOOT MAST ARM) | EA | 2 |
| 614-86245 | CONTROLLER (TYPE 170E) | EA | 1 |
| | | | |
| 621-00450 | DETOUR PAVEMENT | SY | 595 |
| | | | |
| 627-00005 | EPOXY PAVEMENT MARKING | GAL | 260 |
| 627-00012 | PAVEMENT MARKING PAINT (LOW VOC SOLVENT BASE) | GAL | 270 |
| 627-30405 | PREFORMED THERMOPLASTIC PAVEMENT MARKING (WORD-SYMBOL) | SF | 551 |
| 627-30410 | PREFORMED THERMOPLASTIC PAVEMENT MARKING (XWALK-STOP LINE) | SF | 1,762 |
| | | | |
| 630-00000 | FLAGGING | HR | 5,000 |
| 630-00007 | TRAFFIC CONTROL INSPECTION | DAY | 100 |
| 630-00012 | TRAFFIC CONTROL MANAGEMENT | DAY | 170 |
| 630-80335 | BARRICADE (TYPE 3 M-A) | EA | 4 |
| 630-80341 | CONSTRUCTION TRAFFIC SIGN (PANEL SIZE A) | EA | 30 |
| 630-80342 | CONSTRUCTION TRAFFIC SIGN (PANEL SIZE B) | EA | 108 |
| 630-80343 | CONSTRUCTION TRAFFIC SIGN (PANEL SIZE C) | EA | 12 |
| 630-80355 | PORTABLE MESSAGE SIGN PANEL | EA | 2 |
| 630-80356 | ADVANCE WARNING FLASHING OR SEQUENCING ARROW PANEL (A TYPE) | EA | 2 |
| 630-80360 | DRUM CHANNELIZING DEVICE | EA | 500 |
| 630-80363 | DRUM CHANNELIZING DEVICE (WITH LIGHT) (FLASHING) | EA | 50 |
| 630-80370 | CONCRETE BARRIER (TEMPORARY) | LF | 1,000 |
| 630-80380 | TRAFFIC CONE | EA | 300 |
| 630-85006 | IMPACT ATTENUATOR (SAND FILLED PLASTIC BARREL) (TEMPORARY) | EA | 2 |



PBSJ 4601 DTC Boulevard, Suite 700 Denver, CO 80237 Phone: (303) 221-7275 Fax: (303) 221-7276


R-X

Sheet Revisions

| Date: | Comments | Init. |
|---|---|---|
| | | |
| | | |
| | | |
| | | |


Colorado Department of Transportation
Mountain Residency, P.O. Box 399
Dumont, CO 80436
Phone: 303-512-5750 FAX: 303-512-5775
Region 1 DCW


As Constructed
No Revisions:
Revised:
Void:

TRAFFIC ENGINEERING TABULATION

Designer: SRB
Detailer: SRB
Sheet Subset: TRAFFIC
Structure Numbers
Subset Sheets: 1 of 1

Project No./Code
STA 0091-035
16439
Sheet Number 158


21698 9:43:30 AM S:\Tranproj\246220-05\14927\Consultants\Plot_Sets\SHELF\16439TrafficEngTAB01.dgn

## GENERAL NOTES (CHECK ALL BOXES THAT APPLY):

- [x] CONTROLLER SHALL BE I70E TYPE WITH A HC-11 CPU.
- [x] CONTROLLER CABINET SHALL BE A MODEL 333SD WITH A "44 CONTACT" INPUT FILE, MOUNTED ON A PRE-FORMED FIBERGLASS BASE. LOAD SWITCHES SHALL BE INPUT AND OUTPUT INDICATING. UPS SHALL BE PROVIDED TO RUN SIGNAL FOR 1 HOUR IN ALL PHASES, AND FLASH UP TO 2 ADDITIONAL HOURS.
- [x] POWER SOURCE SHALL BE A 240 VOLT 50 AMP SERVICE. IT SHALL INCLUDE A WEATHERPROOF NEMA CIRCUIT BREAKER BOX DISCONNECT. LOCATION OF CIRCUIT BREAKER BOX DISCONNECT TO BE DETERMINED BY THE ENGINEER.
- [x] ALL VEHICLE AND PEDESTRIAN INDICATIONS SHALL BE APPROVED SOLID STATE LED TYPE. ALL VEHICLE INDICATIONS SHALL BE 12". ALL PEDESTRIAN INDICATIONS SHALL BE 16". LUMINAIRES SHALL BE:
  [x] 400 WATT AT 40FT MOUNTING HEIGHT. [ ] 250 WATT AT 30FT MOUNTING HEIGHT.
- [ ] VIDEO DETECTION CAMERAS SHALL BE PROVIDED FOR EACH LEG OF THE INTERSECTION FOR UP TO 24 ZONES PER CAMERA, AND SHALL BE MOUNTED ON THE TRAFFIC SIGNAL LUMINAIRE ARM. IF A LUMINAIRE IS NOT USED, AN ARM SHALL BE PROVIDED AT 30FT ON THE TRAFFIC SIGNAL POLE FOR THE VIDEO CAMERA. FOR MAST ARMS 50 FT OR LONGER, VIDEO CAMERAS SHALL BE MOUNTED 30 FT HIGH ON CENTER OF THE MIDDLE TRAFFIC LANE WITH A SKY BRACKET MOUNT.
- [x] TRAFFIC SIGNALS MOUNTED ON MAST ARM SHALL BE FURNISHED WITH ASTRO-TYPE MOUNTING BRACKETS, AND SHALL INCLUDE LOUVERED BACKING PLATES. MAST ARMS SHALL BE OF SUFFICIENT LENGTH TO ALLOW ALL HEADS TO BE CENTERED OVER OUTBOUND LANES.
- [x] A SECOND LEFT TURN INDICATION WILL BE PROVIDED AT A POLE MOUNTED LOCATION IF A PROTECTED OR PROTECTED-PERMISSIVE TURN PHASE IS USED.
- [ ] INSTALLATION SHALL INCLUDE 8 ADA PEDESTRIAN PUSH BUTTONS. PEDESTRIAN PUSH BUTTONS SIGNS SHALL BE DECAL TYPE.
- [x] COLOR OF TRAFFIC SIGNAL POLES, PEDESTAL POLES, MAST ARM AND LUMINAIRE MAST ARM:
  [ ] GALVANIZED [x] SATIN BLACK [ ] BROWN [ ] GREEN
- [x] COLOR OF TRAFFIC SIGNAL HEADS:
  [ ] YELLOW [x] BLACK
- [x] ALL SIGNAL HEADS SHALL BE WIRED SEPARATELY FROM SIGNAL HEAD TO HANDHOLE ABOVE GRADE ON BASE OF SIGNAL POLE, WITH NO OVERHEAD SPLICES. A SEPARATE 21-CONDUCTOR CABLE SHALL RUN FROM THE CONTROLLER CABINET TO THE HANDHOLE AT EACH POLE WITH NO SPLICES.
- [ ] PHONE LINE COMMUNICATIONS SHALL BE PROVIDED AND TERMINATE TO AN RJ11 PHONE JACK WITH A SPIKE PROTECTION IN THE CONTROLLER CABINET. A US ROBOTICS 56K AUTO-ANSWER, AUTO-DIAL MODEM OR EQUIVALENT SHALL BE SUPPLIED.
- [x] CONTRACTOR SHALL INSTALL CDOT-SUPPLIED MARKERS FOR ALL BURIED PULL BOX LOCATIONS.
- [x] TRAFFIC SIGNAL CONTROLLER(S) SHALL BE DELIVERED TO REGION ONE FOR INSPECTION AND PROGRAMMING AT LEAST 15 DAYS PRIOR TO INSTALLATION. PHONE (303) 365-7313 FOR DELIVERY LOCATION.
- [x] NO OPEN TRENCHING SHALL BE DONE BETWEEN NOVEMBER 1 AND APRIL 15.
- [x] TELECOMMUNICATIONS INTERCONNECT SHALL BE 24 STRAND SINGLE MODE FIBER OPTIC CABLE INSTALLED IN 2" SCHEDULE 80PVC CONDUIT. FIBER OPTIC CABLE ASSEMBLIES THAT PROVIDE NO CONDUCTIVE PATH TO FACILITATE FUTURE UNDERGROUND LOCATES SHALL HAVE AN ADDITIONAL TRACE WIRE INSTALLED IN THE CONDUIT. FIBER MODEMS REQUIRED AT LOCALS AND MASTER SHALL BE F0512 EXTENSION WITH CABLE TO 170 OR EQUIVALENT. ALL FIBERS SHALL TERMINATE WITH FANOUT KITS AND ST CONNECTORS.
- [x] MAST ARMS SHALL BE DESIGNED TO SUPPORT LARGE STRUCTURES NAME SIGNS.
- [x] AS-BUILTS SHALL BE PROVIDED PRIOR TO SIGNAL OPERATION.
- [x] PRE-CONSTRUCTION MEETING SHALL BE HELD TWO WEEKS PRIOR TO ANY WORK AND SUBMITTALS ARE DUE AT THE TIME. ENTITIES AND CDOT SHALL BE INCLUDED IN PRE-CON MEETING AND NOTIFIED 5 WORKING DAYS IN ADVANCE OF THE MEETING WITH DATE AND LOCATION.
- [x] PLACEMENT OF SIGNAL AND PEDESTRIAN HEADS SHALL BE DETERMINED BY CDOT PERSONNEL.
- [x] THE SIGNAL SHALL NOT BE TURNED ON OR STARTED IN FLASH UNTIL CDOT HAS INSPECTED AND APPROVED THE INSTALLATION, AND APPROPRIATE PAVEMENT MARKINGS ARE IN PLACE.
- [x] APPROPRIATE SIGNS (LANE USE CONTROL SIGNS, SIGNAL AHEAD SIGNS) AND PAVEMENT MARKINGS (ARROWS, SYMBOLS ETC) SHALL BE IN PLACE AND APPROVED BY CDOT PERSONNEL. LANE USE CONTROL SIGNS ARE REQUIRED ON MOUNTAINOUS AREAS.
- [x] ALL POLE AND CONTROLLER LOCATIONS SHALL BE APPROVED BY CDOT PRIOR TO EXCAVATION.
- [ ] AN INTELLIGENT COMMUNICATION MODULE (ICM) OR APPROVED EQUIVALENT SHALL BE PROVIDED AT EACH MASTER CONTROLLER, OR AT AN ISOLATED INTERSECTION.
- [x] ALL USED OR EXCESS SIGNAL EQUIPMENT SHALL REMAIN THE PROPERTY OF CDOT AND DELIVERED TO THE NEAREST REGION 1 SIGNAL SHOP.
- [x] SIGNALS SHALL BE TURNED ON FLASH FOR 48 HRS OR AS DIRECTED BY THE ENGINEER PRIOR TO IMPLEMENTING FULL OPERATION. SIGNALS SHALL BE HARDWIRED PRIOR TO BEING PUT IN FLASH.
- [x] ALL TEMPORARY SIGNAL INSTALLATIONS SHALL HAVE VIDEO DETECTION IN PLACE AND OPERATIONAL PRIOR TO THE SIGNAL BEING TURNED ON.
- [x] PRIOR TO ANY MILLING (PLANNING OPERATION) AT SIGNALIZED INTERSECTIONS ALL VIDEO DETECTION CALLED OUT IN THE PLANS SHALL BE IN PLACE PRIOR TO THE START OF THE OPERATION AND SHALL BE OPERATIONAL. IN THE UNLIKELY EVENT THAT A LOOP IS CUT, A VIDEO DETECTION CAMERA SHALL BE INSTALLED AS AN INTERIM MEASURE DETECTION THAT CAN BE REPLACED. ALL VIDEO DETECTION CHANGES DURING MILLING OPERATION AND STRIPING RECONFIGURATIONS SHALL BE INCLUDED IN THE COST OF THE WORK.
- [x] CONTACT LIST NEEDS TO BE PROVIDED TO SIGNAL SUPERVISOR PRIOR TO BEGINNING ANY WORK FOR EMERGENCY REPAIRS.
- [x] CALL UTILITY NOTIFICATION CENTER OF COLORADO AT 1-800-922-1987 OR 303-232-1991 BEFORE YOU DIG.
- [x] EMERGENCY RESPONSE REQUIRED WITHIN 30 MINUTES OF NOTIFICATION OF SIGNAL MALFUNCTION; RESPONSE TO BE INCLUDED IN THE COST OF THE WORK.
- [ ] TEMPORARY PHASING AND TIMING PLANS ARE REQUIRED DURING CONSTRUCTION AND SHALL BE SUBMITTED TO SIGNAL SUPERVISOR FOR APPROVAL TWO WEEKS PRIOR TO IMPLEMENTATION.
- [x] CONTRACTORS' SIGNAL ELECTRICIAN IS REQUIRED TO BE ON SITE FOR BOTH AM & PM PEAK HOURS FOLLOWING THE NEXT DAY A SIGNAL IS TURNED ON TO OBSERVE OPERATION & MAKE ADJUSTMENTS AS NEEDED. THIS APPLIES TO BOTH PERMANENT AND TEMPORARY INSTALLATIONS.

LOCATION: SH 9/ TIGER ROAD



PBSJ 4601 DTC Boulevard, Suite 700 Denver, CO 80237 Phone: (303) 221-7275 Fax: (303) 221-7276


R-X

| Sheet Revisions | | |
|---|---|---|
| Date: | Comments | Init. |
| | | |
| | | |
| | | |
| | | |


Colorado Department of Transportation
Mountain Residency P.O. Box 399
Dumont, CO 80436
Phone: 303-512-5750 FAX: 303-512-5775
Region 1 DCW


As Constructed
No Revisions:
Revised:
Void:

R1 TRAFFIC SIGNAL NOTES

| | | | |
|---|---|---|---|
| Designer: | AMS | Structure Numbers | |
| Detailer: | AMS | | |
| Sheet Subset: | SIGNAL | Subset Sheets: | 1 of 3 |

Project No./Code
STA 0091-035
16439
Sheet Number 159

## LEGEND

- TRAFFIC SIGNAL HEAD
- TRAFFIC SIGNAL HEAD W/ BACKPLATE
- TR — ELECTRICAL CONDUIT
- PULL BOX
- TRAFFIC SIGNAL CONTROLLER AND CABINET
- EMERGENCY VEHICLE PRE-EMPTION DETECTION DEVICE
- PEDESTRIAN PUSH BUTTON
- PEDESTRIAN SIGNAL FACE (HAND-N-MAN)
- LUMINAIRE ARM WITH LUMINAIRE
- (A) SIGNAL POLE I.D.
- (1) SIGNAL HEAD I.D.
- METER PEDESTAL
- TRAFFIC SIGNAL POLE AND MAST ARM
- LOOP DETECTOR (DUAL)
- LOOP DETECTOR (SINGLE)
- PULL BOX (SPECIAL)

## PROPOSED PHASE DIAGRAM

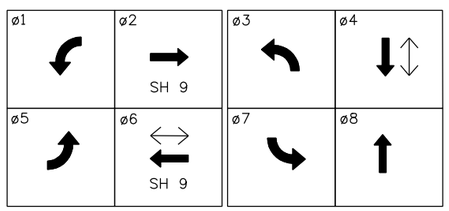


## SIGNAL HEAD

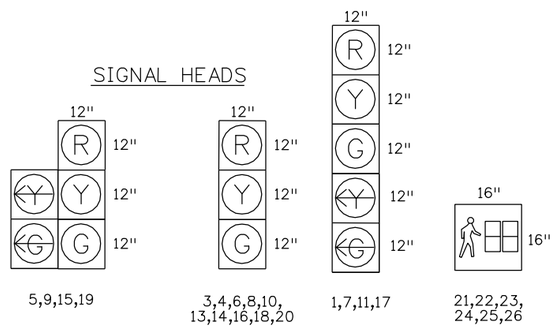


## SIGNAL/LUMINAIRE POLE SCHEDULE

| POLE NUMBER | (A) | (B) | (C) | (D) |
|---|---|---|---|---|
| LOCATION | SW CORNER | NW CORNER | NE CORNER | SE CORNER |
| MAST ARM LENGTH | 75' | 40' | 75' | 45' |
| NORTHING | 1619965.80 | 1620036.40 | 1620024.42 | 1619925.40 |
| EASTING | 2847884.84 | 2847903.73 | 2848056.86 | 2848020.20 |

## TRAFFIC SIGNAL QUANTITIES

| ITEM NO. | ITEM DESRIPTION | UNIT | TIGER RD TOTALS |
|---|---|---|---|
| 202-00828 | REMOVAL OF TRAFFIC SIGNAL EQUIPMENT | LS | 1 |
| 503-00036 | DRILLED CAISSON (36 INCH) | LF | 30 |
| 503-00054 | DRILLED CAISSON (54 INCH) | LF | 42 |
| 613-00200 | 2 INCH ELECTRICAL CONDUIT | LF | 440 |
| 613-00300 | 3 INCH ELECTRICAL CONDUIT | LF | 2,185 |
| 613-10000 | WIRING | LS | 1 |
| 613-70400 | LUMINAIRE HIGH PRESSURE SODIUM (400 WATT) | EA | 4 |
| 614-70150 | PEDESTRIAN SIGNAL FACE (16) (COUNTDOWN) | EA | 6 |
| 614-70336 | TRAFFIC SIGNAL FACE (12-12-12) | EA | 10 |
| 614-70560 | TRAFFIC SIGNAL FACE (12-12-12-12-12) | EA | 8 |
| 614-72860 | PEDESTRIAN PUSH BUTTON | EA | 6 |
| 614-72875 | LOOP DETECTOR WIRE | LF | 5,600 |
| 614-81140 | TRAFFIC SIGNAL LIGHT POLE STEEL (1-40 FOOT MAST ARM) | EA | 1 |
| 614-81145 | TRAFFIC SIGNAL LIGHT POLE STEEL (1-45 FOOT MAST ARM) | EA | 1 |
| 614-81175 | TRAFFIC SIGNAL LIGHT POLE STEEL (1-75 FOOT MAST ARM) | EA | 2 |
| 614-86245 | CONTROLLER (TYPE 170E) | EA | 1 |

NOTES:

1. ALL SIGNAL LENSES SHALL BE LED.
2. THE COST OF PULL BOXES SHALL BE INCLUDED IN THE COST OF ELECTRICAL CONDUIT.
3. RESETTING OF EMERGENCY PRE-EMPTION DETECTION DEVICES WILL NOT BE MEASURED AND PAID FOR SEPARATELY, BUT SHALL BE INCLUDED IN THE COST OF THE WORK.
4. ALL LOOP DETECTOR LOCATIONS SHALL BE FIELD VERIFIED WITH A CDOT REPRESENTATIVE.
5. THE COST OF THE REMOVAL OF THE EXISTING PEDESTRIAN SIGNAL POLE IS INCLUDED IN THE REMOVAL OF TRAFFIC SIGNAL EQUIPMENT.

Know what's below. Call before you dig.

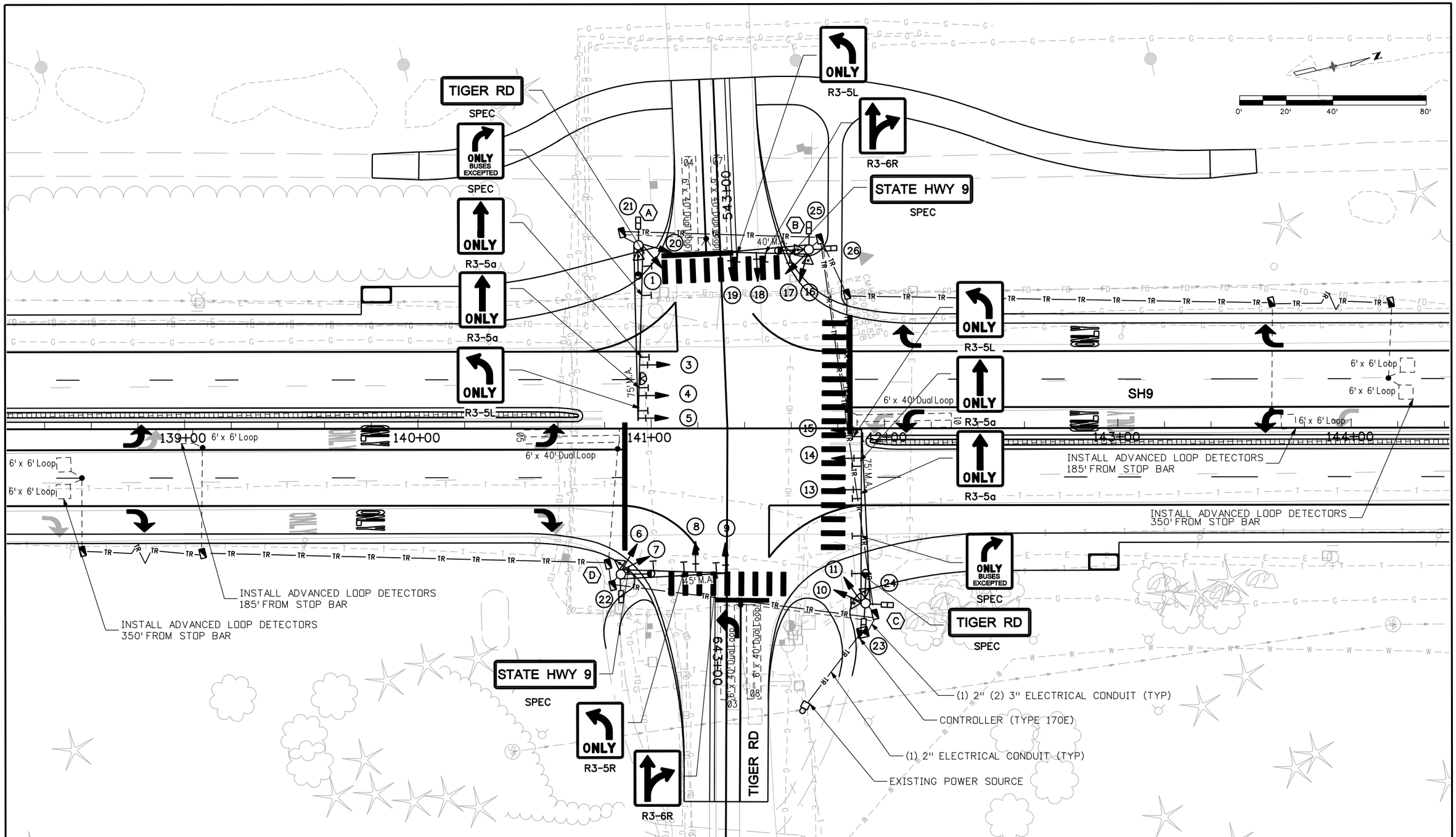


| | | | |
|---|---|---|---|
| Print Date: 1/26/2009 | | | |
| File Name: 16439SignalPlan02.dgn | | | |
| Horiz. Scale: 1:40.0309 | Vert. Scale: As Noted | | |
| Unit Information | Unit Leader Initials | | |
| PBSJ 4601 DTC Boulevard, Suite 700 Denver, CO 80237 Phone: (303) 221-7275 Fax: (303) 221-7276 | | | |

R-X

| Sheet Revisions | | |
|---|---|---|
| Date: | Comments | Init. |
| | | |
| | | |
| | | |
| | | |

Colorado Department of Transportation

DOT DEPARTMENT OF TRANSPORTATION

Mountain Residency P.O. Box 399
Dumont, CO 80436
Phone: 303-512-5750 FAX: 303-512-5775

Region 1 DCW

| As Constructed |
|---|
| No Revisions: |
| Revised: |
| Void: |

SH 9 & TIGER ROAD
TRAFFIC SIGNAL PLAN

| | | | |
|---|---|---|---|
| Designer: | AMS | Structure Numbers | |
| Detailer: | AMS | | |
| Sheet Subset: | SIGNAL | Subset Sheets: | 3 of 3 |

| Project No./Code |
|---|
| STA 0091-035 |
| 16439 |
| Sheet Number 161 |

# TABULATION OF SIGNS

| SIGN NO. | SIGN CODE | LOCATION | SIGN PANEL SIZE | BACKGROUND COLOR | REMOVAL OF GROUND SIGN | REMOVAL OF SIGN PANEL | REMOVAL OF OVERHEAD SIGN STRUCTURE | RESET STRUCTURE | RESET SIGN PANEL | RESET BLANKOUT SIGN | NO. OF POSTS | POST TYPE (FEET) | | SIGN PANEL (SQ FT) | | | STEEL SIGN SUPP (2 IN RD) (SOCK) | STEEL SIGN SUPP (2-1/2 IN RD NP40) (SLIP) | T-Brkt * | REMARKS |
|---|---|---|---|---|---|---|---|---|---|---|---|---|---|---|---|---|---|---|---|---|
| | | | | | | | | | | | | STEEL POST P | STEEL POST P1 | CLASS I | CLASS II | CLASS III | (P Base) | (P1 Base) | | |
| SH 9 | | | | | | | | | | | | | | | | | | | | |
| 1 | SPECIAL | 130+72 R | 72 x 42 | BROWN | 1 | | | | | | 2 | | 10.5 | | 21.00 | | | 2 | | |
| 2 | R1-1 | 131+60 L | 30 x 30 | RED | 1 | | | | | | | | | | | | | | | |
| 3 | R1-1 | 131+71 L | 30 x 30 | RED | 1 | | | | | | | | | | | | | | | |
| 4 | R1-1 | 132+19 L | 30 x 30 | RED | 1 | | | | | | | | | | | | | | | |
| 5 | R3-7R | 133+12 L | 30 x 30 | WHITE | 1 | | | | | | | | | | | | | | | |
| 6a | W8-6 | 133+37 L | 30 x 30 | YELLOW | 1 | | | | | | | | | | | | | | | |
| 6b | SPECIAL | 133+37 L | 24 x 18 | YELLOW | | | | | | | | | | | | | | | | |
| 7a | D7-51aR | 133+37 R | 57 x 48 | BROWN | 1 | | | | | | 1 | | 12.5 | | 19.00 | | | 1 | | |
| 7b | SPECIAL | 133+37 R | 48 x 18 | BROWN | | | | | | | | | | | 6.00 | | | | | |
| 8 | W11-8 | 134+52 R | 36 x 36 | YELLOW | 1 | | | | | | 1 | | 10.0 | | 9.00 | | | 1 | | |
| 9a | W3-3 | 135+55 R | 36 x 36 | YELLOW | 1 | | | | | | 1 | | 11.0 | | 9.00 | | | 1 | | |
| 9b | SPECIAL | 135+55 R | 36 x 12 | YELLOW | | | | | | | | | | | 3.00 | | | | | |
| 10 | R3-7R | 135+58 L | 30 x 30 | WHITE | 1 | | | | | | | | | | | | | | | |
| 11a | R3-7R | 136+55 R | 30 x 30 | WHITE | 1 | | | | | | 1 | 12.0 | | 6.25 | | | 1 | | | |
| 11b | SPECIAL | 136+55 R | 30 x 18 | WHITE | | | | | | | | | | 3.75 | | | | | | |
| 12 | BLANKOUT | 139+06 L | 48 x 48 | BLANKOUT | | | | | | 1 | | | | | | | | | | RESET INCLUDES BASE, FOUNDATION, AND ELECTRICAL |
| 13a | R3-7R | 140+64 R | 30 x 30 | WHITE | 1 | | | | | | 1 | 12.0 | | 6.25 | | | 1 | | | |
| 13b | SPECIAL | 140+64 R | 30 x 18 | WHITE | | | | | | | | | | 3.75 | | | | | | |
| 14 | R4-7 | 140+65 M | 24 x 30 | WHITE | | | | | | | 1 | 10.5 | | 5.00 | | | 1 | | | |
| 15a | R3-5L | 140+84 R | 24 x 30 | WHITE | | 1 | | | | | | | | 5.00 | | | | | | MOUNTED ON MAST ARM |
| 15b | R3-6R | 140+84 R | 24 x 30 | WHITE | | 1 | | | | | | | | 5.00 | | | | | | MOUNTED ON MAST ARM |
| 15c | SPECIAL | 140+84 R | 24 x 30 | WHITE | | 1 | | | | | | | | | | | | | | MOUNTED ON MAST ARM |
| 15d | SPECIAL | 140+84 R | 72 x 12 | GREEN | | 1 | | | | | | | | 6.00 | | | | | | MOUNTED ON MAST ARM |
| 16a | R3-5L | 140+89 L | 24 x 30 | WHITE | | 1 | | | | | | | | 5.00 | | | | | | MOUNTED ON MAST ARM |
| 16b | R3-5a | 140+89 L | 24 x 30 | WHITE | | 1 | | | | | | | | 5.00 | | | | | | MOUNTED ON MAST ARM |
| 16c | R3-5a | 140+89 L | 24 x 30 | WHITE | | 1 | | | | | | | | 5.00 | | | | | | MOUNTED ON MAST ARM |
| 16d | SPECIAL | 140+89 L | 24 x 30 | WHITE | | | | | | | | | | 5.00 | | | | | | MOUNTED ON MAST ARM |
| 16e | SPECIAL | 140+89 L | 60 x 12 | GREEN | | 1 | | | | | | | | 5.00 | | | | | | MOUNTED ON MAST ARM |
| 17a | R5-3 | 141+00 L | 24 x 24 | WHITE | 1 | | | | | | 1 | 12.5 | | 4.00 | | | 1 | | | |
| 17b | R1-1 | 141+00 L | 30 x 30 | RED | | | | | | | | | | 6.25 | | | | | | |
| 18 | SPECIAL | 141+51 L | 48 x 36 | BROWN | | | | | | | | | | | 12.00 | | | | | |
| 19a | R3-6L | 141+70 L | 24 x 30 | WHITE | | 1 | | | | | | | | | | | | | | MOUNTED ON MAST ARM |
| 19b | R3-5R | 141+70 L | 24 x 30 | WHITE | | 1 | | | | | | | | | | | | | | MOUNTED ON MAST ARM |
| 19c | R3-5L | 141+70 L | 24 x 30 | WHITE | | | | | | | | | | 5.00 | | | | | | MOUNTED ON MAST ARM |
| 19d | R3-6R | 141+70 L | 24 x 30 | WHITE | | | | | | | | | | 5.00 | | | | | | MOUNTED ON MAST ARM |
| 19e | SPECIAL | 141+70 L | 72 x 12 | GREEN | | 1 | | | | | | | | 6.00 | | | | | | MOUNTED ON MAST ARM |
| 20a | SPECIAL | 141+65 L | 48 x 18 | BROWN | 1 | | | | | | | | | | | | | | | |
| 20b | SPECIAL | 141+65 L | 42 x 36 | BROWN | | | | | | | | | | | | | | | | |
| 21a | R5-3 | 141+68 L | 24 x 24 | WHITE | | | | | | | 1 | 12.5 | | 4.00 | | | 1 | | | |
| 21b | R1-1 | 141+68 L | 30 x 30 | RED | 1 | | | | | | | | | 6.25 | | | | | | |
| **TOTAL SHEET 1** | | | | | **15** | **11** | | | | **1** | **10** | **59.5** | **44** | **102.5** | **79** | | **5** | **5** | | |

21698 9:47:12 AM S:\Tranproj\246220-05\14927\Consultants\Plot_Sets\SHELF\16439TABS-Signing01.dgn

Print Date: 1/26/2009
File Name: 16439TABS-Signing01.dgn
Horiz. Scale: 1:1 Vert. Scale: As Noted
Unit Information Unit Leader Initials

PBSJ 4601 DTC Boulevard, Suite 700
Denver, CO 80237
Phone: (303) 221-7275 Fax: (303) 221-7276

Sheet Revisions

| Date: | Comments | Init. |
|---|---|---|
| | | |
| | | |
| | | |
| | | |

Colorado Department of Transportation
Mountain Residency P.O. Box 399
Dumont, CO 80436
Phone: 303-512-5750 FAX: 303-512-5775
Region 1 DCW

As Constructed
No Revisions:
Revised:
Void:

TABULATION OF SIGNING

Designer: AMS
Detailer: MJ
Sheet Subset: SIGN&STRIPE
Structure Numbers
Subset Sheets: 1 of 16

Project No./Code
STA 0091-035
16439
Sheet Number 162

# TABULATION OF SIGNS

| SIGN NO. | SIGN CODE | LOCATION | SIGN PANEL SIZE | BACKGROUND COLOR | REMOVAL OF GROUND SIGN | REMOVAL OF SIGN PANEL | REMOVAL OF OVERHEAD SIGN STRUCTURE | RESET STRUCTURE | RESET SIGN PANEL | RESET BLANKOUT SIGN | NO. OF POSTS | POST TYPE (FEET) | | SIGN PANEL (SQ FT) | | | STEEL SIGN SUPP (2 IN RD) (SOCK) (P Base) | STEEL SIGN SUPP (2-1/2 IN RD NP40) (SLIP) (P1 Base) | T-Brkt * | REMARKS |
|---|---|---|---|---|---|---|---|---|---|---|---|---|---|---|---|---|---|---|---|---|
| | | | | | | | | | | | | STEEL POST P | STEEL POST P1 | CLASS I | CLASS II | CLASS III | | | | |
| 22a | R3-5L | 141+96 R | 24 x 30 | WHITE | | 1 | | | | | | | | 5.00 | | | | | | MOUNTED ON MAST ARM |
| 22b | R3-5a | 141+96 R | 24 x 30 | WHITE | | 1 | | | | | | | | 5.00 | | | | | | MOUNTED ON MAST ARM |
| 22c | R3-5a | 141+96 R | 24 x 30 | WHITE | | 1 | | | | | | | | 5.00 | | | | | | MOUNTED ON MAST ARM |
| 22d | R3-5R | 141+96 R | 24 x 30 | WHITE | | 1 | | | | | | | | | | | | | | MOUNTED ON MAST ARM |
| 22e | SPECIAL | 141+96 R | 24 x 30 | WHITE | | | | | | | | | | 5.00 | | | | | | MOUNTED ON MAST ARM |
| 22f | SPECIAL | 141+96 R | 60 x 12 | GREEN | | 1 | | | | | | | | 5.00 | | | | | | MOUNTED ON MAST ARM |
| 23 | R4-7 | 141+98 M | 24 x 30 | WHITE | | | | | | | 1 | 10.5 | | 5.00 | | | 1 | | | |
| 24a | R3-7R | 142+21 L | 30 x 30 | WHITE | | | | | | | 1 | 12.0 | | 6.25 | | | 1 | | | |
| 24b | SPECIAL | 142+21 L | 30 x 18 | WHITE | | | | | | | | | | 3.75 | | | | | | |
| 25 | BLANKOUT | 143+92 R | 48 x 48 | BLANKOUT | | | | | | 1 | | | | | | | | | | RESET INCLUDES BASE, FOUNDATION, AND ELECTRICAL |
| 26a | W3-3 | 145+42 L | 36 x 36 | YELLOW | 1 | | | | | | 1 | | 11.0 | | 9.00 | | | 1 | | SET NEW SIGN AT 146+84 |
| 26b | SPECIAL | 145+42 L | 36 x 12 | YELLOW | | | | | | | | | | 3.00 | | | | | | |
| 27a | R3-7R | 146+00 L | 30 x 30 | WHITE | | | | | | | 1 | 12.0 | | 6.25 | | | 1 | | | |
| 27b | SPECIAL | 146+00 L | 30 x 18 | WHITE | | | | | | | | | | 3.75 | | | | | | |
| 28a | D9-1 | 146+28 L | 24 x 24 | BLUE | 1 | | | | | | 1 | 11.5 | | 4.00 | | | 1 | | | SET NEW SIGN AT 147+63 |
| 28b | D9-9 | 14+28 L | 24 x 24 | BLUE | | | | | | | | | | 4.00 | | | | | | |
| 28c | D5-5bL | 146+28 L | 30 x 6 | BLUE | | | | | | | | | | 1.25 | | | | | | |
| 29 | W11-8 | 147+81 L | 36 x 36 | YELLOW | 1 | | | | | | 1 | | 10.0 | | 9.00 | | | 1 | | SET NEW SIGN AT 149+30 |
| 30a | D7-51aL | 150+50 L | 57 x 48 | BROWN | | | | | 1 | | 1 | | 12.5 | | | | | 1 | | |
| 30b | SPECIAL | 150+50 L | 48 x 18 | BROWN | | | | | 1 | | | | | | | | | | | |
| 31 | SPECIAL | 152+95 L | 72 x 42 | BROWN | 1 | | | | | | 2 | | 10.5 | | 21.00 | | | 2 | | |
| 32a | D9-3a | 153+32 R | 24 x 24 | BLUE | 1 | | | | | | 1 | 10.5 | | 4.00 | | | 1 | | | |
| 32b | D5-5bR | 153+32 R | 24 x 6 | BLUE | | | | | | | | | | 1.00 | | | | | | |
| 33a | R3-7R | 155+60 R | 30 x 30 | WHITE | 1 | | | | | | | | | | | | | | | |
| 33b | SPECIAL | 155+60 R | 30 x 12 | WHITE | | | | | | | | | | | | | | | | |
| 34a | W2-2R | 157+15 R | 36 x 36 | YELLOW | 1 | | | | | | 1 | | 12.0 | | 9.00 | | | 1 | | |
| 34b | SPECIAL | 157+15 R | 36 x 12 | YELLOW | | | | | | | | | | | | | | | | |
| 34c | SPECIAL | 157+15 R | 42 x 12 | YELLOW | | | | | | | | | | | 3.50 | | | | | |
| 35 | R4-50 | 157+90 L | 36 x 48 | WHITE | 1 | | | | | | | | | | | | | | | |
| 36 | R3-7R | 158+60 R | 30 x 30 | WHITE | 1 | | | | | | 1 | 10.5 | | 6.25 | | | 1 | | | |
| 37 | OM3-R | 161+67 R | 12 x 36 | YELLOW | 1 | | | | | | | | | | | | | | | |
| 38 | OM3-R | 161+75 R | 12 x 36 | YELLOW | 1 | | | | | | | | | | | | | | | |
| 39 | OM3-R | 161+83 R | 12 x 36 | YELLOW | 1 | | | | | | | | | | | | | | | |
| 40a | R3-7R | 161+95 R | 30 x 30 | WHITE | 1 | | | | | | 1 | 12.0 | | 6.25 | | | 1 | | | |
| 40b | SPECIAL | 161+95 R | 30 x 18 | WHITE | | | | | | | | | | 3.75 | | | | | | |
| 41 | R4-7 | 162+05 M | 24 x 30 | WHITE | | | | | | | 1 | 10.5 | | 5.00 | | | 1 | | | |
| 42a | SPECIAL | 162+81 R | 42 x 12 | GREEN | 1 | | | | | | 1 | 11.5 | | 3.50 | | | 1 | | | |
| 42b | R1-1 | 162+81 R | 30 x 30 | RED | | | | | | | | | | 6.25 | | | | | | |
| 43 | R4-7 | 163+20 M | 24 x 30 | WHITE | 1 | | | | | | 1 | 10.5 | | 5.00 | | | 1 | | | SET NEW SIGN AT 162+75 |
| 44a | SPECIAL | 164+21 R | 60 x 96 | GREEN | | | 1 | | | | | | | | | | | | | REMOVAL INCLUDES SIGNS & FOOTINGS SEE 202.04 |
| 44b | SPECIAL | 164+21 R | 72 x 96 | GREEN | | | | | | | | | | | | | | | | |
| **TOTAL SHEET 2** | | | | | **15** | **5** | **1** | | **2** | **1** | **16** | **111.5** | **56** | **103.25** | **51.5** | | **10** | **6** | | |

Print Date: 1/26/2009
File Name: 16439TABS-Signing02.dgn
Horiz. Scale: 1:1 Vert. Scale: As Noted
Unit Information Unit Leader Initials

PBSJ 4601 DTC Boulevard, Suite 700
Denver, CO 80237
Phone: (303) 221-7275 Fax: (303) 221-7276

Sheet Revisions

| Date: | Comments | Init. |
|---|---|---|
| | | |
| | | |
| | | |
| | | |

Colorado Department of Transportation
Mountain Residency P.O. Box 399
Dumont, CO 80436
Phone: 303-512-5750 FAX: 303-512-5775
Region 1 DCW

As Constructed
No Revisions:
Revised:
Void:

TABULATION OF SIGNING
Designer: AMS
Detailer: MJ
Sheet Subset: SIGN&STRIPE
Structure Numbers
Subset Sheets: 2 of 16

Project No./Code
STA 0091-035
16439
Sheet Number 163

21698 9:47:30 AM S:\Tranproj\246220-05\14927\Consultants\Plot_Sets\SHELF\16439TABS-Signing02.dgn

# TABULATION OF SIGNS

| SIGN NO. | SIGN CODE | LOCATION | SIGN PANEL SIZE | BACKGROUND COLOR | REMOVAL OF GROUND SIGN | REMOVAL OF SIGN PANEL | REMOVAL OF OVERHEAD SIGN STRUCTURE | RESET STRUCTURE | RESET SIGN PANEL | RESET BLANKOUT SIGN | NO. OF POSTS | POST TYPE (FEET) | | SIGN PANEL (SQ FT) | | | STEEL SIGN SUPP (2 IN RD) (SOCK) (P Base) | STEEL SIGN SUPP (2-1/2 IN RD NP40) (SLIP) (P1 Base) | T-Brkt * | REMARKS |
|---|---|---|---|---|---|---|---|---|---|---|---|---|---|---|---|---|---|---|---|---|
| | | | | | | | | | | | | STEEL POST P | STEEL POST P1 | CLASS I | CLASS II | CLASS III | | | | |
| 45a | D9-3a | 165+15 L | 24 x 24 | BLUE | 1 | | | | | | 1 | 10.5 | | 4.00 | | | 1 | | | |
| 45b | D5-5bL | 165+15 L | 24 x 6 | BLUE | | | | | | | | | | 1.00 | | | | | | |
| 46a | W2-2L | 166+22 L | 30 x 30 | YELLOW | 1 | | | | | | | | | | | | | | | |
| 46b | SPECIAL | 166+22 L | 36 x 12 | YELLOW | | | | | | | | | | | | | | | | |
| 47 | W9-2R | 167+20 R | 36 x 36 | YELLOW | 1 | | | | | | | | | | | | | | | |
| 48a | W9-2R | 167+33 L | 36 x 36 | YELLOW | 1 | | | | | | | | | | | | | | | |
| 48b | W16-2 (1500) | 167+33 L | 24 x 12 | YELLOW | | | | | | | | | | | | | | | | |
| 49a | W2-2L | 167+35 L | 36 x 36 | YELLOW | | | | | | | 1 | | 11.0 | | 9.00 | | | 1 | | |
| 49b | SPECIAL | 167+35 L | 42 x 12 | YELLOW | | | | | | | | | | | 3.50 | | | | | |
| 50 | SPECIAL | 167+90 R | 12 x 18 | WHITE | | | | | | | 1 | 7.0 | | 1.50 | | | 1 | | | |
| 51 | SPECIAL | 167+98 R | 36 x 24 | GREEN | 1 | | | | | | | | | | | | | | | |
| 52 | SPECIAL | 168+02 L | 42 x 30 | GREEN | | | | | | | 1 | | 10.5 | 8.75 | | | | 1 | | |
| 53 | SPECIAL | 168+33 R | 42 x 30 | GREEN | | | | | | | 1 | | 10.5 | 8.75 | | | | 1 | | |
| 54 | SPECIAL | 168+35 L | 36 x 24 | GREEN | 1 | | | | | | | | | | | | | | | |
| 55 | SPECIAL | 168+50 L | 12 x 18 | WHITE | | | | | | | 1 | 7.0 | | 1.50 | | | 1 | | | |
| 56a | W2-2L | 169+13 R | 36 x 36 | YELLOW | 1 | | | | | | 1 | | 11.0 | | 9.00 | | | 1 | | |
| 56b | SPECIAL | 169+13 R | 42 x 12 | YELLOW | | | | | | | | | | 3.50 | | | | | | |
| 57 | W9-1L | 171+12 R | 36 x 36 | YELLOW | 1 | | | | | | | | | | | | | | | |
| 58 | R4-7 | 172+95 L | 24 x 30 | WHITE | 1 | | | | | | | | | | | | | | | |
| 59 | R1-1 | 173+19 L | 30 x 30 | RED | 1 | | | | | | | | | | | | | | | |
| 60a | SPECIAL | 173+22 L | 48 x 36 | BROWN | | | | | 1 | | 1 | | 12.0 | | | | | 1 | | |
| 60b | SPECIAL | 173+22 L | 48 x 12 | BROWN | | | | | 1 | | | | | | | | | | | |
| 61a | R5-3 | 173+36 L | 24 x 24 | WHITE | 1 | | | | | | 1 | 12.5 | | 4.00 | | | 1 | | | |
| 61b | R1-1 | 173+36 L | 30 x 30 | RED | | | | | | | | | | 6.25 | | | | | | |
| 62 | SPECIAL | 173+88 L | 36 x 12 | GREEN | 1 | | | | | | | | | | | | | | | |
| 63 | W4-2 | 174+12 R | 36 x 36 | YELLOW | 1 | | | | | | | | | | | | | | | |
| 64 | SPECIAL | 174+22 R | 36 x 36 | ORANGE | | | | | 1 | | 1 | | 11.0 | | | | | 1 | | |
| 65a | R1-1 | 174+21 L | 30 x 30 | RED | 1 | | | | | | 1 | 10.5 | | 6.25 | | | 1 | | | |
| 65b | R5-3 | 174+21 L | 24 x 24 | WHITE | | | | | | | | | | 4.00 | | | | | | |
| 66a | SPECIAL | 174+29 L | 48 x 36 | BROWN | | | | | 1 | | 1 | | 11.5 | | | | | 1 | | |
| 66b | SPECIAL | 174+29 L | 48 x 18 | BROWN | | | | | 1 | | | | | | | | | | | |
| 67a | SPECIAL | 174+85 L | 48 x 12 | GREEN | | | | | | | 1 | 11.5 | | 4.00 | | | 1 | | | |
| 67b | R1-1 | 174+85 L | 30 x 30 | RED | | | | | | | | | | 6.25 | | | | | | |
| 68 | W11-1 | 174+00 L | 24 x 24 | YELLOW | 1 | | | | | | 1 | 10.5 | | 4.00 | | | 1 | | | |
| 69 | R2-1(30) | 174+85 L | 24 x 30 | WHITE | 1 | | | | | | 1 | 10.5 | | 5.00 | | | 1 | | | |
| 70 | R4-7 | 175+16 M | 24 x 30 | WHITE | | | | | | | 1 | 10.5 | | 5.00 | | | 1 | | | |
| **TOTAL SHEET 3** | | | | | **16** | | | | **5** | | **16** | **90.5** | **77.5** | **73.75** | **21.5** | | **9** | **7** | | |

21698 9:47:50 AM S:\Tranproj\246220-05\14927\Consultants\Plot_Sets\SHELF\16439TABS-Signing03.dgn

Print Date: 1/26/2009
File Name: 16439TABS-Signing03.dgn
Horiz. Scale: 1:1 Vert. Scale: As Noted
Unit Information Unit Leader Initials

PBSJ 4601 DTC Boulevard, Suite 700
Denver, CO 80237
Phone: (303) 221-7275 Fax: (303) 221-7276

Sheet Revisions

| Date: | Comments | Init. |
|---|---|---|
| | | |
| | | |
| | | |
| | | |

Colorado Department of Transportation
Mountain Residency P.O. Box 399
Dumont, CO 80436
Phone: 303-512-5750 FAX: 303-512-5775
Region 1 DCW

As Constructed
No Revisions:
Revised:
Void:

TABULATION OF SIGNING

Designer: AMS
Detailer: MJ
Structure Numbers
Sheet Subset: SIGN&STRIPE
Subset Sheets: 3 of 16

Project No./Code
STA 0091-035
16439
Sheet Number 164

# TABULATION OF SIGNS

| SIGN NO. | SIGN CODE | LOCATION | SIGN PANEL SIZE | BACKGROUND COLOR | REMOVAL OF GROUND SIGN | REMOVAL OF SIGN PANEL | REMOVAL OF OVERHEAD SIGN STRUCTURE | RESET STRUCTURE | RESET SIGN PANEL | RESET BLANKOUT SIGN | NO. OF POSTS | POST TYPE (FEET) | | SIGN PANEL (SQ FT) | | | STEEL SIGN SUPP (2 IN RD) (SOCK) (P Base) | STEEL SIGN SUPP (2-1/2 IN RD NP40) (SLIP) (P1 Base) | T-Brkt * | REMARKS |
|---|---|---|---|---|---|---|---|---|---|---|---|---|---|---|---|---|---|---|---|---|
| | | | | | | | | | | | | STEEL POST P | STEEL POST P1 | CLASS I | CLASS II | CLASS III | | | | |
| 71 | SPECIAL | 175+39 L | 48 x 48 | YELLOW | 1 | | | | | | | | | | 16.00 | | | | | |
| 72 | R4-7 | 175+83 M | 24 x 30 | WHITE | | | | | | | 1 | 10.5 | | 5.00 | | | 1 | | | |
| 73 | R3-7R | 176+23 L | 30 x 30 | WHITE | 1 | | | | | | 1 | 10.5 | | 6.25 | | | 1 | | | |
| 74 | W11-3 | 178+16 R | 36 x 36 | YELLOW | 1 | | | | | | 1 | | 10.0 | | 9.00 | | | 1 | | |
| 75 | R3-7R | 178+86 L | 30 x 30 | WHITE | | | | | | | 1 | 10.5 | | 6.25 | | | 1 | | | |
| 76a | W2-2R | 179+00 L | 36 x 36 | YELLOW | 1 | | | | | | 1 | | 11.0 | | 9.00 | | | 1 | | SET NEW SIGN AT 180+05 |
| 76b | SPECIAL | 179+00 L | 42 x 12 | YELLOW | | | | | | | | | | 3.50 | | | | | | SET NEW SIGN AT 180+06 |
| 77a | D50-1c (2) | 180+78 L | 24 x 24 | PURPLE | 1 | | | | | | 1 | 11.0 | | 4.00 | | | 1 | | | |
| 77b | D50-1c | 180+78 L | 24 x 12 | PURPLE | | | | | | | | | | 2.00 | | | | | | |
| 78a | D10-2 (91) | 180+88 R | 10 x 27 | GREEN | 1 | | | | | | 1 | 9.5 | | 1.88 | | | 1 | | | |
| 78b | D10-2 (91) | 180+88 R | 10 x 27 | GREEN | | | | | | | | | | 1.88 | | | | | | |
| 79a | D50-1c (2) | 180+95 R | 24 x 24 | PURPLE | 1 | | | | | | 1 | 11.0 | | 4.00 | | | 1 | | | |
| 79b | D50-1c | 180+95 R | 24 x 12 | PURPLE | | | | | | | | | | 2.00 | | | | | | |
| 80 | SPECIAL | 183+04 L | 36 x 36 | ORANGE | | | | | 1 | | 1 | | 11.0 | | | | | 1 | | |
| 81 | W1-2L | 184+35 R | 36 x 36 | YELLOW | 1 | | | | | | 1 | | 10.0 | | 9.00 | | | 1 | | |
| 82 | W6-3 | 187+30 R | 36 x 36 | YELLOW | 1 | | | | | | | | | | | | | | | |
| 83 | R4-7 | 214+55 M | 24 x 30 | WHITE | | | | | | | 1 | 10.5 | | 5.00 | | | 1 | | | |
| 84 | W1-2R | 215+21 L | 36 x 36 | YELLOW | 1 | | | | | | 1 | | 10.0 | | 9.00 | | | 1 | | |
| 85 | R4-7 | 215+35 M | 24 x 30 | WHITE | | | | | | | 1 | 10.5 | | 5.00 | | | 1 | | | |
| 86a | W11-5 | 215+55 L | 30 x 30 | YELLOW | 1 | | | | | | 1 | 11.0 | | 6.25 | | | 1 | | | |
| 86b | R1-2 | 215+55 L | 36 x 36 | WHITE | | | | | | | | | | 4.50 | | | | | | |
| 87a | W11-5 | 218+07 L | 30 x 30 | YELLOW | 1 | | | | | | 1 | 11.0 | | 6.25 | | | 1 | | | |
| 87b | R1-2 | 218+07 L | 36 x 36 | WHITE | | | | | | | | | | 4.50 | | | | | | |
| 88 | W2-2R | 222+52 R | 36 x 36 | YELLOW | 1 | | | | | | | | | | | | | | | |
| 89 | R3-7R | 230+00 R | 30 x 30 | WHITE | 1 | | | | | | 1 | 10.5 | | 6.25 | | | 1 | | | |
| 90 | W6-3 | 232+41 L | 36 x 36 | YELLOW | 1 | | | | | | | | | | | | | | | |
| 91 | R3-7R | 233+74 R | 30 x 30 | WHITE | 1 | | | | | | 1 | 10.5 | | 6.25 | | | 1 | | | SET NEW SIGN AT 234+35 |
| 92 | SPECIAL | 159+90 L | 72 x 48 | BROWN | | | | 1 | | | | | | | | | | | | RESET INCLUDES SIGN AND NEW FOUNDATION. MATCH EXISTING FOUNDATION |
| 93 | SPECIAL | 162+10 R | 48 x 48 | WHITE | | | | 1 | | | | | | | | | | | | RESET INCLUDES SIGN AND NEW FOUNDATION. MATCH EXISTING FOUNDATION |
| 94 | SPECIAL | 174+50 L | 72 x 48 | BROWN | | | | 1 | | | | | | | | | | | | RESET INCLUDES SIGN AND NEW FOUNDATION. MATCH EXISTING FOUNDATION |
| **TOTAL SHEET 4** | | | | | **16** | | | **3** | **1** | | **21** | **170** | **52** | **105** | **52** | | **16** | **5** | | |
| **PROJECT TOTAL** | | | | | **62** | **16** | **1** | **3** | **8** | **2** | **63** | **431.5** | **229.5** | **384.5** | **204** | | **40** | **23** | | |

NOTE: REMOVED SIGNS AND POSTS SHALL REMAIN THE PROPERTY OF AND BE DELIVERED TO COLORADO DEPARTMENT OF TRANSPORTATION REGION 1.

* = FOR INFORMATION ONLY

1. FOR TYPICAL GROUND SIGN PLACEMENT SEE CDOT STANDARD S-614-1.
2. POST LENGTHS ARE APPROXIMATE ONLY. EXACT LENGTHS TO BE FIELD VERIFIED BASED ON FINAL GRADED CONDITIONS OF THE SITE.

# TABULATION OF PAVEMENT MARKINGS

| LOCATION | PAVEMENT MARKING LINES (LINEAR FEET) | | | | | PREFORMED THERMOPLASTIC (SQ FT) | | | |
|---|---|---|---|---|---|---|---|---|---|
| | EDGE | LANE | CENTER | CENTER | CHANNELIZING | XWALK | STOP | WORD | SYMBOL |
| | WHITE SOLID 4 INCH | WHITE BROKEN 4 INCH | YELLOW SOLID 4 INCH | DOUBLE YELLOW SOLID 4 INCH | WHITE SOLID 8 INCH | WHITE SOLID 24 INCH | WHITE SOLID 24 INCH | "ONLY" | PAVEMENT MARKING ARROW |
| | | | | | | | | | |
| **SH 9** | | | | | | | | | |
| STA 131+25.00 TO STA 235+60.00 NORTHBOUND | 11,600 | 12,062 | 10,546 | 1,663 | 4,695 | 340 | 482 | 113 | 171 |
| STA 131+25.00 TO STA 235+60.00 SOUTHBOUND | 12,210 | 12,360 | 10,525 | 1,160 | 5,612 | 460 | 480 | 113 | 155 |
| **PROJECT TOTAL** | | | | | | | | | |
| **TOTAL LENGTH** | **23,810** | **24,422** | **21,071** | **2,823** | **10,307** | | | | |
| **TOTAL SQUARE FEET** | **7,937** | **2,035** | **7,024** | **1,882** | **6,871** | **800** | **962** | **225** | **326** |
| **PAVEMENT MARKING PAINT (GAL)** | | | | | | | | | |
| **EPOXY PAINT (GAL)** | **80** | **21** | **71** | **19** | **69** | | | | |
| **PREFORMED THERMOPLASTIC (WORD-SYMBOL) (SF)** | | | | | | | | **225** | **326** |
| **PREFORMED THERMOPLASTIC (XWALK-STOP LINE) (SF)** | | | | | | **800** | **962** | | |

| SUMMARY OF PAVEMENT MARKING QUANTITIES | | | | |
|---|---|---|---|---|
| COLOR | TEMP PAINT (GAL) | EPOXY (GAL) | PREFORMED THERMOPLASTIC (SF) | |
| | | | XWALK-STOP LINE | WORD-SYMBOL |
| YELLOW | 120 | 90 | | |
| WHITE | 150 | 170 | 1,762 | 551 |
| **TOTALS** | **270** | **260** | **1,762** | **551** |

1. IT IS ESTIMATED THAT 270 GAL OF PAVEMENT MARKING PAINT (LOW VOC SOLVENT BASE) (ITEM 627) WILL BE REQUIRED FOR TEMPORARY PAVEMENT MARKINGS FOR THE PROJECT.
2. IT IS ESTIMATED THAT 13,500 SF OF REMOVAL OF PAVEMENT MARKING (ITEM 202) WILL BE REQUIRED FOR THE PROJECT.

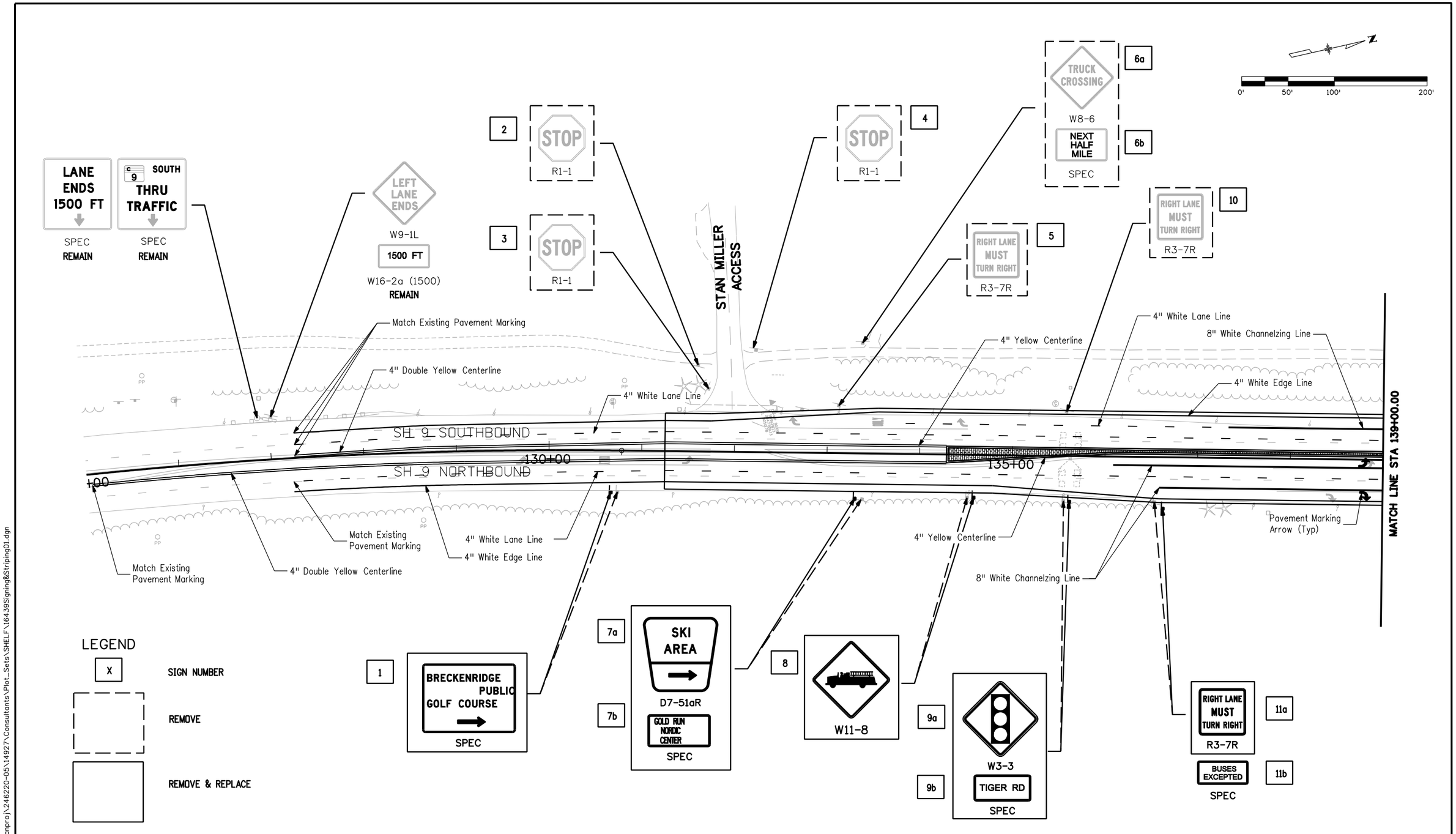


| | | | |
|---|---|---|---|
| Print Date: 1/26/2009 | Sheet Revisions | Colorado Department of Transportation | As Constructed |
| File Name: 16439Signing&Striping01.dgn | Date: / Comments / Init. | Mountain Residency P.O. Box 399 Dumont, CO 80436 Phone: 303-512-5750 FAX: 303-512-5775 | No Revisions: |
| Horiz. Scale: 1:100.023 Vert. Scale: As Noted | | Region 1 DCW | Revised: |
| Unit Information Unit Leader Initials | | | Void: |
| PBSJ 4601 DTC Boulevard, Suite 700 Denver, CO 80237 Phone: (303) 221-7275 Fax: (303) 221-7276 | | | |

SH 9 SIGNING AND PAVEMENT MARKING PLAN STA 125+00 TO STA 139+00

| | | | |
|---|---|---|---|
| Designer: AMS | Structure Numbers | | Project No./Code |
| Detailer: MJ | | | STA 0091-035 |
| Sheet Subset: SIGN&STRIPE | Subset Sheets: 6 of 16 | | 16439 |
| | | | Sheet Number 167 |

21698 9:49:47 AM S:\Tranproj\246220-05\14927\Consultants\Plot_Sets\SHELF\16439Signing&Striping01.dgn

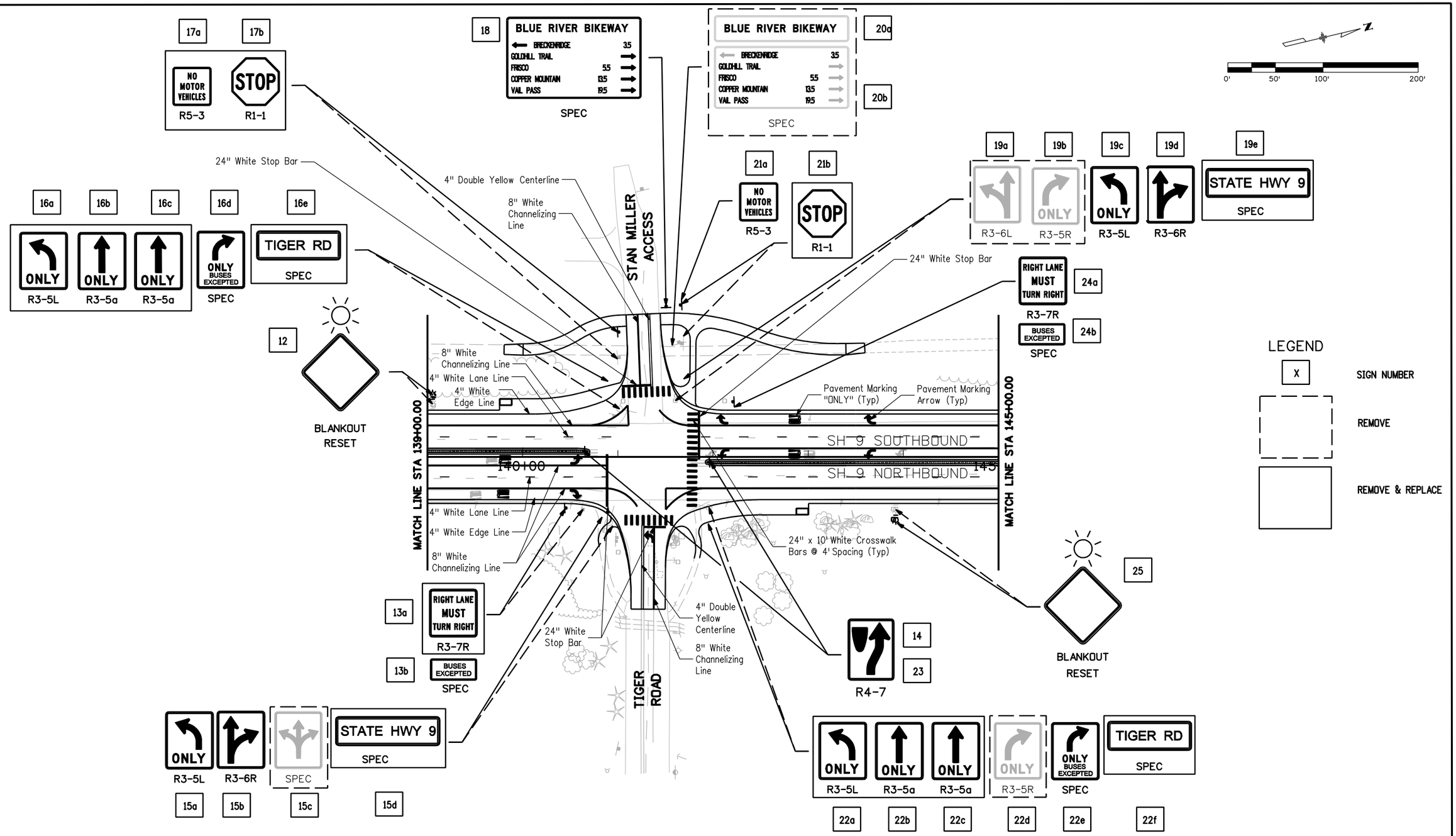


| | | | |
|---|---|---|---|
| Print Date: 1/26/2009 | Sheet Revisions | Colorado Department of Transportation | As Constructed |
| File Name: 16439Signing&Striping02.dgn | Date: / Comments / Init. | Mountain Residency P.O. Box 399 Dumont, CO 80436 Phone: 303-512-5750 FAX: 303-512-5775 | No Revisions: |
| Horiz. Scale: 1:100.07 Vert. Scale: As Noted | | Region 1 DCW | Revised: |
| Unit Information Unit Leader Initials | | | Void: |
| PBSJ 4601 DTC Boulevard, Suite 700 Denver, CO 80237 Phone: (303) 221-7275 Fax: (303) 221-7276 | | | |

SH 9 SIGNING AND PAVEMENT MARKING PLAN STA 139+00 TO 145+00

| | | | |
|---|---|---|---|
| Designer: AMS | Structure Numbers | | Project No./Code |
| Detailer: MJ | | | STA 0091-035 |
| Sheet Subset: SIGN&STRIPE | Subset Sheets: 7 of 16 | | 16439 |
| | | | Sheet Number 168 |

21698 9:50:13 AM S:\Tranproj\246220-05\14927\Consultants\Plot_Sets\SHELF\16439Signing&Striping02.dgn

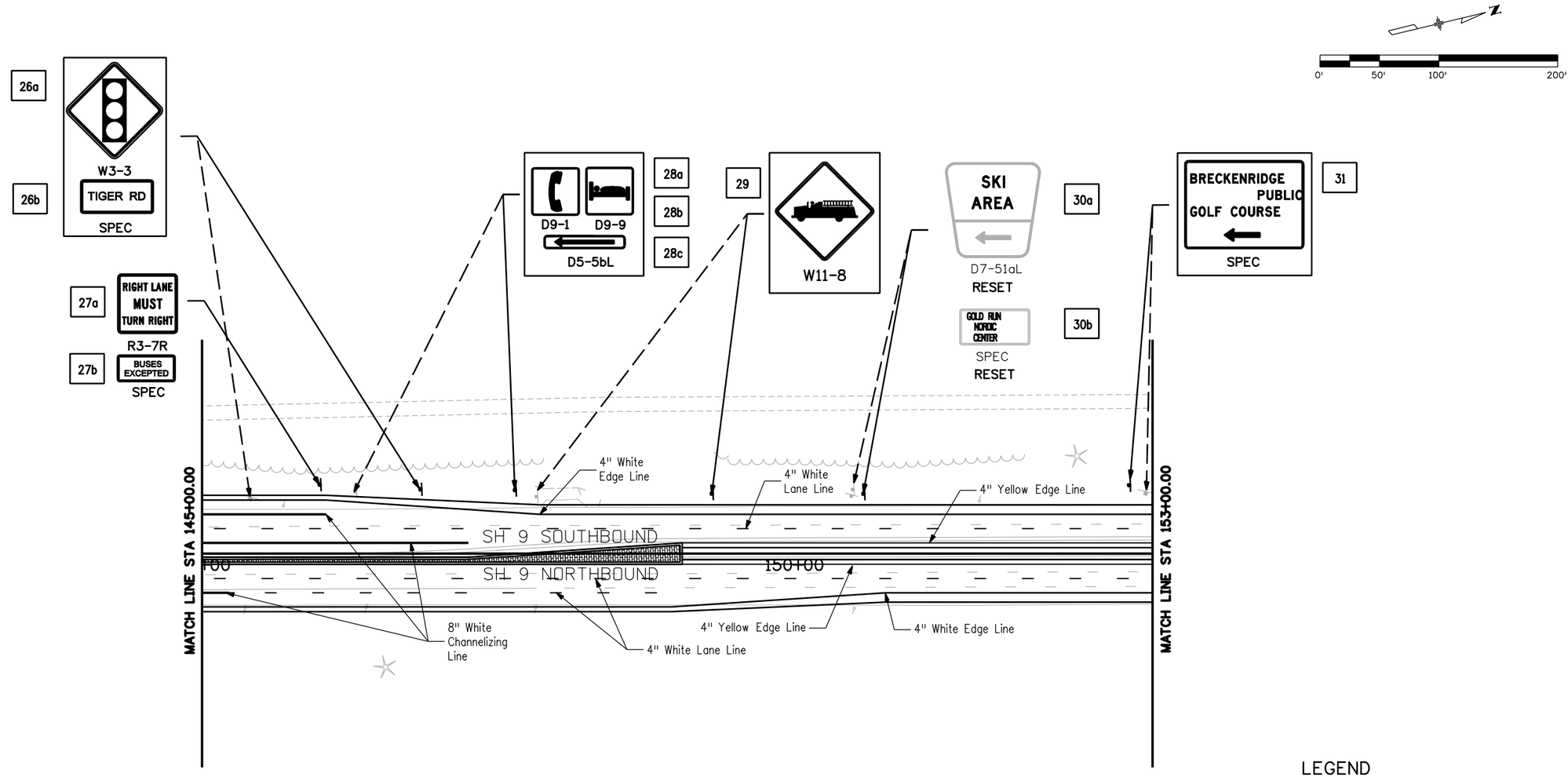


## LEGEND

| | |
|---|---|
| X | SIGN NUMBER |
| | REMOVE |
| | REMOVE & REPLACE |

| | | | | | |
|---|---|---|---|---|---|
| Print Date: 1/26/2009 | Sheet Revisions | | | Colorado Department of Transportation | As Constructed |
| File Name: 16439Signing&Striping03.dgn | Date: | Comments | Init. | Mountain Residency P.O. Box 399<br>Dumont, CO 80436<br>Phone: 303-512-5750 FAX: 303-512-5775 | No Revisions: |
| Horiz. Scale: 1:100.07 Vert. Scale: As Noted | | | | Region 1 DCW | Revised: |
| Unit Information Unit Leader Initials | | | | | Void: |
| PBSJ 4601 DTC Boulevard, Suite 700<br>Denver, CO 80237<br>Phone: (303) 221-7275 Fax: (303) 221-7276 | | | | | |

| | | | |
|---|---|---|---|
| SH 9 SIGNING AND PAVEMENT MARKING PLAN STA 145+00 TO 153+00 | | | Project No./Code |
| Designer: AMS | Structure Numbers | | STA 0091-035 |
| Detailer: MJ | | | 16439 |
| Sheet Subset: SIGN&STRIPE | Subset Sheets: 8 of 16 | | Sheet Number 169 |

21698 9:50:36 AM S:\Tranproj\246220-05\14927\Consultants\Plot_Sets\SHELF\16439Signing&Striping03.dgn

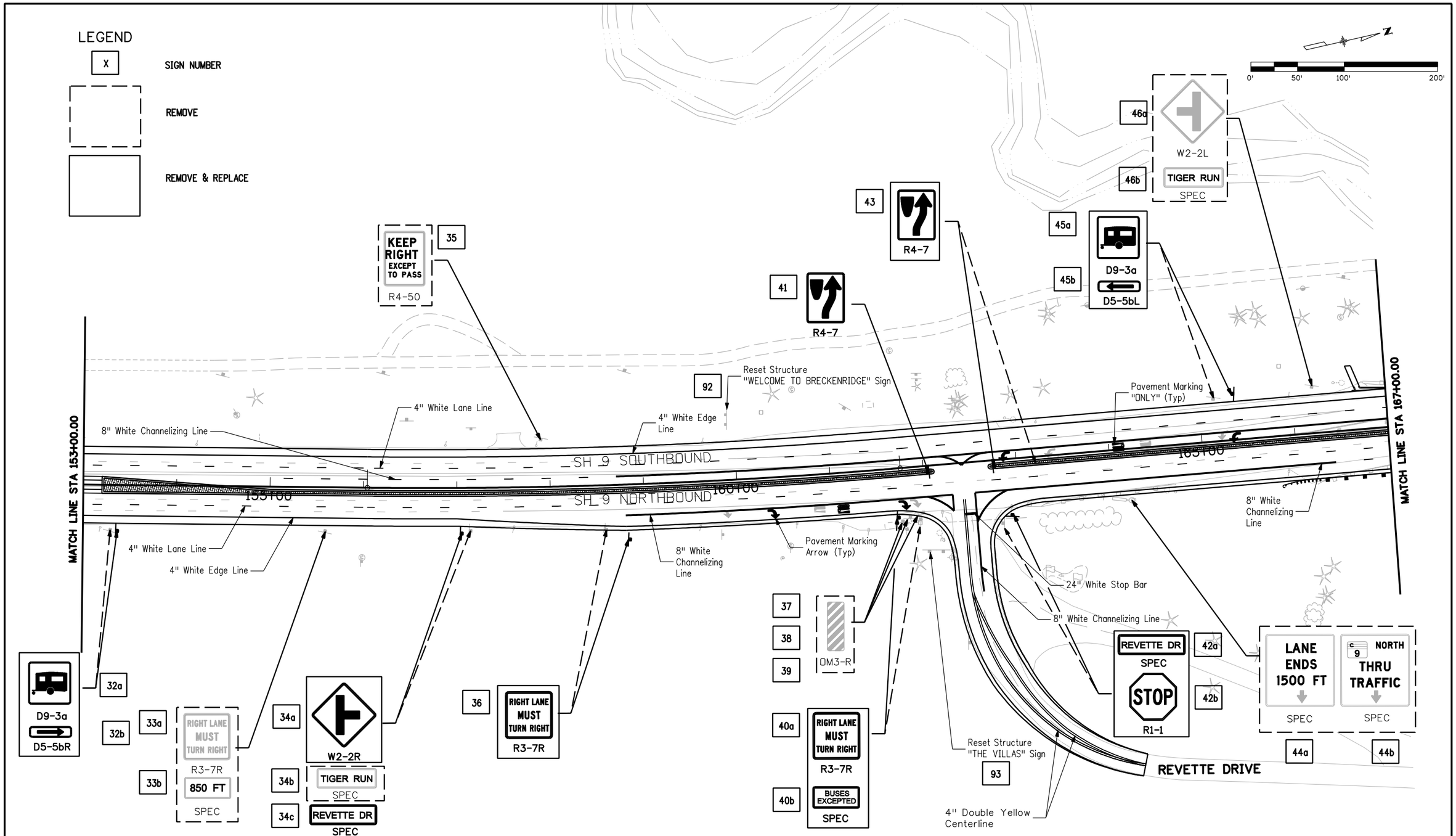


21698 9:50:58 AM S:\Tranproj\246220-05\14927\Consultants\Plot_Sets\SHELF\16439Signing&Striping04.dgn

| | | | |
|---|---|---|---|
| Print Date: 1/26/2009 | Sheet Revisions | Colorado Department of Transportation | As Constructed |
| File Name: 16439Signing&Striping04.dgn | Date: / Comments / Init. | Mountain Residency P.O. Box 399<br>Dumont, CO 80436<br>Phone: 303-512-5750 FAX: 303-512-5775 | No Revisions: |
| Horiz. Scale: 1:100 Vert. Scale: As Noted | | Region 1 DCW | Revised: |
| Unit Information Unit Leader Initials | | | Void: |
| PBSJ 4601 DTC Boulevard, Suite 700<br>Denver, CO 80237<br>Phone: (303) 221-7275 Fax: (303) 221-7276 | | | |

| | | | |
|---|---|---|---|
| SH 9 SIGNING AND PAVEMENT MARKING PLAN STA 153+00 TO STA 167+00 | | | Project No./Code |
| Designer: AMS | Structure Numbers | | STA 0091-035 |
| Detailer: MJ | | | 16439 |
| Sheet Subset: SIGN&STRIPE | Subset Sheets: 9 of 16 | | Sheet Number 170 |

LEGEND

X — SIGN NUMBER

REMOVE

REMOVE & REPLACE

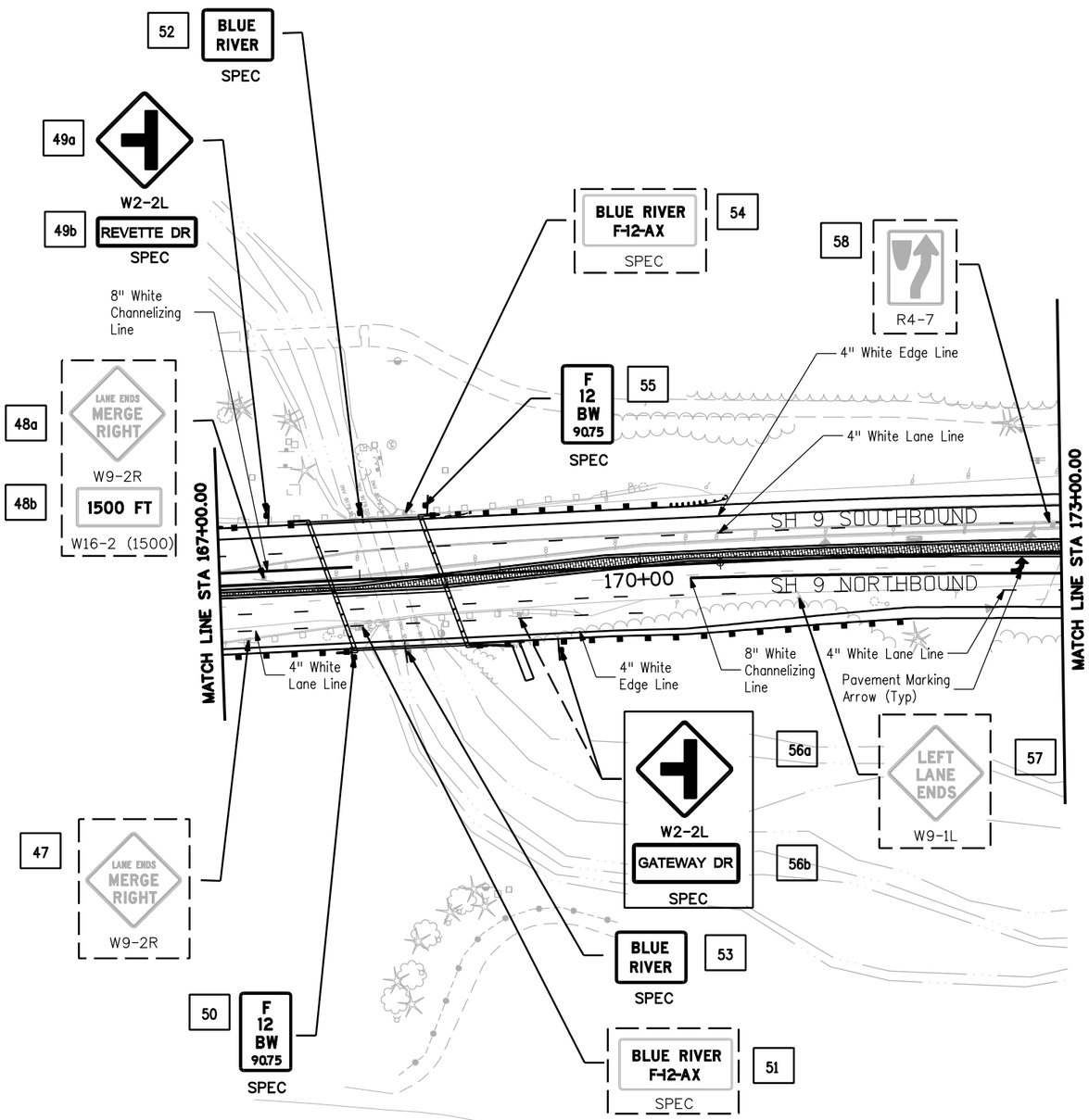


0' 50' 100' 200'

| | | | |
|---|---|---|---|
| Print Date: 1/26/2009 | Sheet Revisions | Colorado Department of Transportation | As Constructed |
| File Name: 16439Signing&Striping05.dgn | Date: / Comments / Init. | Mountain Residency P.O. Box 399 Dumont, CO 80436 Phone: 303-512-5750 FAX: 303-512-5775 | No Revisions: |
| Horiz. Scale: 1:100.046 Vert. Scale: As Noted | | Region 1 DCW | Revised: |
| Unit Information Unit Leader Initials | | | Void: |
| PBSJ 4601 DTC Boulevard, Suite 700 Denver, CO 80237 Phone: (303) 221-7275 Fax: (303) 221-7276 | | | |

SH 9 SIGNING AND PAVEMENT MARKING PLAN STA 167+00 TO STA 173+00

Designer: AMS
Detailer: MJ
Structure Numbers
Sheet Subset: SIGN&STRIPE
Subset Sheets: 10 of 16

Project No./Code
STA 0091-035
16439
Sheet Number 171

21698 9:51:23 AM S:\Tranproj\246220-05\14927\Consultants\Plot_Sets\SHELF\16439Signing&Striping05.dgn

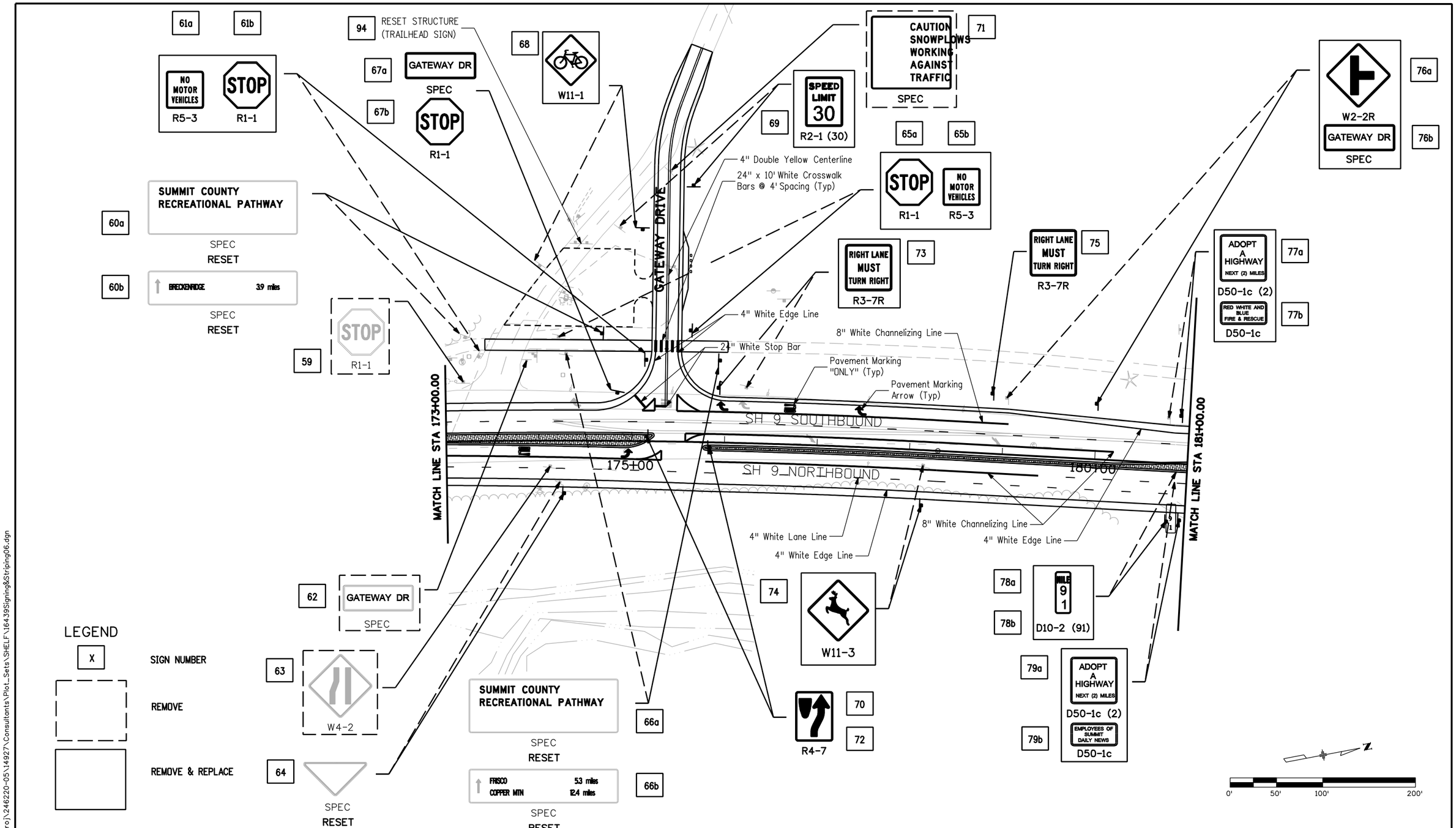


| | | | |
|---|---|---|---|
| Print Date: 1/26/2009 | Sheet Revisions | Colorado Department of Transportation | As Constructed |
| File Name: 16439Signing&Striping06.dgn | Date: / Comments / Init. | Mountain Residency P.O. Box 399<br>Dumont, CO 80436<br>Phone: 303-512-5750 FAX: 303-512-5775 | No Revisions: |
| Horiz. Scale: 1:100.046 Vert. Scale: As Noted | | Region 1 DCW | Revised: |
| Unit Information Unit Leader Initials | | | Void: |
| PBSJ 4601 DTC Boulevard, Suite 700<br>Denver, CO 80237<br>Phone: (303) 221-7275 Fax: (303) 221-7276 | | | |

| | | | |
|---|---|---|---|
| SH 9 SIGNING AND PAVEMENT MARKING PLAN STA 173+00 TO STA 181+00 | | | Project No./Code |
| Designer: AMS | Structure Numbers | | STA 0091-035 |
| Detailer: MJ | | | 16439 |
| Sheet Subset: SIGN&STRIPE | Subset Sheets: | 11 of 16 | Sheet Number 172 |

21698 9:51:51 AM S:\Tranpro\246220-05\14927\Consultants\Plot_Sets\SHELF\16439Signing&Striping06.dgn

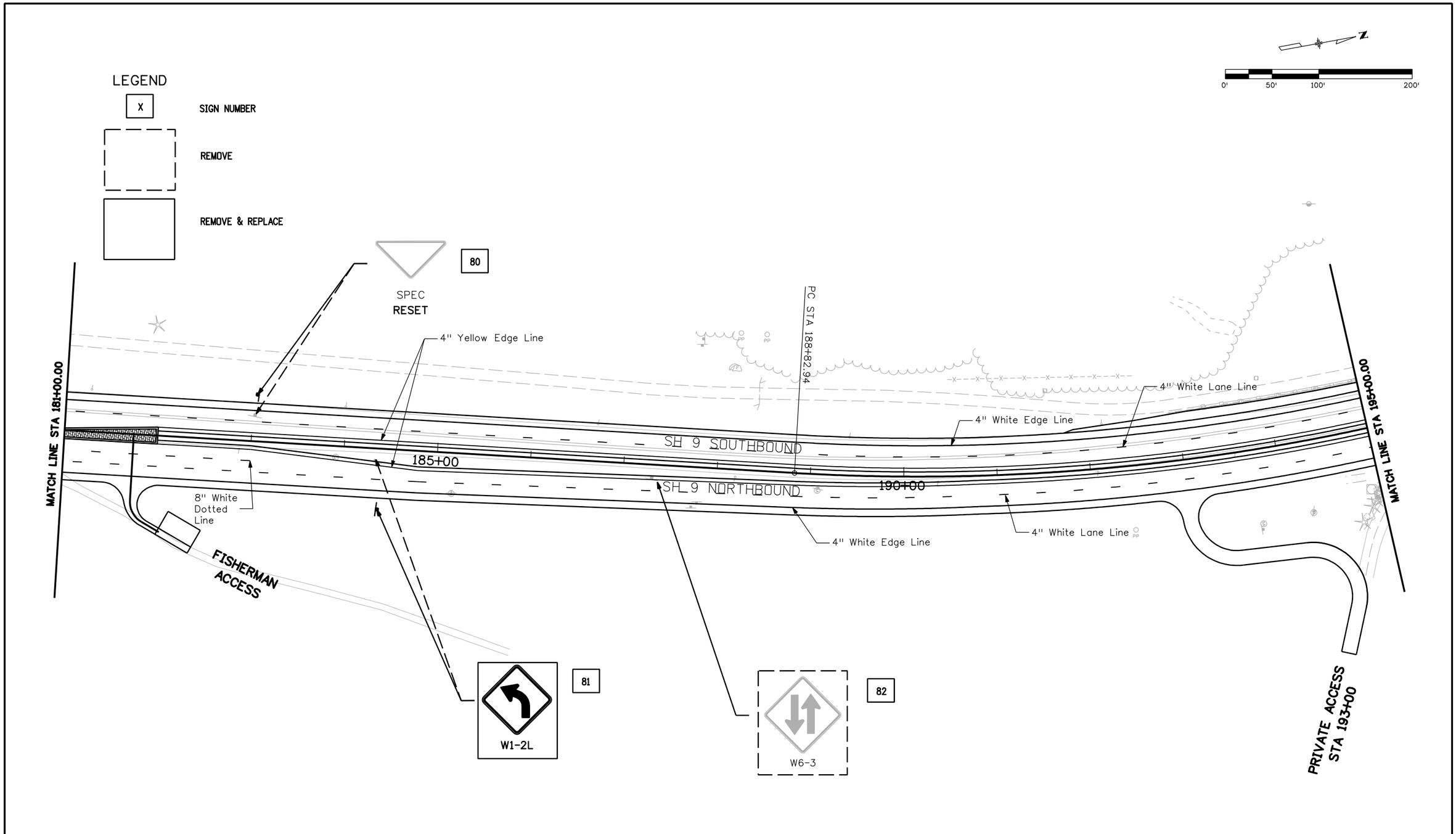


| | | | |
|---|---|---|---|
| Print Date: 1/26/2009 | Sheet Revisions | Colorado Department of Transportation | As Constructed |
| File Name: 16439Signing&Striping07.dgn | Date: / Comments / Init. | Mountain Residency P.O. Box 399<br>Dumont, CO 80436<br>Phone: 303-512-5750 FAX: 303-512-5775 | No Revisions: |
| Horiz. Scale: 1:100 Vert. Scale: As Noted | | Region 1 DCW | Revised: |
| Unit Information Unit Leader Initials | | | Void: |
| PBSJ 4601 DTC Boulevard, Suite 700<br>Denver, CO 80237<br>Phone: (303) 221-7275 Fax: (303) 221-7276 | | | |

| | | |
|---|---|---|
| SH 9 SIGNING AND PAVEMENT MARKING PLAN STA 181+00 TO STA 195+00 | | Project No./Code |
| Designer: AMS | Structure Numbers | STA 0091-035 |
| Detailer: MJ | | 16439 |
| Sheet Subset: SIGN&STRIPE | Subset Sheets: 12 of 16 | Sheet Number 173 |

21698 9:52:19 AM S:\Tranproj\246220-05\14927\Consultants\Plot_Sets\SHELF\16439Signing&Striping07.dgn

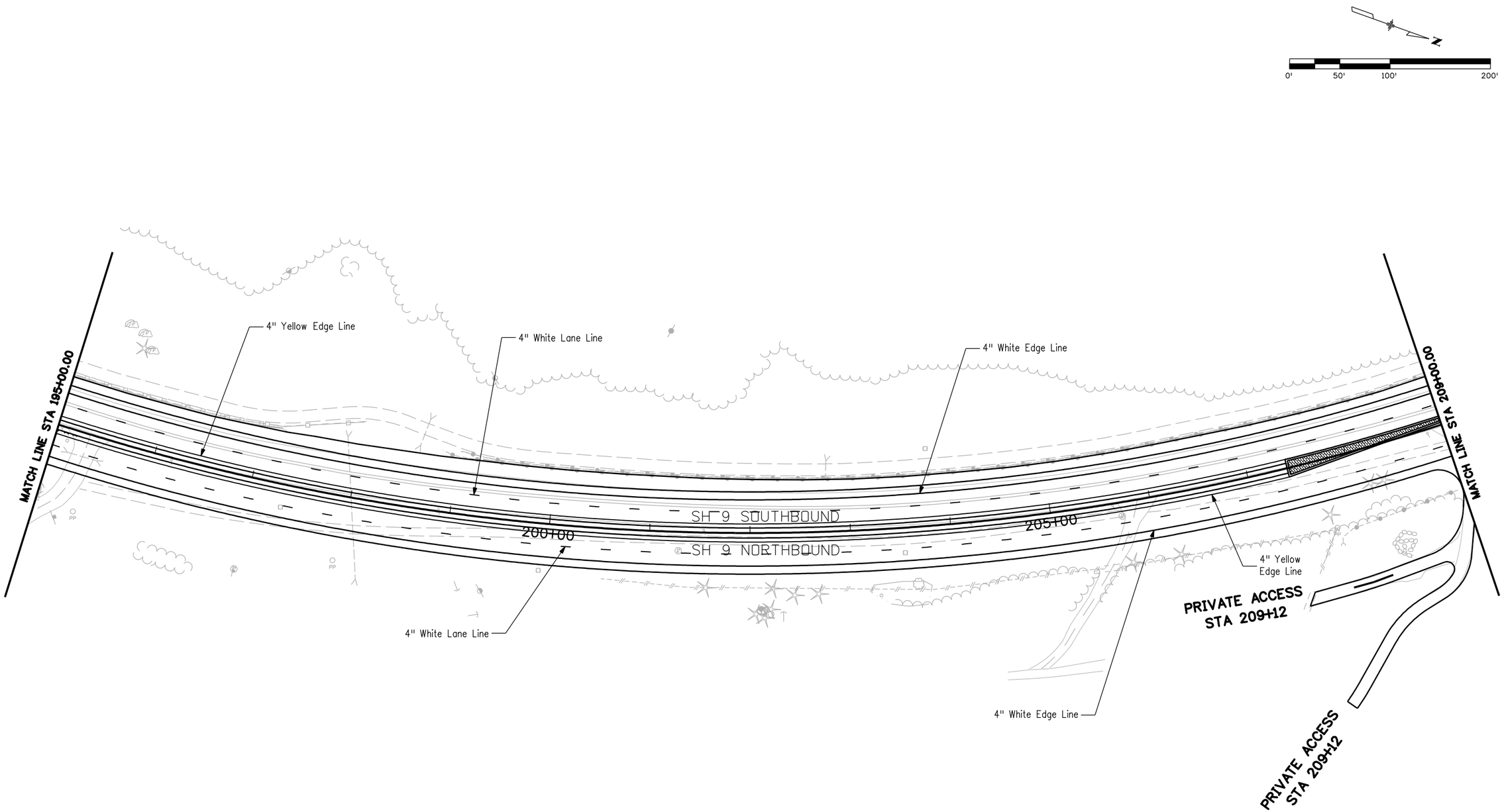


| | | | |
|---|---|---|---|
| Print Date: 1/26/2009 | Sheet Revisions | Colorado Department of Transportation | As Constructed |
| File Name: 16439Signing&Striping08.dgn | Date: / Comments / Init. | CDOT DEPARTMENT OF TRANSPORTATION | No Revisions: |
| Horiz. Scale: 1:100 Vert. Scale: As Noted | | Mountain Residency P.O. Box 399<br>Dumont, CO 80436<br>Phone: 303-512-5750 FAX: 303-512-5775 | Revised: |
| Unit Information Unit Leader Initials | | Region 1 DCW | Void: |
| PBSJ 4601 DTC Boulevard, Suite 700<br>Denver, CO 80237<br>Phone: (303) 221-7275 Fax: (303) 221-7276 | | | |

| | | | |
|---|---|---|---|
| SH 9 STRIPING AND PAVEMENT MARKING PLAN STA 195+00 TO STA 209+00 | | | Project No./Code |
| Designer: AMS | Structure Numbers | | STA 0091-035 |
| Detailer: MJ | | | 16439 |
| Sheet Subset: SIGN&STRIPE | Subset Sheets: 13 of 16 | | Sheet Number 174 |

21698 9:52:43 AM S:\Tranproj\246220-05\14927\Consultants\Plot_Sets\SHELF\16439Signing&Striping08.dgn

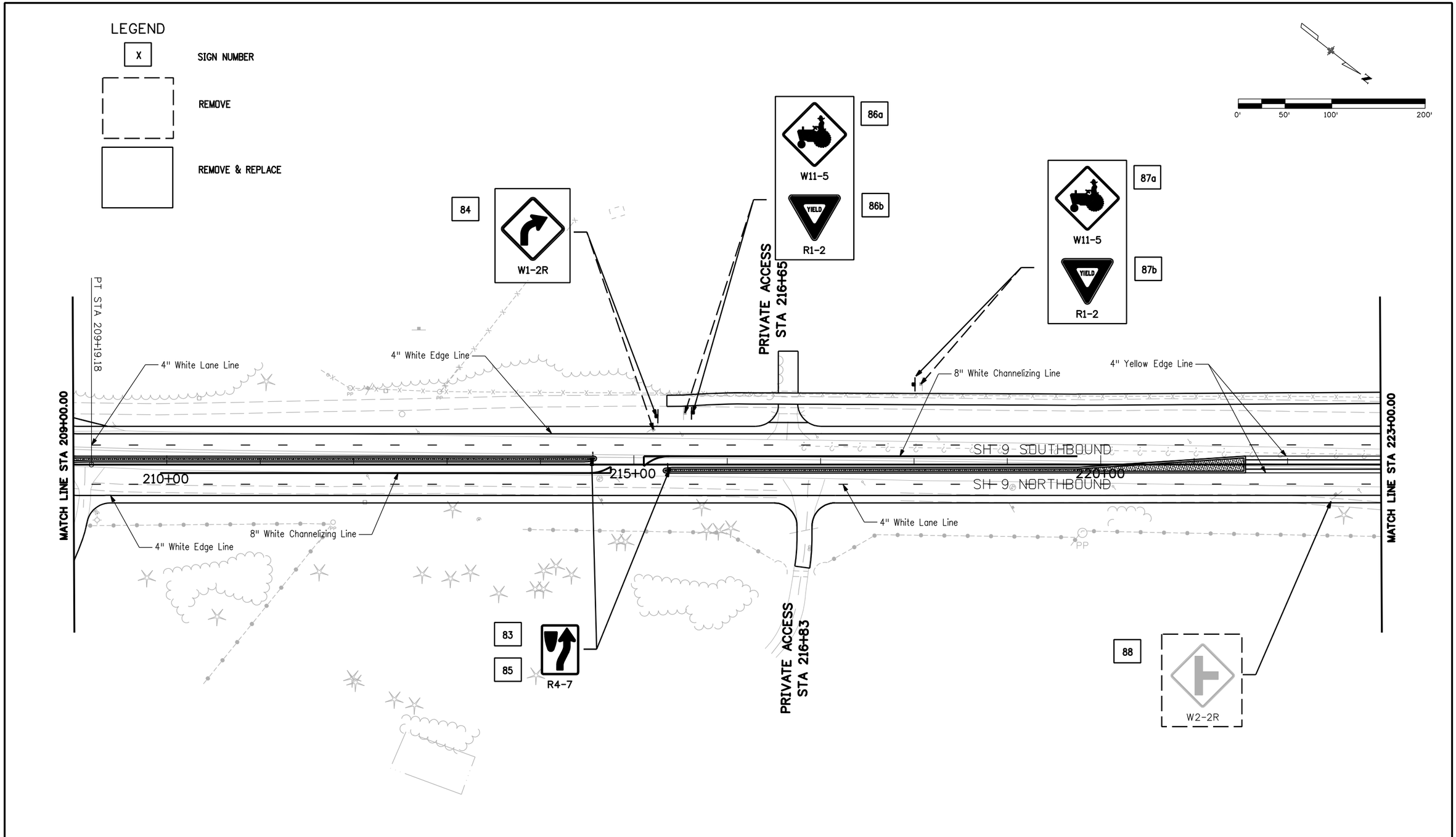


| | | | |
|---|---|---|---|
| Print Date: 1/26/2009 | | | |
| File Name: 16439Signing&Striping09.dgn | | | |
| Horiz. Scale: 1:100 | Vert. Scale: As Noted | | |
| Unit Information | Unit Leader Initials | | |

PBSJ 4601 DTC Boulevard, Suite 700
Denver, CO 80237
Phone: (303) 221-7275 Fax: (303) 221-7276

| Sheet Revisions | | |
|---|---|---|
| Date: | Comments | Init. |
| | | |
| | | |
| | | |
| | | |

Colorado Department of Transportation
DOT
Mountain Residency P.O. Box 399
Dumont, CO 80436
Phone: 303-512-5750 FAX: 303-512-5775
Region 1 DCW

| As Constructed | | | |
|---|---|---|---|
| No Revisions: | | | |
| Revised: | | | |
| Void: | | | |

SH 9 STRIPING AND PAVEMENT MARKING PLAN
STA 209+00 TO STA 223+00

| | | | |
|---|---|---|---|
| Designer: | AMS | Structure Numbers | |
| Detailer: | MJ | | |
| Sheet Subset: SIGN&STRIPE | | Subset Sheets: | 14 of 16 |

| Project No./Code |
|---|
| STA 0091-035 |
| 16439 |
| Sheet Number 175 |

21698 9:53:03 AM S:\Tranpro\246220-05\14927\Consultants\Plot_Sets\SHELF\16439Signing&Striping09.dgn

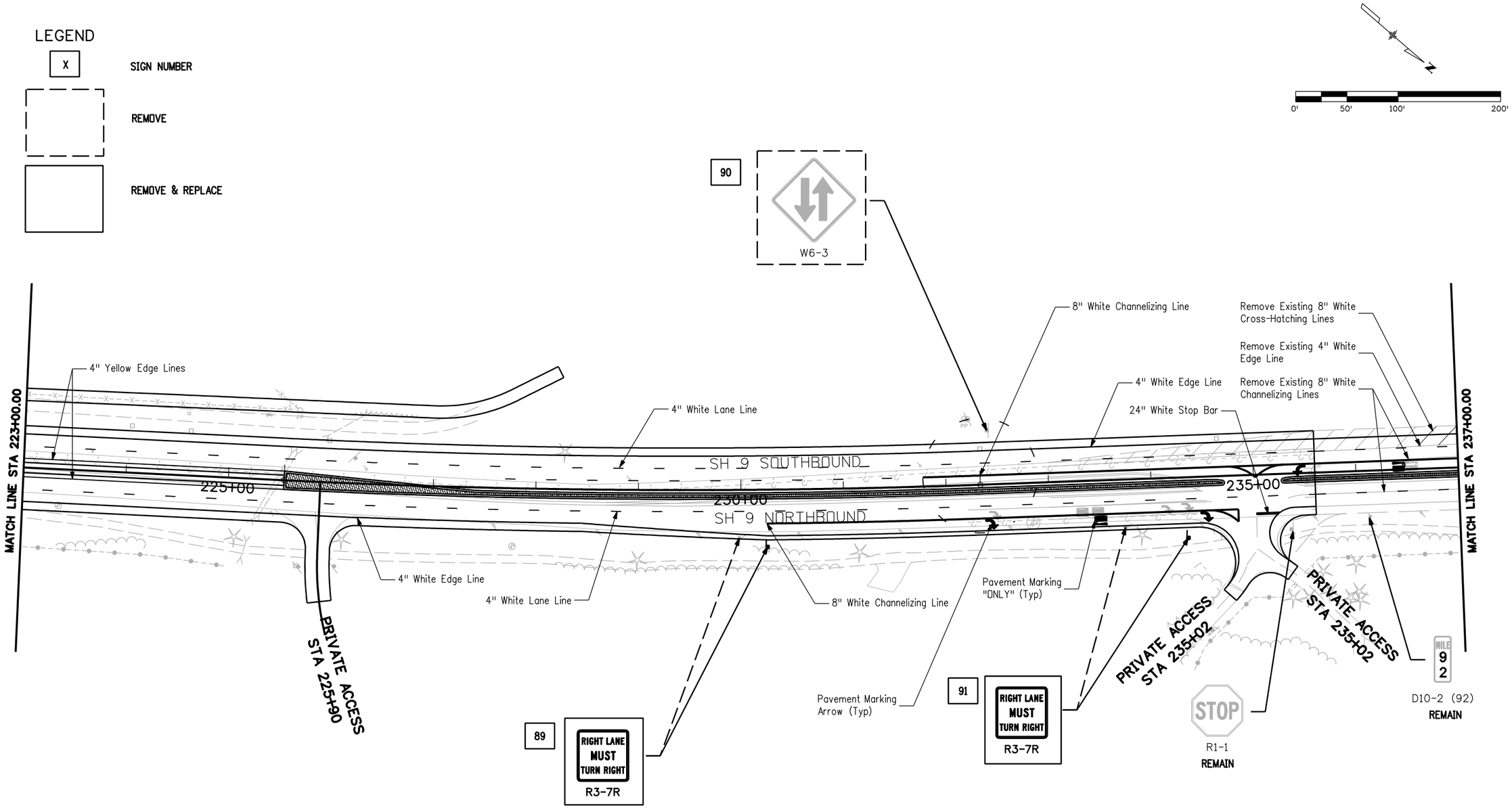


| | | | |
|---|---|---|---|
| Print Date: 1/26/2009 | Sheet Revisions | Colorado Department of Transportation | As Constructed |
| File Name: 16439Signing&Striping10.dgn | Date: / Comments / Init. | Mountain Residency P.O. Box 399<br>Dumont, CO 80436<br>Phone: 303-512-5750 FAX: 303-512-5775 | No Revisions: |
| Horiz. Scale: 1:100 Vert. Scale: As Noted | | Region 1 DCW | Revised: |
| Unit Information Unit Leader Initials | | | Void: |
| PBSJ 4601 DTC Boulevard, Suite 700<br>Denver, CO 80237<br>Phone: (303) 221-7275 Fax: (303) 221-7276 | | | |

SH 9 SIGNING AND PAVEMENT MARKING PLAN
STA 223+00 TO STA 237+00

| | | | |
|---|---|---|---|
| Designer: AMS | Structure Numbers | | Project No./Code |
| Detailer: MJ | | | STA 0091-035 |
| Sheet Subset: SIGN&STRIPE | Subset Sheets: 15 of 16 | | 16439 |
| | | | Sheet Number 176 |

21698 9:53:50 AM S:\Tranproj\246220-05\14927\Consultants\Plot_Sets\SHELF\16439Signing&Striping10.dgn

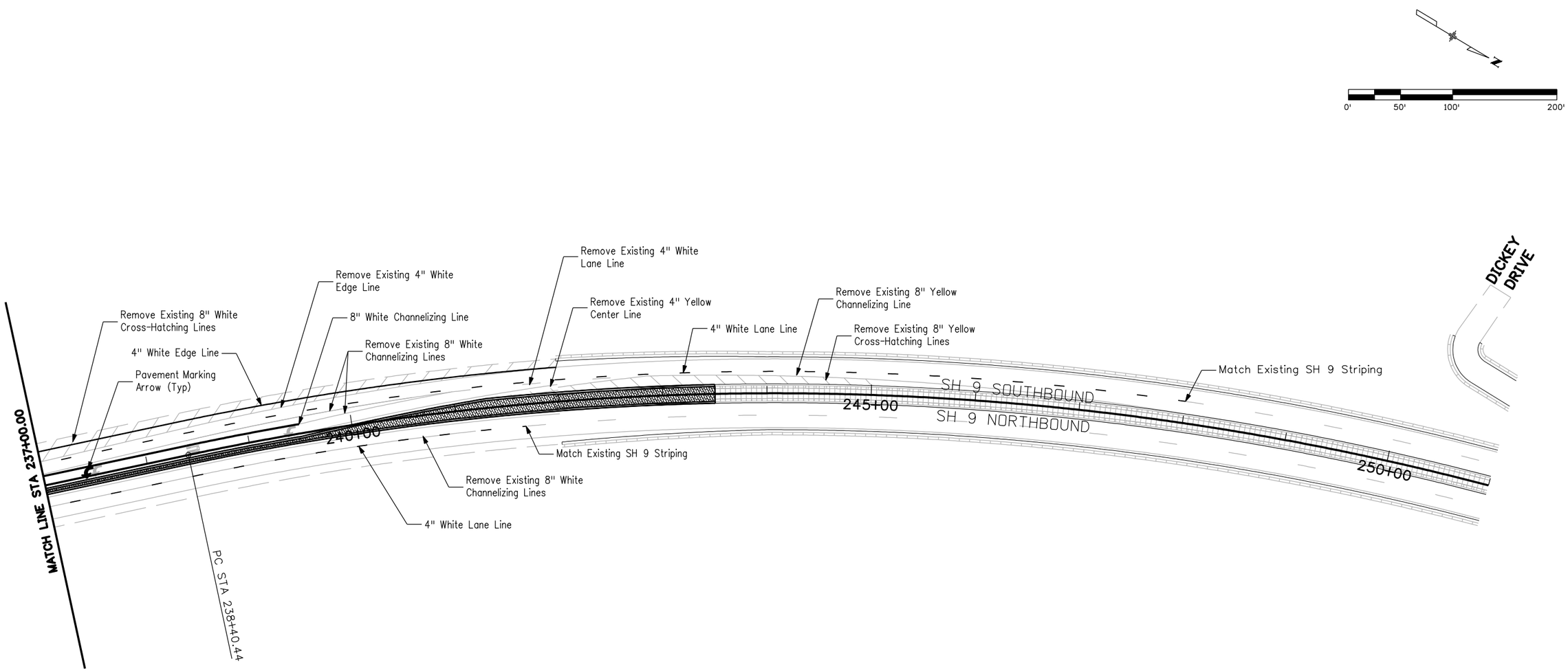


| | | | |
|---|---|---|---|
| Print Date: 1/26/2009 | | | |
| File Name: 16439Signing&Striping11.dgn | | | |
| Horiz. Scale: 1:100 | Vert. Scale: As Noted | | |
| Unit Information | Unit Leader Initials | | |

PBSJ 4601 DTC Boulevard, Suite 700
Denver, CO 80237
Phone: (303) 221-7275 Fax: (303) 221-7276

| Sheet Revisions | | |
|---|---|---|
| Date: | Comments | Init. |
| | | |
| | | |
| | | |
| | | |

Colorado Department of Transportation
DOT DEPARTMENT OF TRANSPORTATION
Mountain Residency P.O. Box 399
Dumont, CO 80436
Phone: 303-512-5750 FAX: 303-512-5775
Region 1 DCW

As Constructed
No Revisions:
Revised:
Void:

SH 9 SIGNING AND PAVEMENT MARKING PLAN
STA 237+00 TO STA 251+00

| | | | |
|---|---|---|---|
| Designer: | AMS | Structure Numbers | |
| Detailer: | MJ | | |
| Sheet Subset: SIGN&STRIPE | | Subset Sheets: | 16 of 16 |

Project No./Code
STA 0091-035
16439
Sheet Number 177

21698 9:54:13 AM S:\Tranproj\246220-05\14927\Consultants\Plot_Sets\SHELF\16439Signing&Striping11.dgn

# SH 9 CONSTRUCTION PHASING

POTENTIAL CONSTRUCTION PHASING SEQUENCE

THE CONSTRUCTION SEQUENCE DESCRIBED BELOW AND SHOWN ON THE PLANS IS A POTENTIAL SEQUENCE AVAILABLE FOR CONTRACTOR USE. IT IS A GENERAL CONCEPT ONLY AND IS PROVIDED FOR INFORMATION ONLY. NOT ALL CONSTRUCTION DETAILS HAVE BEEN ADDRESSED. THE CONTRACTOR SHALL SUBMIT A CONSTRUCTION PHASING AND TRAFFIC CONTROL PLAN TO THE ENGINEER FOR REVIEW AND COMMENT.

PHASE 1

SOUTH OF BRIDGE:
DESCRIPTION:
CONSTRUCT CURB AND GUTTER AND DEPRESSED MEDIANS.
NORTH OF BRIDGE:
DESCRIPTION:
CONSTRUCT THE EAST SIDE OF SH9 IMPROVEMENTS.

PHASE 1 SPECIFIC NOTES:
- LEFT TURN LANES SHALL BE PROVIDED AT TIGER RD, GATEWAY DR, AND REVETTE DR.
- RIGHT TURN LANES ARE NOT REQUIRED TO BE PROVIDED; HOWEVER, SHOULD ENOUGH SPACE BE AVAILABLE, PROVIDE RIGHT TURN LANES.
- SHARED USE PATH SHALL REMAIN OPEN AT ALL TIMES.

TRAFFIC:
SEE CONSTRUCTION PHASING TYPICAL SECTIONS.

PHASE 2

SOUTH OF BRIDGE:
DESCRIPTION:
CONSTRUCT SH9 IMPROVEMENTS LEFT AND RIGHT OUTSIDE AREAS.
NORTH OF BRIDGE:
DESCRIPTION:
CONSTRUCT THE WEST SIDE OF SH9 IMPROVEMENTS.

PHASE 2 SPECIFIC NOTES:
- LEFT TURN LANES SHALL BE PROVIDED AT TIGER RD, GATEWAY DR, AND REVETTE DR.
- RIGHT TURN LANES ARE NOT REQUIRED TO BE PROVIDED; HOWEVER, SHOULD ENOUGH SPACE BE AVAILABLE, PROVIDE RIGHT TURN LANES.
- SHARED USE PATH SHALL REMAIN OPEN AT ALL TIMES.

TRAFFIC:
SEE CONSTRUCTION PHASING TYPICAL SECTIONS.

PHASE 3

SOUTH OF BRIDGE:
DESCRIPTION:
CONSTRUCT OVERLAY.

CONSTRUCTION PHASING GENERAL NOTES:

SH 9 SHALL BE OPEN TO TRAFFIC DURING ALL HOURS. MAINTAIN A MINIMUM OF ONE-LANE OF TRAFFIC IN EACH DIRECTION.

ALL TRAVEL LANES SHALL BE 12-FEET WIDE AT ALL TIMES. MINIMUM SHOULDER WIDTH SHALL BE 4-FEET. AN 8-FOOT WIDE SHOULDER IS PREFERRED IF CONSTRUCTION LIMITS PERMIT. SHOULDER REQUIREMENT NOT REQUIRED WHEN TRAFFIC NEXT TO CURB AND GUTTER SECTIONS.

ALL ACCESSES SHALL REMAIN OPEN AT ALL TIMES.

NO NIGHT WORK SHALL BE PERMITTED UNLESS PREVIOUSLY APPROVED BY THE ENGINEER. ANY NIGHT WORK SHALL BE COORDINATED WITH THE ENGINEER AT LEAST ONE-WEEK PRIOR TO THE WORK TO ALLOW NOTIFICATION OF IMMEDIATE AREA RESIDENTS.

SEE PROJECT SPECIAL PROVISIONS FOR ADDITIONAL REQUIREMENTS.

TRAFFIC CONTROL GENERAL NOTES:

SH 9 SHALL MAINTAIN CONSTRUCTION WORK ZONE SPEED LIMIT OF 35 MPH.

ALL TAPERS, DETOURS, ETC., SHALL BE SET USING 35 MPH.

"BEGIN FINES DOUBLED" SIGNS SHALL BE POSTED ON SH9 AND ALL ADJOINING SIDE ROADS FOR THE DURATION OF THE PROJECT.

"END FINES DOUBLED" SIGNS SHALL BE POSTED ON SH9 AND ALL ADJOINING SIDE ROADS FOR THE DURATION OF THE PROJECT.

"XYZ CONSTRUCTION THANKS YOU" SIGNS SHALL BE POSTED ON SH9 AND ALL ADJOINING SIDE ROADS FOR THE DURATION OF THE PROJECT.

CONTRACTOR SHALL SUBMIT AN INTERIM TRAFFIC SIGNAL LAYOUT PLAN TO THE ENGINEER FOR REVIEW AND COMMENT PRIOR TO INSTALLATION. THE INTERIM TRAFFIC SIGNAL LAYOUTS WILL NOT BE PAID FOR SEPARATELY BUT SHALL BE INCLUDED IN THE COST OF THE WORK.

BASED ON SIGHT DISTANCE AND OTHER CONSIDERATIONS, THE FINAL LOCATION OF ALL SIGNS ARE SUBJECT TO APPROVAL OF THE ENGINEER.

## SCHEDULE OF CONSTRUCTION TRAFFIC CONTROL DEVICES

| SIGNS | | | | | | OTHER DEVICES | |
|---|---|---|---|---|---|---|---|
| SIGN CODE | LEGEND | DIMENSIONS (INCHES) | PANEL SIZE A | PANEL SIZE B | PANEL SIZE C | ITEM | QUANTITY |
| | | | EACH | | | | |
| G20-10 | "XYZ CONST THANKS YOU" | 48 x 48 | | 6 | | DETOUR PAVEMENT | 595 SY |
| G20-11 | PUBLIC INFORMATION | 48 x 48 | | 6 | | FLAGGING | 5,000 HR |
| R2-1 (40) | SPEED LIMIT | 24 x 30 | 8 | | | TRAFFIC CONTROL INSPECTION | 100 DAYS |
| R2-1 (50) | SPEED LIMIT | 24 x 30 | 2 | | | TRAFFIC CONTROL MANAGEMENT | 170 DAYS |
| R4-1 | "DO NOT PASS" | 24 x 30 | 6 | | | PORTABLE MESSAGE SIGN PANEL | 2 EA |
| R4-7 | KEEP RIGHT (SYMBOL) | 24 x 30 | 2 | | | FLASH ARROW PANEL (TYPE A) | 2 EA |
| R5-1A | "WRONG WAY" | 36 x 24 | 2 | | | DRUM CHANNEL DEVICE | 500 EA |
| R11-2 | "ROAD CLOSED" | 48 x 30 | | 2 | | DRUM CHANNEL DEVICE (LIGHT)(F) | 50 EA |
| R52-6a | "BEGIN FINES DOUBLE IN WORK ZONE" | 48 x 60 | | | 6 | CONC BARRIER (TEMP) | 1,000 LF |
| R52-6b | "END FINES DOUBLE IN WORK ZONE" | 48 x 60 | | | 6 | TRAFFIC CONE | 300 EA |
| SPEC | "PATH WORK AHEAD" | 30 x 30 | 4 | | | IMPACT ATTEN (SAND FILL) (TEMP) | 2 EA |
| W1-4L | S-CURVE LEFT (SYMBOL) | 48 x 48 | | 1 | | FLASHING BEACON | 2 EA |
| W1-4R | S-CURVE RIGHT (SYMBOL) | 48 x 48 | | 1 | | BARRICADE (TYPE 3 M-A) | 4 EA |
| W1-8 | CHEVRONS | 18 x 24 | 6 | | | | |
| W4-2L | LEFT LANE ENDS (SYMBOL) | 48 x 48 | | 6 | | | |
| W4-2R | RIGHT LANE ENDS (SYMBOL) | 48 x 48 | | 6 | | | |
| W6-3 | TWO-WAY TRAFFIC (SYMBOL) | 48 x 48 | | 6 | | | |
| W8-1 | "BUMP" | 48 x 48 | | 4 | | | |
| W8-11 | "UNEVEN LANES" | 48 x 48 | | 2 | | | |
| W8-9a | "SHOULDER DROP OFF" | 48 x 48 | | 6 | | | |
| W20-1 | "ROAD WORK 1 MILE" | 48 x 48 | | 6 | | | |
| W20-1 | "ROAD WORK AHEAD" | 48 x 48 | | 10 | | | |
| W20-5L | "LEFT LANE CLOSED 1500 FT / 1/2 MI" | 48 x 48 | | 12 | | | |
| W20-5R | "RIGHT LANE CLOSED 1500 FT / 1/2 MI" | 48 x 48 | | 12 | | | |
| W20-7A | FLAGGER (SYMBOL) | 48 x 48 | | 10 | | | |
| W21-5aL | "LEFT SHOULDER CLOSED" | 48 x 48 | | 6 | | | |
| W21-5aR | "RIGHT SHOULDER CLOSED" | 48 x 48 | | 6 | | | |
| | | PROJECT TOTAL | 30 | 108 | 12 | | |

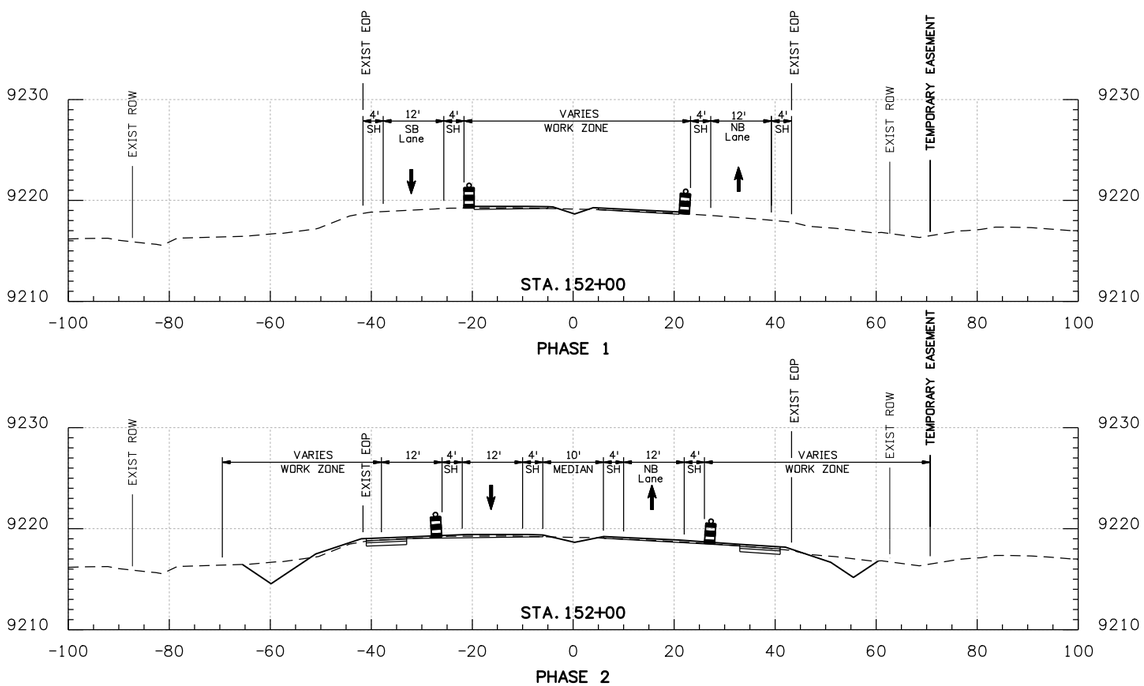


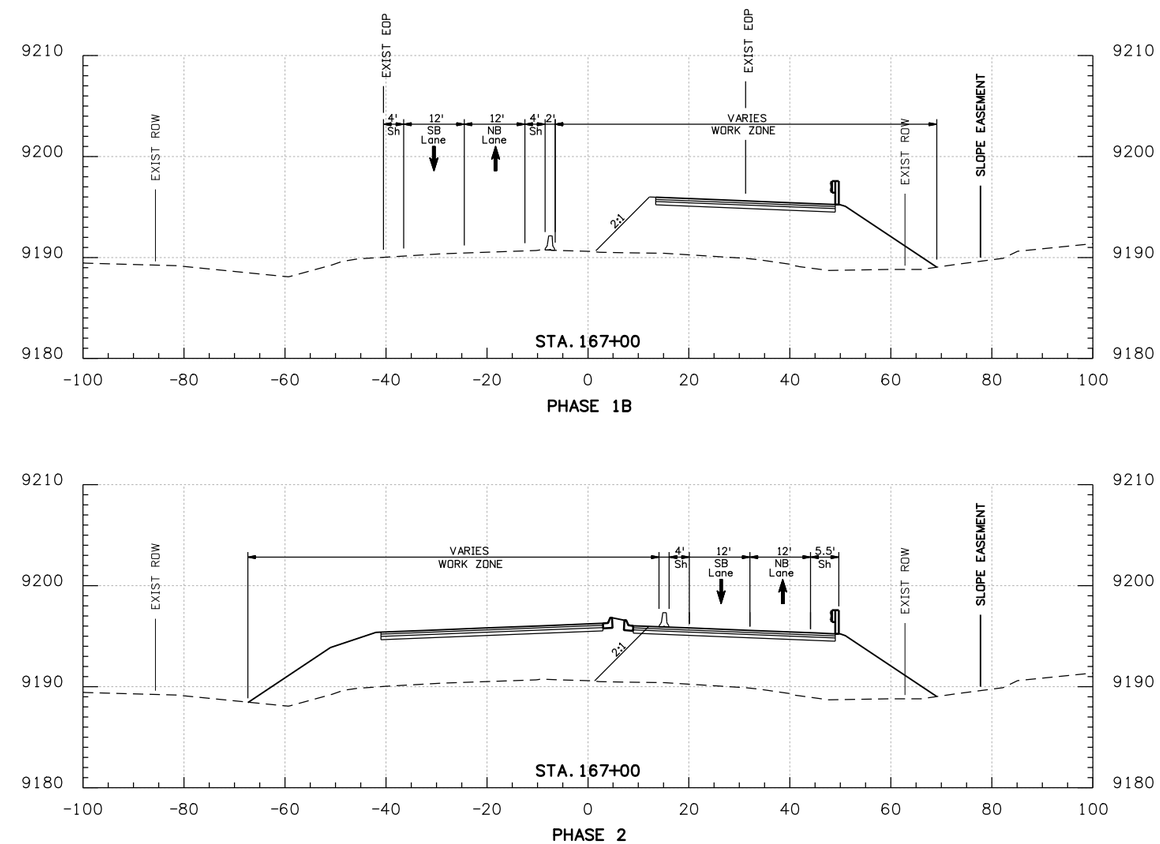


| | | | |
|---|---|---|---|
| Print Date: 1/26/2009 | Sheet Revisions | Colorado Department of Transportation | As Constructed |
| File Name: 16439PhasingTYP01.dgn | Date: / Comments / Init. | Mountain Residency P.O. Box 399 Dumont, CO 80436 Phone: 303-512-5750 FAX: 303-512-5775 | No Revisions: |
| Horiz. Scale: 1:15 Vert. Scale: As Noted | R-X | Region 1 DCW | Revised: |
| Unit Information Unit Leader Initials | | | Void: |
| PBSJ 4601 DTC Boulevard, Suite 700 Denver, CO 80237 Phone: (303) 221-7275 Fax: (303) 221-7276 | | | |

| | | | |
|---|---|---|---|
| POTENTIAL CONSTRUCTION PHASING TYPICAL SECTIONS | | | Project No./Code |
| Designer: SRB | Structure Numbers | | STA 0091-035 |
| Detailer: SRB | | | 16439 |
| Sheet Subset: PHASING | Subset Sheets: 2 of 7 | | Sheet Number 179 |

21698 9:55:14 AM S:\Tranproj\246220-05\14927\Consultants\Plot_Sets\SHELF\16439PhasingTYP01.dgn

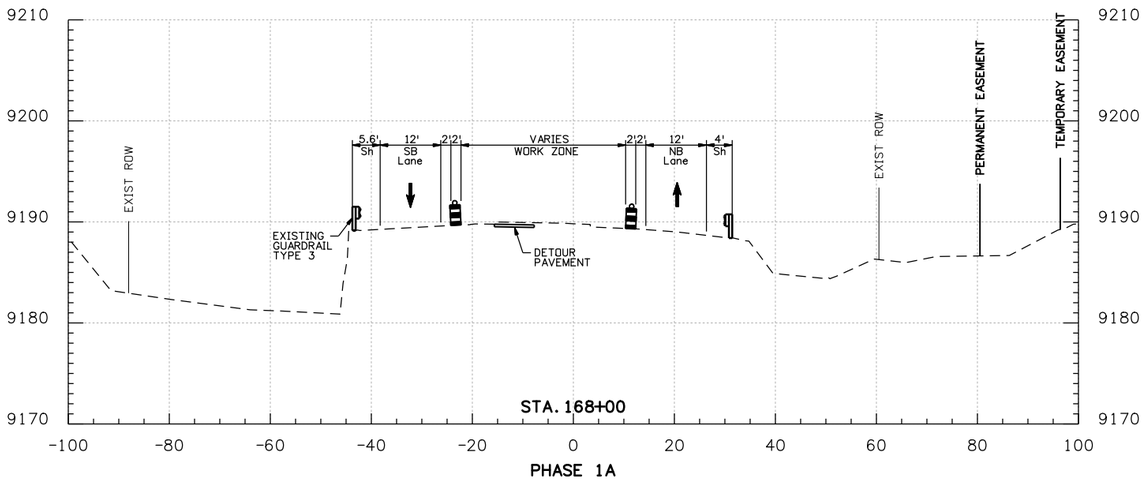


PHASE 1A

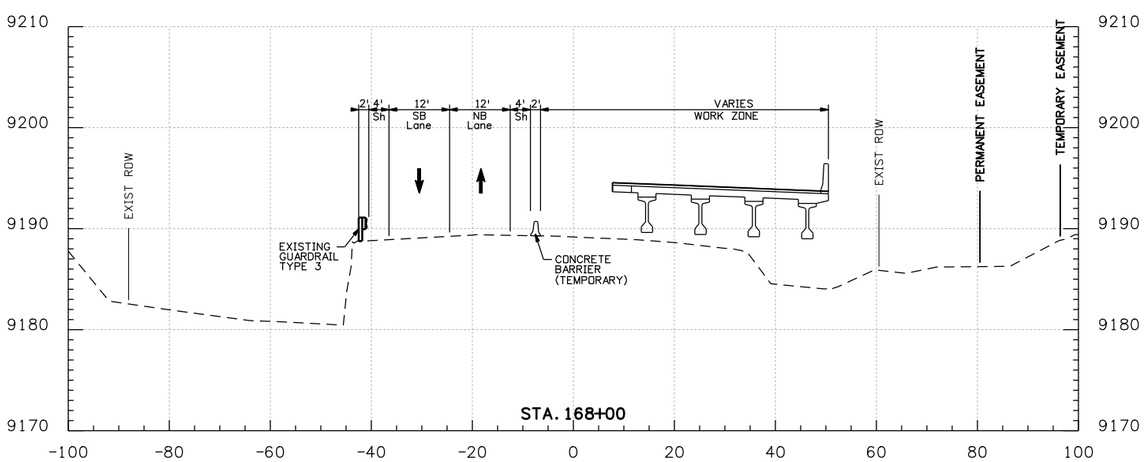


PHASE 1B

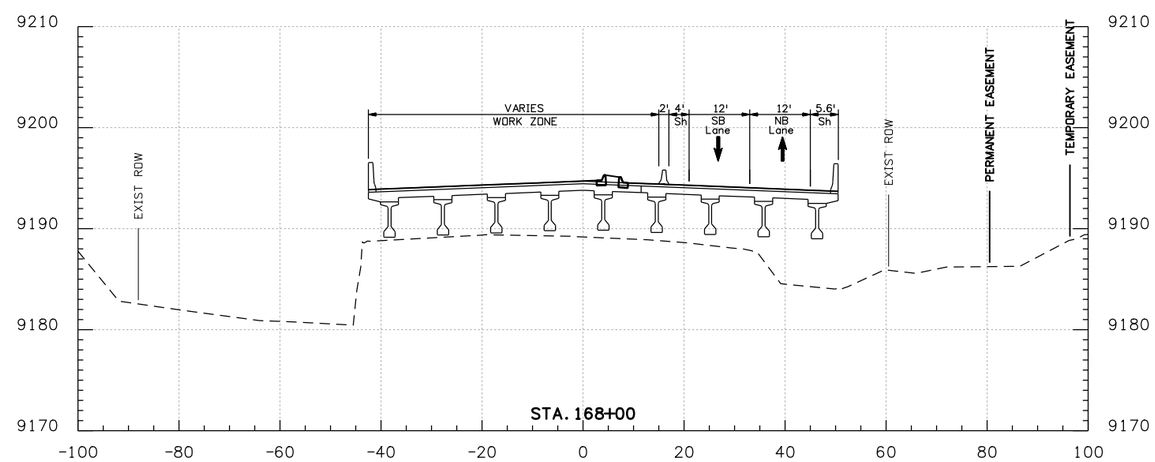


PHASE 2

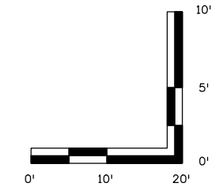


| | | | |
|---|---|---|---|
| Print Date: 1/26/2009 | Sheet Revisions | Colorado Department of Transportation | As Constructed |
| File Name: 16439PhasingTYP02.dgn | Date: / Comments / Init. | DOT — Department of Transportation | No Revisions: |
| Horiz. Scale: 1:15 Vert. Scale: As Noted | R-X | Mountain Residency P.O. Box 399<br>Dumont, CO 80436<br>Phone: 303-512-5750 FAX: 303-512-5775 | Revised: |
| Unit Information Unit Leader Initials | | Region 1 DCW | Void: |
| PBSJ 4601 DTC Boulevard, Suite 700<br>Denver, CO 80237<br>Phone: (303) 221-7275 Fax: (303) 221-7276 | | | |

| POTENTIAL CONSTRUCTION PHASING TYPICAL SECTIONS | | | | Project No./Code |
|---|---|---|---|---|
| | | | | STA 0091-035 |
| Designer: SRB | Structure Numbers | | | 16439 |
| Detailer: SRB | | | | |
| Sheet Subset: PHASING | Subset Sheets: 3 of 7 | | | Sheet Number 180 |

21698 9:55:34 AM S:\Tranproj\246220-05\14927\Consultants\Plot_Sets\SHELF\16439PhasingTYP02.dgn

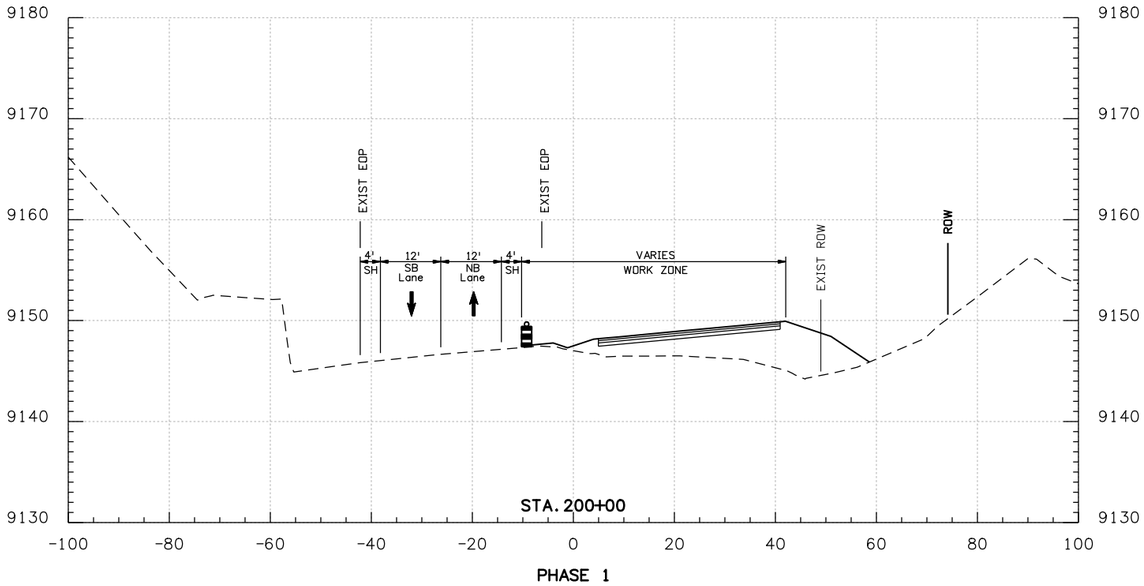


PHASE 1

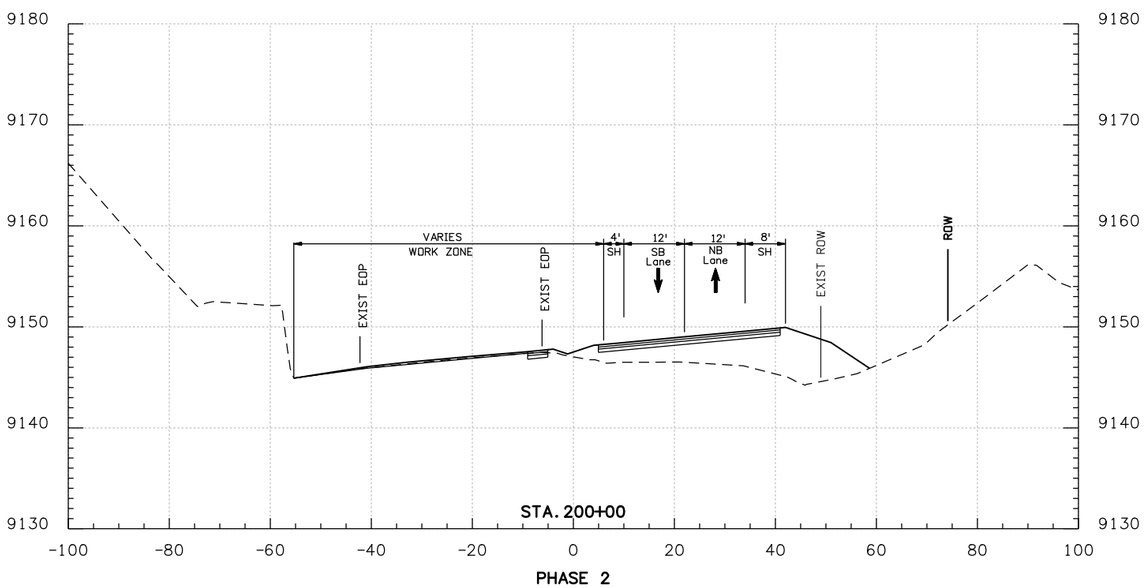


PHASE 2

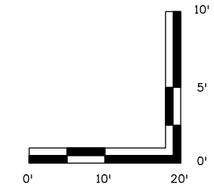


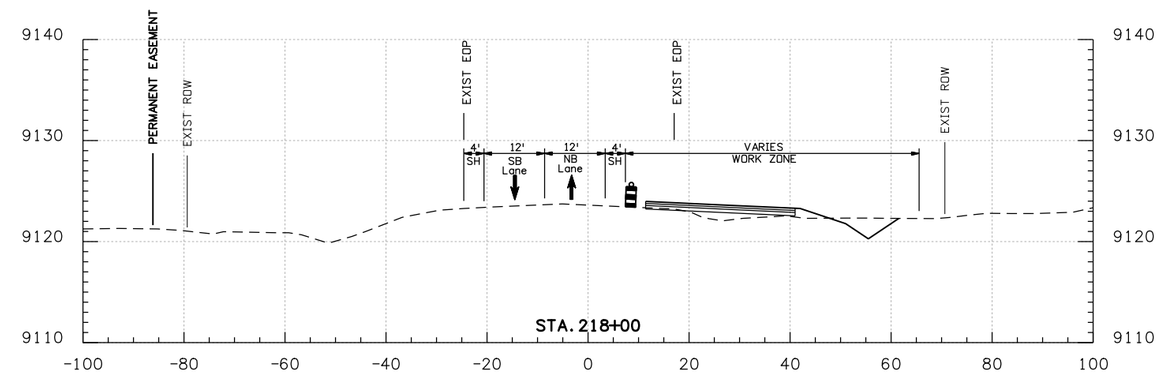


PHASE 1

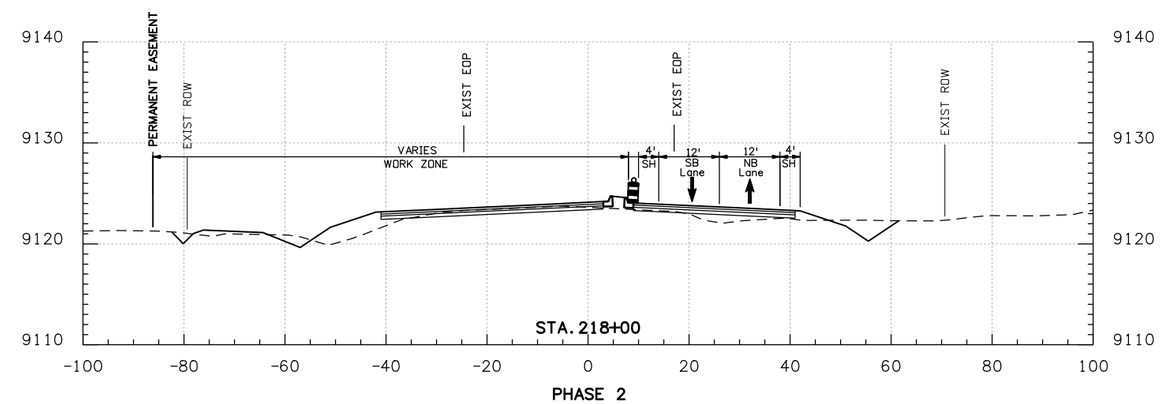


PHASE 2

| | | | |
|---|---|---|---|
| Print Date: 1/26/2009 | | Sheet Revisions | |
| File Name: 16439PhasingTYP03.dgn | | Date: | Comments | Init. |
| Horiz. Scale: 1:15 | Vert. Scale: As Noted | R-X | | |
| Unit Information | Unit Leader Initials | | | |

PBSJ 4601 DTC Boulevard, Suite 700 Denver, CO 80237 Phone: (303) 221-7275 Fax: (303) 221-7276

Colorado Department of Transportation

DOT DEPARTMENT OF TRANSPORTATION

Mountain Residency P.O. Box 399 Dumont, CO 80436 Phone: 303-512-5750 FAX: 303-512-5775

Region 1 DCW

As Constructed

No Revisions:

Revised:

Void:

POTENTIAL CONSTRUCTION PHASING TYPICAL SECTIONS

| | | | |
|---|---|---|---|
| Designer: | SRB | Structure Numbers | |
| Detailer: | SRB | | |
| Sheet Subset: | PHASING | Subset Sheets: | 4 of 7 |

Project No./Code

STA 0091-035

16439

Sheet Number 181

21698 9:56:10 AM S:\Tranproj\246220-05\14927\Consultants\Plot_Sets\SHELF\16439PhasingTYP03.dgn

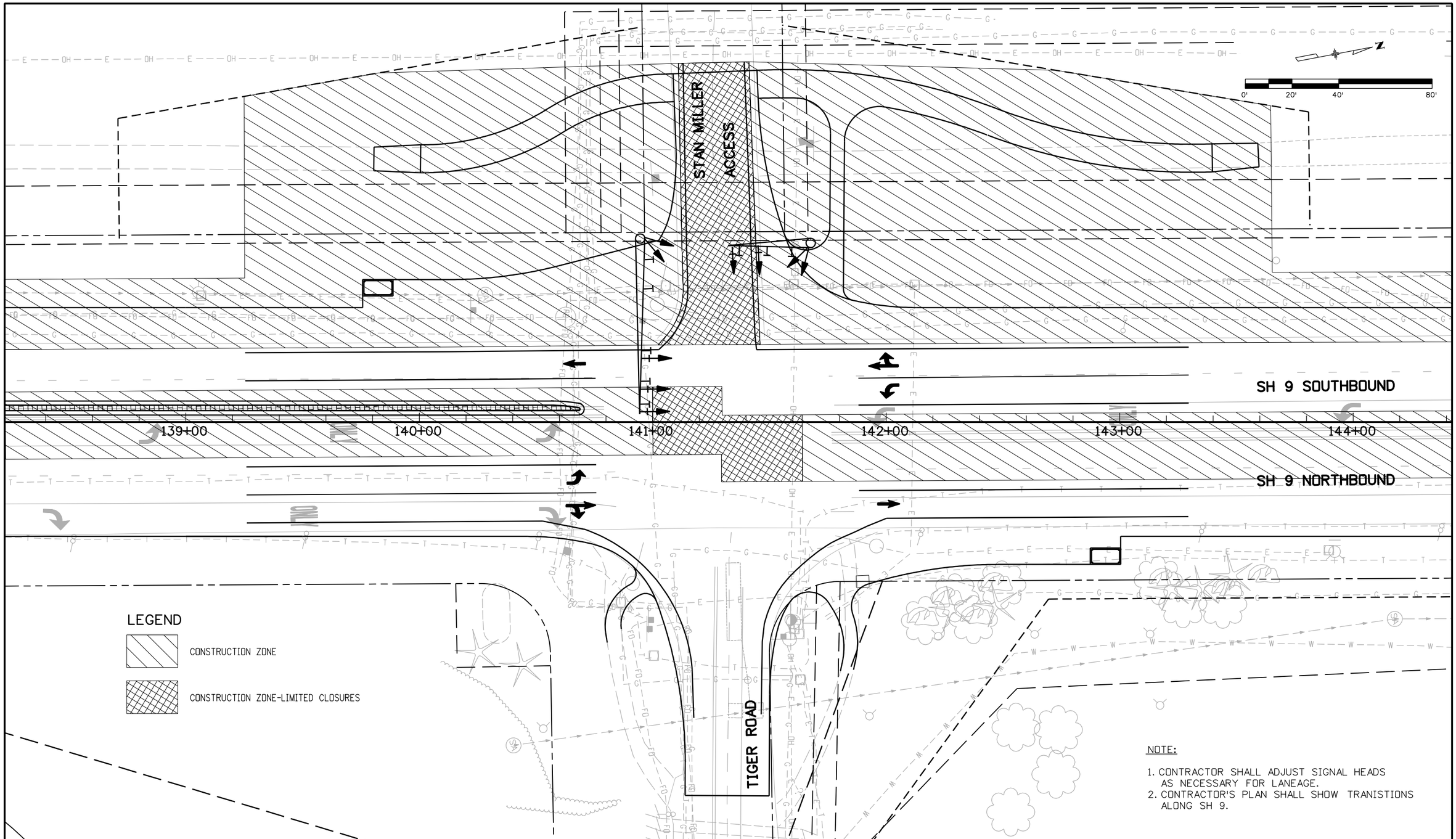


NOTE:

1. CONTRACTOR SHALL ADJUST SIGNAL HEADS AS NECESSARY FOR LANEAGE.
2. CONTRACTOR'S PLAN SHALL SHOW TRANISTIONS ALONG SH 9.

| | | | | | | | |
|---|---|---|---|---|---|---|---|
| Print Date: 1/26/2009 | | Sheet Revisions | | | Colorado Department of Transportation | As Constructed | POTENTIAL SH 9 CONSTRUCTION PH. 1A TIGER ROAD INTERSECTION | Project No./Code |
| File Name: 16439Phase01a.dgn | | Date: | Comments | Init. | | No Revisions: | | STA 0091-035 |
| Horiz. Scale: 1:40 Vert. Scale: As Noted | R-X | | | | Mountain Residency P.O. Box 399 Dumont, CO 80436 Phone: 303-512-5750 FAX: 303-512-5775 | Revised: | Designer: WRC / Structure Numbers | 16439 |
| Unit Information Unit Leader Initials | | | | | Region 1 DCW | Void: | Detailer: WRC | Sheet Number 182 |
| PBSJ 4601 DTC Boulevard, Suite 700 Denver, CO 80237 Phone: (303) 221-7275 Fax: (303) 221-7276 | | | | | | | Sheet Subset: PHASING / Subset Sheets: 5 of 7 | |

21698 9:56:52 AM S:\Tranproj\246220-05\14927\Consultants\Plot_Sets\SHELF\16439Phase01a.dgn

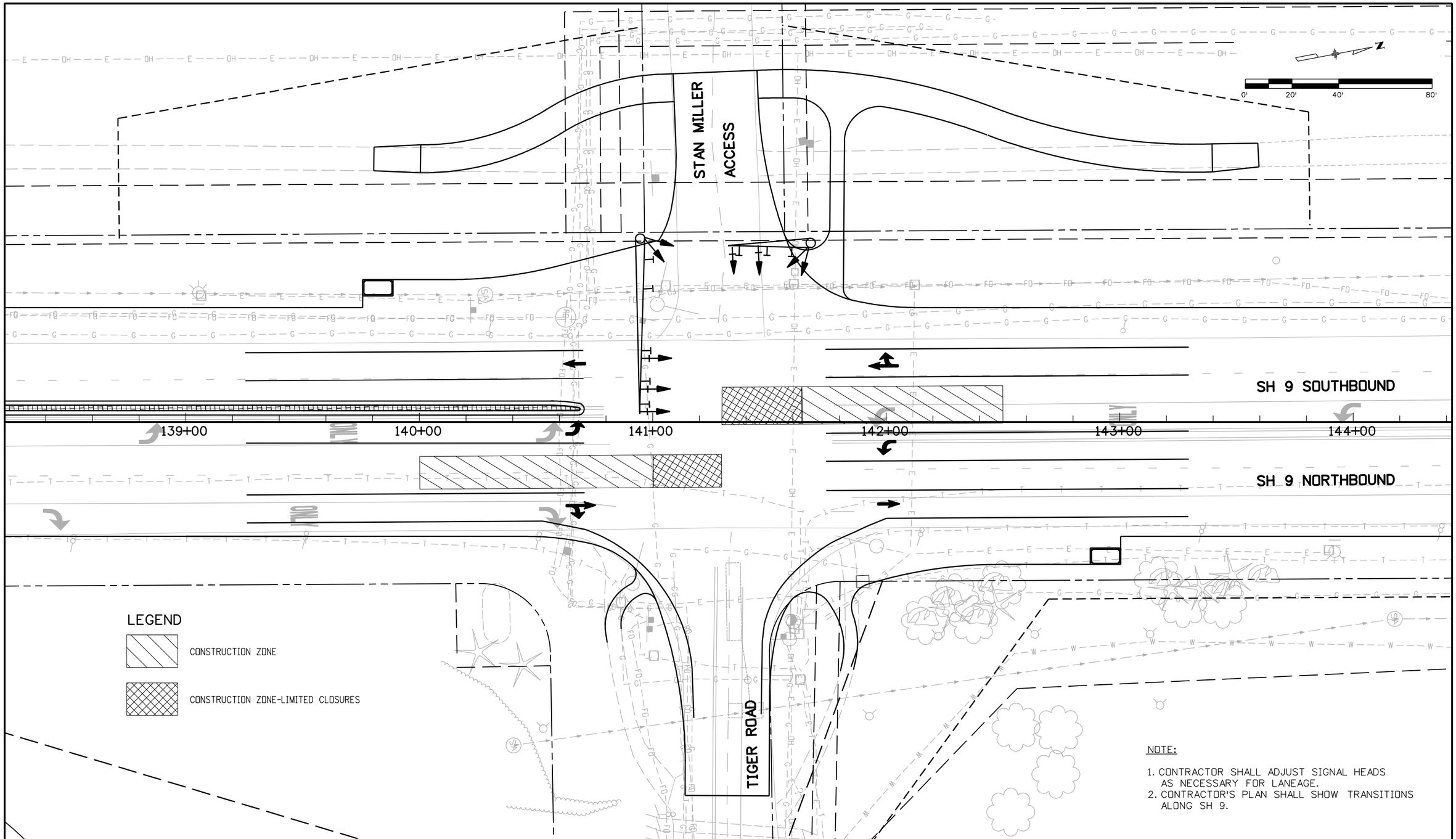


NOTE:

1. CONTRACTOR SHALL ADJUST SIGNAL HEADS AS NECESSARY FOR LANEAGE.
2. CONTRACTOR'S PLAN SHALL SHOW TRANSITIONS ALONG SH 9.

| | | | | | | | |
|---|---|---|---|---|---|---|---|
| Print Date: 1/26/2009 | | Sheet Revisions | | | Colorado Department of Transportation | As Constructed | POTENTIAL SH 9 CONSTRUCTION PH. 1B TIGER ROAD INTERSECTION | Project No./Code |
| File Name: 16439Phase01b.dgn | | Date: | Comments | Init. | | No Revisions: | | STA 0091-035 |
| Horiz. Scale: 1:40 Vert. Scale: As Noted | R-X | | | | Mountain Residency P.O. Box 399 Dumont, CO 80436 Phone: 303-512-5750 FAX: 303-512-5775 | Revised: | Designer: WRC / Structure Numbers | 16439 |
| Unit Information Unit Leader Initials | | | | | Region 1 DCW | Void: | Detailer: WRC | Sheet Number 183 |
| PBSJ 4601 DTC Boulevard, Suite 700 Denver, CO 80237 Phone: (303) 221-7275 Fax: (303) 221-7276 | | | | | | | Sheet Subset: PHASING / Subset Sheets: 6 of 7 | |

21698 9:57:14 AM S:\Tranproj\246220-05\14927\Consultants\Plot_Sets\SHELF\16439Phase01b.dgn

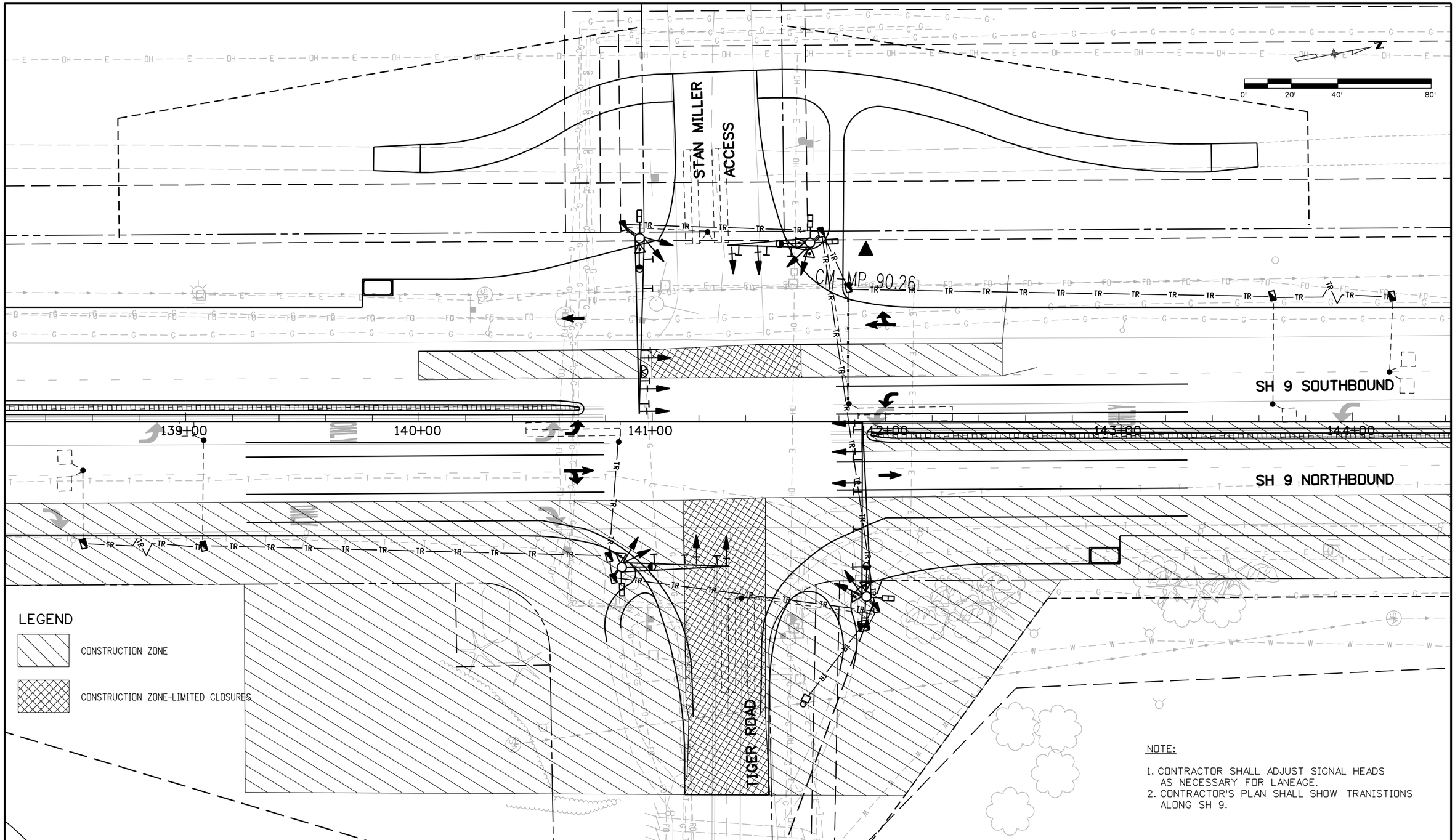


NOTE:

1. CONTRACTOR SHALL ADJUST SIGNAL HEADS AS NECESSARY FOR LANEAGE.
2. CONTRACTOR'S PLAN SHALL SHOW TRANISTIONS ALONG SH 9.

| | | | |
|---|---|---|---|
| Print Date: 1/26/2009 | | | |
| File Name: 16439Phase02.dgn | | | |
| Horiz. Scale: 1:40 | Vert. Scale: As Noted | | |
| Unit Information | Unit Leader Initials | | |

PBSJ 4601 DTC Boulevard, Suite 700 Denver, CO 80237 Phone: (303) 221-7275 Fax: (303) 221-7276

R-X

Sheet Revisions

| Date: | Comments | Init. |
|---|---|---|
| | | |
| | | |
| | | |
| | | |

Colorado Department of Transportation

DOT DEPARTMENT OF TRANSPORTATION

Mountain Residency P.O. Box 399
Dumont, CO 80436
Phone: 303-512-5750 FAX: 303-512-5775

Region 1 DCW

As Constructed

No Revisions:

Revised:

Void:

POTENTIAL SH 9 CONSTRUCTION
PH. 2 TIGER ROAD INTERSECTION

| | | | |
|---|---|---|---|
| Designer: | WRC | Structure Numbers | |
| Detailer: | WRC | | |
| Sheet Subset: | PHASING | Subset Sheets: | 7 of 7 |

Project No./Code

STA 0091-035

16439

Sheet Number 184

21698 9:57:37 AM S:\Tranproj\246220-05\14927\Consultants\Plot_Sets\SHELF\16439Phase02.dgn