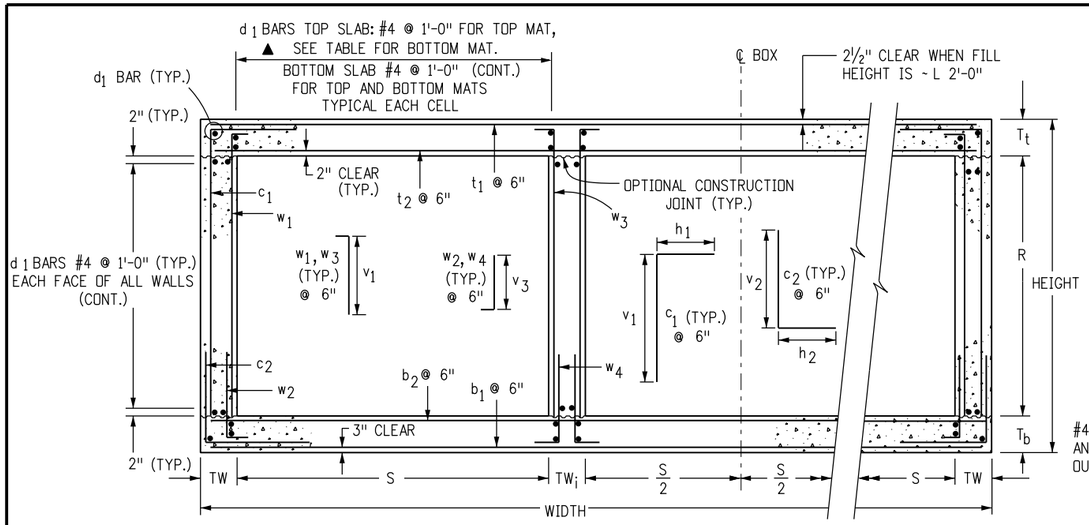

SECTION B-B

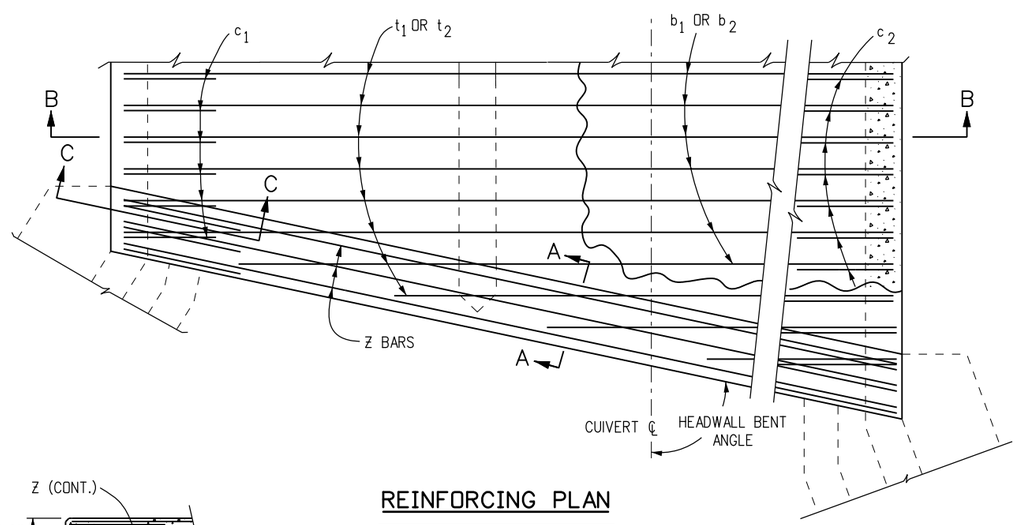

REINFORCING PLAN

BAR SIZE (#)	EPOXY X (FT.-IN.)	BLACK X (FT.-IN.)
4	2-4	1-11
5	2-10	2-4
6	3-5	2-10
7	4-1	3-3
8	5-3	4-3
9	6-8	5-5

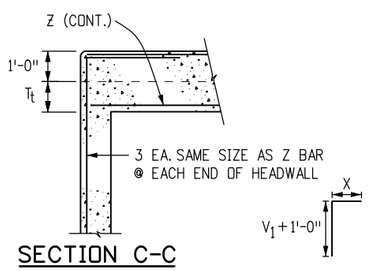

SECTION C-C

HEADWALL CORNER REINFORCING DETAIL

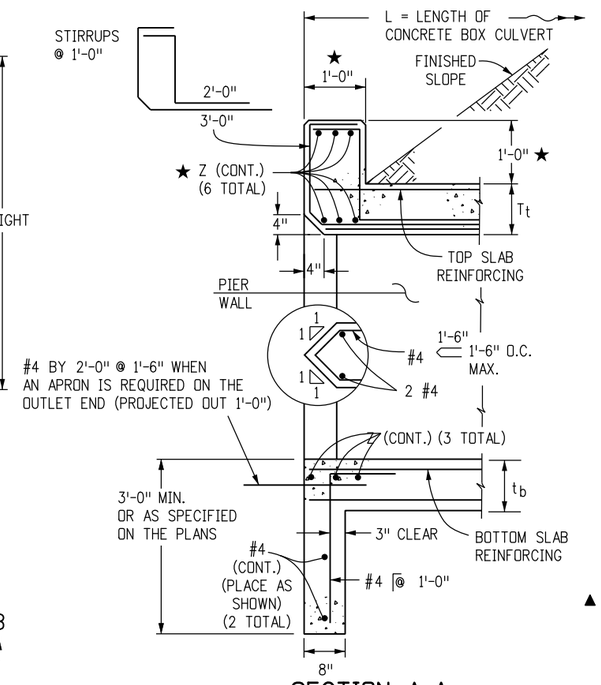

SECTION A-A

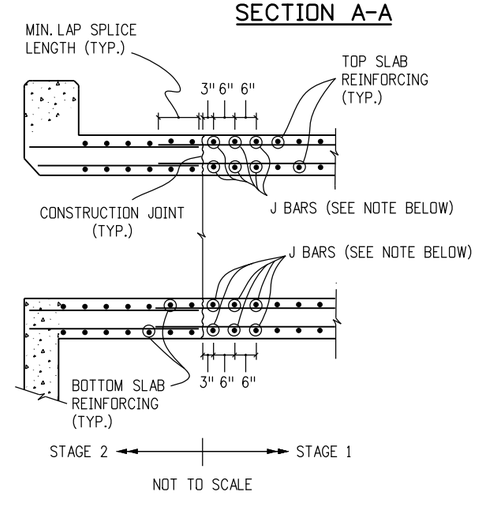

CONSTRUCTION JOINT DETAIL FOR STAGED CONSTRUCTION

NOTE: THIS DETAIL IS FOR CONSTRUCTION JOINTS INSTALLED PERPENDICULAR TO THE ℄ OF THE BOX ONLY. THE CONTRACTOR CAN DESIGN AND INSTALL J BARS AT HIS EXPENSE TO SUPPORT TEMPORARY LIVE LOADS DURING STAGE 1 CONSTRUCTION. J BARS SHALL BE THE SAME SIZE AS THE TOP AND BOTTOM SLAB REINFORCING WHEN THERE ARE NO TEMPORARY LIVE LOADS TO SUPPORT.

GENERAL NOTES

1. ALL CONCRETE SHALL BE CLASS D (BOX CULVERT).
2. ALL CONSTRUCTION JOINTS SHALL BE THOROUGHLY CLEANED BEFORE FRESH CONCRETE IS PLACED.
3. ALL CONSTRUCTION JOINTS NOT SHOWN ON THE PLANS SHALL BE CONSTRUCTED ONLY IF APPROVED BY THE ENGINEER.
4. THE CONTRACTOR SHALL MAINTAIN THE STABILITY OF THE STRUCTURE DURING CONSTRUCTION.
5. STRUCTURE EXCAVATION AND BACKFILL SHALL BE IN ACCORDANCE WITH STANDARD PLAN M-206-1.
6. FOR ANY CULVERT SPAN 20 FT. OR GREATER, A FOUNDATION INVESTIGATION AND REPORT ARE REQUIRED.
7. BACKFILL SHALL NOT BEGIN UNTIL TOP SLAB HAS REACHED DESIGN STRENGTH, f'c.
8. SPLICE QUANTITIES FOR LONGITUDINAL AND TRANSVERSE BARS ARE NOT INCLUDED.
9. REINFORCING STEEL SHALL BE GRADE 60.
10. THE MINIMUM LAP SPLICE LENGTH FOR EPOXY COATED REINFORCING BARS SHALL BE:

BAR SIZE:	#4	#5	#6	#7	#8	#9	#10	#11
SPLICE LENGTH:	1'-3"	1'-7"	2'-5"	2'-10"	3'-8"	4'-8"	5'-11"	7'-3"

THE MINIMUM LAP SPLICE LENGTH FOR BLACK REINFORCING BARS SHALL BE:

BAR SIZE:	#4	#5	#6	#7	#8	#9	#10	#11
SPLICE LENGTH:	1'-1"	1'-4"	1'-7"	1'-11"	2'-6"	3'-1"	3'-11"	4'-10"

THE ABOVE SPLICE LENGTHS ARE FOR CLASS B SPLICES.

11. ALL DIMENSIONS ARE PERPENDICULAR TO THE CENTERLINE OF THE BOX.
12. WINGWALLS SHALL BE TIED TO CONCRETE BOX CULVERT IN ACCORDANCE WITH STANDARD PLAN M-601-20.
13. ALL TRANSVERSE REINFORCING SHALL BE NORMAL TO THE CENTERLINE OF THE BOX.
14. THE FILL HEIGHT IS THE DISTANCE MEASURED FROM THE TOP OF THE TOP SLAB TO THE TOP OF PAVEMENT.
15. ALL EXPOSED CONCRETE CORNERS SHALL BE CHAMFERED ¾ IN.
16. FOR FILL HIEGHTS LESS THAN 2 FT, A WATERPROOFING MEMBRANE SHALL BE PROVIDED FOR THE TOP OF THE TOP SLAB AND 18" DOWN ALONG THE TOPS OF THE EXTERIOR WALLS.

▲ 17. FOR FILL HIEGHTS LESS THAN 2 FT. THE d_1 BARS FOR THE BOTTOM MAT OF THE TOP SLAB SHALL BE AS FOLLOWS:

S	8, 9, 10	14, 16, 18	20
BAR SIZE:	#5	#6	#7
SPACING	1'-0"	1'-0"	1'-0"

DESIGN DATA: 7TH EDITION, 2014, OF THE AASHTO LRFD BRIDGE DESIGN SPECIFICATIONS

RATING DATA: 2ND EDITION, 2011, OF THE AASHTO MANUAL FOR BRIDGE EVALUATION

LOADING DATA: f_y = 60,000 psi., f'_c = 4,500 psi.,

LIVE LOAD = AASHTO LRFD, HL-93 TRUCK, HL-93 TANDEM, COLORADO PERMIT TRUCK AND NRL

DEAD LOAD CASE 1: VERTICAL EARTH LOAD = 120 LBS./CU. FT.
HORIZONTAL EARTH LOAD = 30 LBS./CU.FT.

DEAD LOAD CASE 2: VERTICAL EARTH LOAD = 120 LBS./CU. FT.
HORIZONTAL EARTH LOAD = 60 LBS./CU. FT.

WEARING SURFACE - 12 IN. THICK CONCRETE PAVEMENT.

DEAD LOAD - TYPE 7 BARRIER.

THRUST IS NOT CONSIDERED IN THIS STANDARD, I.E. THRUST = 0.

EXTREME HEADWATER TO DEPTH RATIO IS IN ACCORDANCE WITH THE CDOT DRAINAGE MANUAL.

EXTREME HEADWATER TO DEPTH RATIO WAS INCLUDED IN THE CULVERT DESIGNS BUT EXCLUDED FROM THE RATINGS AS PER THE AASHTO MANUAL FOR BRIDGE EVALUATION.

LIVE LOAD SURCHARGE ON EXTERIOR WALLS = 2 FT. OF EARTH

★ IF HEADWALL MOUNT GUARDRAIL IS USED (SEE STANDARD PLAN M-606-1, SHEET 19 AND NOTES BELOW):
- ALL REINFORCING STEEL SHALL BE ACCORDING TO THIS BOX CULVERT PLAN.
- ANY SPECIAL DESIGN FOR STIRRUPS WILL NOT BE MEASURED AND PAID FOR SEPARATELY BUT SHALL BE INCLUDED IN THE WORK.
- HEADWALL DIMENSION AND CONCRETE QUANTITY SHALL BE ACCORDING TO STANDARD PLAN M-606-1, SHEET 19.
- POST ANCHORS SHALL BE PROVIDED ACCORDING TO STANDARD PLAN M-606-1, SHEET 19.
- POST ANCHORS AND CONCRETE FOR HEADWALL MOUNT OF GUARDRAIL WILL NOT BE MEASURED AND PAID FOR SEPARATELY BUT SHALL BE INCLUDED IN THE WORK.
- POST ANCHORS WHEN REQUIRED AND ENCASED IN HEADWALL CONCRETE, SHALL CONFORM TO ASTM A 36 OR AASHTO M 169 STEEL.

Computer File Information	
Creation Date: 07/04/12	Initials: DD
Last Modification Date: 11/25/15	Initials: JBE
Full Path: www.codot.gov/business/designsupport	
Drawing File Name: 601030102.dgn	
CAD Ver.: MicroStation V8 Scale: Not to Scale	Units: English

	Sheet Revisions	
	Date:	Comments
R-1	08/27/13	LRFD Design
R-2	08/01/15	Analysis Program Updates

Colorado Department of Transportation
4201 East Arkansas Avenue
CDOT HQ, 4th Floor
Denver, CO 80222
Phone: 303-757-9021 FAX: 303-757-9868
Division of Project Support DDG/Bridge

TRIPLE CONCRETE BOX CULVERT

Issued By: Project Development Branch July 4, 2012

STANDARD PLAN NO.

M-601-3

Sheet No. 1 of 2

TRIPLE CONCRETE BOX CULVERT DIMENSIONS, QUANTITIES & RATING FACTORS (EXCLUDING HEADWALL & TOEWALL QUANTITIES)

BOX SIZE S	BOX SIZE R	BOX SIZE HT.	BOX SIZE WIDTH	FILL HEIGHT ALLOWED	SLAB & WALL THICKNESS (INCHES) T_t	T_b	TW & TW_i	BAR SIZES t_1*	t_2	b_1	b_2	w_1* & w_2	w_3* & w_4	c_1*	c_2	d_1▲	DIMENSIONS h_1	h_2	v_1	v_2	v_3	QUANTITIES CONCRETE	REBAR STL	WATERPROOFING	RATING FACTORS HL-93 INVENTORY	HL-93 OPERATING	COLORADO PERMIT	NRL VEHICLE
FT	FT	FT-IN	FT-IN	FT-FT				#	#	#	#	#	#	#	#	NO.	FT-IN	FT-IN	FT-IN	FT-IN	FT-IN	CY/LF	LBS/LF	SY/LF				
8	6	7-10.5	27-4	< 2	12.5	10	10	5	6	5	6	4	4	5	5	168	3-5	2-4	6-10	2-4	1-11	2.639	531	3.370	1.21	1.57	1.82	1.69
		7-9.5	27-4	2 TO 8	10.5	11	10	4	5	4	5	4	4	5	5	168	2-6	2-4	6-8	3-2	2-0	2.555	429		1.47	1.90	2.07	1.83
		8-0	27-4	8 TO 12	11	13	10	4	5	4	5	4	4	5	5	168	2-6	2-4	6-9	3-4	2-2	2.765	432		3.38	4.39	4.80	5.22
		8-0	27-4	12 TO 16	11	13	10	5	4	4	4	5	5	5	5	168	2-6	2-4	6-9	3-4	2-2	2.765	462		6.80	8.81	9.35	8.63
		8-0	27-4	16 TO 20	11	13	10	5	4	5	4	5	5	5	5	168	2-4	2-4	6-9	3-5	2-2	2.765	482		1.69	2.19	2.20	2.27
		8-3.5	27-4	20 TO 25.9	13	14.5	10	5	5	5	5	5	5	5	5	168	2-6	2-4	6-11	2-4	2-3	3.061	523		6.80	8.82	8.50	5.95
		8-4.5	27-10	26 TO 30	13.5	15	11.5	5	6	5	6	5	5	5	5	168	3-3	2-6	6-11	3-6	2-4	3.300	587		◆	◆	◆	◆
	8	9-10.5	27-4	< 2	12.5	10	10	5	6	5	6	4	4	5	5	184	3-5	2-4	8-10	3-1	1-11	2.886	566	3.370	1.21	1.57	1.82	1.65
		9-9.5	27-4	2 TO 8	10.5	11	10	4	5	4	5	4	4	5	5	175	2-6	2-4	8-8	3-2	2-0	2.801	461		1.46	1.89	2.00	1.82
		10-0	27-4	8 TO 12	11	13	10	4	5	4	5	4	4	5	5	184	2-6	2-4	8-9	3-4	2-2	3.012	464		3.45	4.47	4.89	5.12
		10-0	27-4	12 TO 16	11	13	10	5	4	4	5	4	4	5	5	184	2-6	2-4	8-9	2-4	2-2	3.012	460		2.53	3.27	3.47	3.73
		10-4	27-4	16 TO 20	13.5	14.5	10	5	4	5	5	4	4	5	5	184	3-3	2-4	8-11	3-5	2-2	3.350	490		3.07	3.98	3.84	2.72
		10-4	27-6	20 TO 25.9	13.5	14.5	10.5	5	6	5	5	6	6	5	5	184	3-3	2-4	8-11	3-6	2-3	3.414	675		1.78	2.32	2.23	1.56
		10-4.5	27-10	26 TO 30	13.5	15	11.5	5	5	5	5	5	5	5	5	184	3-3	2-6	8-11	3-6	2-4	3.584	578		◆	◆	◆	◆
10	6	8-0	33-4	< 2	14	10	10	6	7	6	7	5	5	5	5	192	3-5	2-4	6-11	3-1	1-11	3.210	796	4.037	1.20	1.55	1.44	1.37
		7-9	33-4	2 TO 8	11	10	10	6	7	6	7	5	5	5	5	192	2-6	2-4	6-9	2-4	1-11	2.901	774		1.56	2.02	1.81	1.73
		8-1	33-4	8 TO 12	11.5	13.5	10	5	7	5	7	5	5	5	5	192	2-6	2-4	6-9	3-4	2-2	3.313	721		2.81	3.65	3.73	4.04
		8-2.5	33-4	12 TO 16	12	14.5	10	6	6	5	7	5	5	5	5	192	2-6	2-4	6-10	3-7	2-4	3.467	720		2.67	3.47	3.58	3.84
		8-6	33-4	16 TO 22	14	16	10	6	5	6	5	5	5	5	5	192	2-6	2-4	7-0	3-7	2-5	3.827	658		2.44	3.17	3.04	3.14
	8	10-0	33-6	< 2	14	10	10.5	6	7	6	7	5	5	5	5	208	3-5	2-4	8-11	3-1	1-11	3.519	840	4.056	1.20	1.56	1.40	1.33
		9-11.5	33-4	2 TO 6	11.5	12	10	6	7	6	7	5	5	5	5	208	2-6	2-4	8-9	2-4	2-0	3.405	817		1.65	2.14	2.44	2.39
		10-1	33-4	6 TO 8	11.5	13.5	10	5	7	5	7	5	5	5	5	208	2-6	2-4	8-9	3-3	2-0	3.560	760		3.11	4.04	3.99	4.60
		10-1	33-4	8 TO 12	11.5	13.5	10	5	7	5	7	5	5	5	5	208	2-6	2-4	8-9	3-5	2-2	3.560	763		2.85	3.69	3.76	4.07
		10-5	33-4	12 TO 16	13.5	15.5	10	5	7	5	7	5	5	5	5	208	2-6	2-4	8-11	3-7	2-4	3.971	768		3.36	4.36	4.60	4.04
		10-6	33-4	16 TO 22	14	16	10	6	7	6	7	5	5	5	5	208	2-6	2-4	9-0	3-7	2-5	4.074	831		2.37	3.08	2.93	2.10
	10	12-0	33-6	< 2	14	10	10.5	6	7	6	7	5	5	5	5	224	3-5	2-4	10-11	2-4	1-11	3.778	879	4.056	1.17	1.52	1.36	1.30
		11-10.5	33-6	2 TO 8	11.5	11	10.5	6	7	6	7	5	5	5	5	224	2-6	2-4	10-9	3-2	2-0	3.623	864		1.65	2.14	2.15	2.06
		12-0.5	33-8	8 TO 12	11.5	13	11	5	7	5	7	5	5	5	5	224	2-6	2-5	10-9	3-4	2-2	3.904	808		3.09	4.00	3.92	3.08
		12-3	33-4	12 TO 14	12.5	14.5	10	5	5	5	5	5	5	5	5	224	2-6	2-4	10-10	3-6	2-3	4.012	675		1.68	2.17	2.10	1.50
		12-5	33-6	14 TO 16	13.5	15.5	10.5	5	7	5	7	5	5	5	5	224	2-6	2-4	10-11	3-7	2-4	4.295	812		1.59	2.06	1.99	1.41
		12-6	34-0	16 TO 22	14	16	12	6	7	6	7	5	5	6	6	224	2-10	2-8	11-0	2-4	2-5	4.630	914		1.40	1.82	1.75	1.24
12	6	8-1	39-6	< 2	15	10	10.5	6	7	6	7	5	5	5	5	216	3-9	2-4	7-0	3-1	1-11	3.826	905	4.722	1.03	1.33	1.14	1.15
		7-11.5	39-4	2 TO 4	12.5	11	10	6	7	6	7	5	5	5	5	203	2-6	2-4	6-10	3-2	2-0	3.594	881		1.34	1.74	1.46	1.55
		8-2	39-4	4 TO 8	13.5	12.5	10	5	7	5	7	5	5	5	5	216	2-6	2-4	6-11	3-7	2-5	3.897	818		1.10	1.42	1.27	1.36
		8-6.5	39-4	8 TO 10	14.5	16	10	5	7	5	7	5	5	5	5	216	3-3	2-4	7-0	3-7	2-5	4.443	823		2.22	2.88	2.82	3.06
		8-8	39-6	10 TO 12	16	16	10.5	6	5	6	5	5	5	5	5	216	3-3	2-4	7-2	2-4	2-3	4.679	735		3.48	4.51	4.97	5.27
		8-8	39-8	12 TO 16	16	16	11	6	5	6	5	5	5	5	5	216	3-3	2-5	7-2	3-7	2-5	4.733	745		2.48	3.22	3.40	3.59
		8-11	39-8	16 TO 18	17	18	11	6	5	6	5	5	5	5	5	216	3-3	2-4	7-3	3-9	2-7	5.100	748		2.09	2.71	2.79	2.86
	8	10-1.5	39-6	< 2	15	10.5	10.5	6	7	6	7	5	5	6	6	232	3-9	2-8	9-0	3-5	1-11	4.146	984	4.722	1.07	1.39	1.19	1.20
		9-11.5	39-4	2 TO 4	12.5	11	10	6	7	6	7	5	5	5	5	232	2-6	2-4	8-10	3-2	2-0	3.841	923		1.31	1.70	1.44	1.52
		10-2.5	39-4	4 TO 8	13.5	13	10	5	5	5	5	5	5	5	5	232	2-6	2-4	8-11	2-4	2-2	4.205	695		1.15	1.50	1.34	1.43
		10-9.5	39-8	8 TO 12	16	17.5	11	5	5	5	5	5	5	5	5	232	3-3	2-5	9-2	3-9	2-6	5.188	716		2.51	3.26	2.93	3.11
		10-11	39-8	12 TO 18	17	18	11	6	5	6	5	5	5	5	5	232	3-3	2-5	9-3	3-9	2-7	5.371	790		1.98	2.57	2.63	2.71
	10	12-3	39-6	< 2	16	11	10.5	6	7	6	7	5	5	6	6	248	4-4	2-8	11-1	2-8	2-0	4.588	1030	4.722	1.11	1.44	1.23	1.24
		11-11.5	39-4	2 TO 4	12.5	11	10	6	7	6	7	5	5	5	5	248	2-6	2-4	10-10	3-2	2-0	4.087	964		1.30	1.69	1.43	1.50
		12-4.5	39-4	4 TO 8	13.5	15	10	5	5	5	5	5	5	5	5	248	2-6	2-4	10-11	2-4	2-4	4.694	739		1.60	2.07	2.17	2.61
		12-9.5	39-8	8 TO 12	16	17.5	11	5	5	5	5	5	5	5	5	248	3-3	2-5	11-2	3-9	2-6	5.459	757		2.57	3.34	3.00	3.06
		12-11	39-8	12 TO 18	17	18	11	6	5	6	5	5	5	5	5	248	3-3	2-5	11-3	3-9	2-7	5.643	832		1.36	1.77	1.70	1.21
14	6	8-3	45-6	< 2	16	11	10.5	7	8	7	8	5	5	5	5	240	3-9	2-4	7-1	3-2	2-0	4.569	1243	5.389	1.00	1.30	1.10	1.12
		8-1	45-4	2 TO 4	13	12	10	7	8	7	8	5	5	5	5	240	2-6	2-4	6-11	3-3	2-1	4.239	1196		1.31	1.69	1.67	1.69
		8-2	45-4	4 TO 8	13	13	10	7	8	7	8	5	5	5	5	240	2-6	2-4	6-11	2-4	2-2	4.379	1193		1.98	2.57	2.82	2.90
		8-5	45-8	8 TO 12	14	15	11	7	8	7	8	5	5	6	6	240	2-10	2-9	7-0	3-10	2-4	4.902	1242		3.51	4.54	3.93	4.17
	8	10-3.5	45-6	< 2	16	11.5	10.5	7	8	7	8	5	5	5	5	256	3-9	2-4	9-1	3-2	2-0	4.899	1284	5.389	1.04	1.35	1.14	1.16
		10-1	45-4	2 TO 4	13	12	10	7	8	7	8	5	5	5	5	256	2-6	2-4	8-11	3-3	2-1	4.486	1237		1.43	1.86	1.63	1.65
		10-2	45-4	4 TO 8	13	13	10	7	8	7	8	5	5	5	5	256	2-6	2-4	8-11	3-4	2-2	4.626	1238		2.10	2.73	2.76	2.84
		10-5	46-0	8 TO 12	14	15	12	7	8	7	8	5	5	6	6	256	2-10	2-10	9-0	2-4	2-4	5.302	1285		3.52	4.56	3.95	4.19
	10	12-4.5	45-6	< 2	16.5	12	10.5	7	8	7	8	5	5	5	5	272	3-9	2-4	11-2	3-2	2-1	5.299	1328	5.389	1.07	1.39	1.18	1.20
		12-1	45-4	2 TO 4	13	12	10	7	8	7	8	5	5	5	5	272	2-6	2-4	10-11	3-3	2-1	4.733	1278		1.41	1.83	1.61	1.62
		12-2	45-4	4 TO 8	13	13	10	7	8	7	8	5	5	5	5	272	2-6	2-4	10-11	3-4	2-2	4.872	1280		1.95	2.53	2.62	2.81
		12-5.5	46-0	8 TO 12	14	15.5	12	7	8	7	8	7	7	6	6	272	2-10	2-10	11-0	3-11	2-4	5.670	1561		3.77	4.89	4.56	3.99
16	6	8-5	51-6	< 2	16.5	12.5	10.5	7	8	7	8	5	5	6	6	264	4-4	2-8	7-2	2-4	2-1	5.387	1410	6.056	1.07	1.39	1.13	1.18
		8-1.5	51-4	2 TO 4	13	12.5	10	7	8	7	8	5	5	6	6	264	2-10	2-8	6-11	3-8	2-1	4.781	1359		1.25	1.62	1.31	1.37
		8-2	51-4	4 TO 6	13	13	10	7	8	7	8	5	5	6	6	264	2-10	2-10	6-11	3-8	2-2	4.860	1361		1.64	2.13	1.75	1.77
		8-3.5	51-4	6 TO 8	13.5	14	10	7	8	7	8	5	5	6	6	264	2-10	2-8	6-11	3-9	2-3	5.098	1361		1.75	2.27	1.87	1.92
		8-6	51-8	8 TO 10	14.5	15.5	11	7	8	7	8	5	5	6	6	264	3-8	2-9	7-0	3-11	2-4	5.599	1377		2.06	2.68	2.21	2.28
	8	10-5	51-6	< 2	16.5	12.5	10.5	7	8	7	8	5	5	6	6	280	4-4	2-8	9-2	2-4	2-1	5.647	1455	6.056	1.02	1.33	1.08	1.13
		10-3	51-4	2 TO 4	14	13	10	7	8	7	8	5	5	6	6	280	2-10	2-8	9-0	3-8	2-2	5.265	1406		1.31	1.70	1.38	1.44
		10-3	51-4	4 TO 6	14	13	10	7	8	7	8	5	5	6	6	280	2-10	2-8	9-0	3-8	2-2	5.265	1406		1.57	2.03	1.67	1.70
		10-4.5	51-4	6 TO 8	14	14.5	10	7	8	7	8	5	5	6	6	280	2-10	2-8	9-0	3-10	2-4	5.503	1410		2.01	2.61	2.15	2.21
		10-6.5	51-8	8 TO 10	15	15.5	11	7	8	7	8	6	6	6	6	280	3-8	2-9	9-1	3-11	2-4	5.950	1519		1.99	2.58	2.13	2.21
	10	12-6	51-6	< 2	17	13	10.5	7	8	7	8	5	5	6	6	296	4-4	2-8	11-2	2-4	2-1	6.065	1500	6.056	1.06	1.37	1.12	1.16
		12-3	51-4	2 TO 4	14	13	10	7	8	7	8	5	5	6	6	296	2-10	2-8	11-0	3-8	2-2	5.512	1452		1.30	1.68	1.36	1.43
		12-3	51-4	4 TO 6	14	13	10	7	8	7	8	5	5	6	6	296	2-10	2-8	11-0	3-8	2-2	5.512	1452		1.54	2.00	1.64	1.68
		12-5	51-4	6 TO 8	14	15	10	7	8	7	8	5	5	6	6	296	2-10	2-8	11-0	3-10	2-4	5.829	1455		2.24	2.91	2.50	2.57
		12-7	51-8	8 TO 10	15	16	11	7	8	7	8	5	5	6	6	296	3-8	2-9	11-1	3-11	2-5	6.301	1469		2.35	3.05	2.52	2.61
18	6	8-6.5	57-6	< 2	17	13.5	10.5	7	8	7	8	5	5	7	7	288	5-0	3-1	7-2	2-4	2-1	6.191	1589	6.722	1.07	1.39	1.09	1.16
		8-5	57-4	2 TO 4	15	14	10	7	8	7	8	5	5	6	6	288	3-8	2-8	7-1	3-9	2-3	5.872	1499		1.15	1.50	1.15	1.25
		8-6.5	57-8	4 TO 6	15.5	15	11	7	8	7	8	5	5	6	6	288	3-8	2-9	7-1	3-10	2-4	6.243	1507		1.50	1.94	1.52	1.57
		8-9	57-8	6 TO 8	16	17	11	7	8	7	8	5	5	6	6	288	3-8	2-9	7-2	4-0	2-6	6.688	1512		1.91	2.48	1.98	2.04
	8	10-6.5	57-6	< 2	17	13.5	10.5	7	8	7	8	5	5	7	7	304	5-0	3-1	9-2	4-1	2-1	6.450	1653	6.722	1.02	1.33	1.05	1.11
		10-5	57-4	2 TO 4	15	14	10	7	8	7	8	5	5	6	6	304	3-8	2-8	9-1	2-4	2-3	6.119	1535		1.13	1.46	1.13	1.22
		10-6.5	57-8	4 TO 6	15.5	15	11	7	8	7	8	5	5	6	6	304	3-8	2-9	9-1	3-10	2-4	6.515	1552		1.44	1.87	1.47	1.52
		10-9	57-8	6 TO 8	16	17	11	7	8	7	8	5	5	6	6	304	3-8	2-9	9-2	4-0	2-6	6.960	1557		1.88	2.44	1.93	1.99
	10	12-7	57-6	< 2	17	14	10.5	7	8	7	8	5	5	7	7	320	5-0	3-1	11-2	4-1	2-2	6.798	1703	6.722	1.06	1.38	1.08	1.15
		12-5	57-4	2 TO 4	15	14	10	7	8	7	8	5	5	6	6	320	3-8	2-8	11-1	3-9	2-3	6.366	1589		1.11	1.44	1.11	1.20
		12-6.5	57-8	4 TO 6	15.5	15	11	7	8	7	8	5	5	6	6	320	3-8	2-9	11-1	2-4	2-4	6.787	1588		1.41	1.83	1.43	1.49
		12-9	57-8	6 TO 8	16	17	11	7	8	7	8	5	5	6	6	320	3-8	2-9	11-2	4-0	2-6	7.231	1602		1.85	2.40	1.90	1.97
20	6	8-8	63-8	< 2	18	14	11	8	9	8	9	6	6	7	7	312	5-0	3-2	7-3	4-2	2-6	7.103	2195	7.407	1.00	1.30	1.00	1.07
		8-8	63-8	2 TO 4	16	16	11	7	8	7	8	5	5	6	6	312	3-8	2-9	7-2	3-11	2-5	7.103	1639		1.14	1.47	1.13	1.25
		8-8	63-8	4 TO 6	16	16	11	8	8	8	8	5	5	6	6	312	3-8	2-9	7-2	3-11	2-5	7.103	1798		1.61	2.09	2.00	2.27
	8	10-8.5	63-8	< 2	18	14.5	11	8	9	8	9	6	6	7	7	328	5-0	3-2	9-3	2-4	2-6	7.473	2259	7.407	1.02	1.33	1.02	1.09
		10-8	63-8	2 TO 4	16	16	11	7	8	7	8	5	5	6	6	328	3-8	2-9	9-2	3-11	2-5	7.374	1684		1.14	1.48	1.10	1.22
		10-8	63-8	4 TO 6	16	16	11	8	8	8	8	5	5	6	6	328	3-8	2-9	9-2	3-11	2-5	7.374	1843		1.83	2.38	2.08	2.21
	10	12-9	63-8	< 2	18	15	11	8	9	8	9	6	6	7	7	344	5-0	3-2	11-3	4-3	2-6	7.843	2335	7.407	1.06	1.37	1.05	1.13
		12-8	63-8	2 TO 4	16	16	11	7	8	7	8	5	5	6	6	344	3-8	2-9	11-2	3-11	2-5	7.646	1729		1.12	1.46	1.09	1.20
		12-8	63-8	4 TO 6	16	16	11	8	8	8	8	5	5	6	6	344	3-8	2-9	11-2	2-4	2-5	7.646	1878		1.87	2.43	2.05	2.18

HEADWALL AND TOEWALL QUANTITIES

HEADWALL BENT ANGLE	90° TO 75°			74° TO 60°			59° TO 45°		
CLEAR SPAN (S)	Z	STIRRUPS	REBAR QUANT.	Z	STIRRUPS	REBAR QUANT.	Z	STIRRUPS	REBAR QUANT.
	#	#	LBS/LF	#	#	LBS/LF	#	#	LBS/LF
8	4	4	19.2	5	4	23.5	7	4	34.4
10	5	4	23.9	6	4	28.7	9	4■	54.0
12	6	4	28.7	6	4	28.2	9	5■	59.2
14	6	4	27.9	7	4	33.5	★	★	★
16	6	4	27.5	8	5	44.1	★	★	★
18	7	4	33.0	9	5	51.8	★	★	★
20	7	4	32.8	★	★	★	★	★	★
CONCRETE QUANTITY = 0.086 CY/LF									

NOTES

■ 1. SIX INCH SPACING AT EACH END OF THE SPAN FOR A DISTANCE OF 1/4 OF THE SPAN LENGTH; 12 INCH SPACING ELSEWHERE.

2. QUANTITIES ARE GIVEN FOR ONE HEADWALL AND ONE TOEWALL AND ARE BASED ON PER LINEAR FOOT OF HEADWALL. STEEL QUANTITIES INCLUDE ALL REINFORCING. QUANTITIES SHALL BE PAID FOR AS SHOWN ON THE PLANS.

★ 3. SKEWED HEADWALLS ARE NOT RECOMMENDED FOR THESE SPANS. A SPECIAL DESIGN IS REQUIRED.

4. FOR HEADWALL AND TOEWALL DETAILS SEE M-601-3, SHEET 1 OF 2.

5. WHEN THE FILL HEIGHTS ARE LESS THAN OR EQUAL TO 2 FT, ALL REINFORCING BARS IN THE HEADWALL, ALL REINFORCING BARS DESIGNATED BY AN ASTERISK (*), AND THE d_1 BARS IN THE TOP MAT OF THE TOP SLAB SHALL BE EPOXY COATED.

6. REINFORCING QUANTITIES INCLUDE BOTH EPOXY-COATED AND UNCOATED BARS.

7. WHEN A (RISE) R OF LESS THAN 6 FT IS REQUIRED, USE THE BAR SIZES AND THE SLAB AND WALL THICKNESSES FOR THE 6 FT RISE (IF AVAILABLE ON THE TABLE).

▲ 8. FOR SIZE AND SPACING OF THE BOTTOM MAT BARS IN THE TOP SLAB SEE TABLE ON M-601-3, SHEET 1 OF 2. ALL OTHER d_1 BARS ARE #4's AT 1'-0" SPACING. THE NUMBER OF BARS REQUIRED IS LISTED ON THIS SHEET AND INCLUDES BOTH #4 BARS AND THOSE FROM THE TABLE.

◆ 9. LIVE LOAD IS NEGLECTED AS PER AASHTO LRFD SECTION 3.6.1.2.6. FOR THESE STRUCTURES REFER TO THE CDOT RATING MANUAL.

10. FOR ALL NEW CULVERT DESIGNS, A RATING IS REQUIRED. THE RATING SUMMARY SHEET SHOULD BE PRINTED FROM THE CDOT EXTERNAL WEBSITE AND SUBMITTED TO THE BRIDGE RATING UNIT OR INCLUDED AS PART OF A LARGER DESIGN PACKAGE. FOR ADDITIONAL INFORMATION, SEE THE CDOT RATING MANUAL.

Computer File Information
Creation Date: 07/04/12 Initials: JBE
Last Modification Date: 11/25/15 Initials: JBE
Full Path: www.codot.gov/business/designsupport
Drawing File Name: 601030202.dgn
CAD Ver.: MicroStation V8 Scale: Not to Scale Units: English

Sheet Revisions

	Date:	Comments
R-1	08/27/13	LRFD Design
R-2	08/01/15	Analysis Program Updates

Colorado Department of Transportation
4201 East Arkansas Avenue
CDOT HQ, 4th Floor
Denver, CO 80222
Phone: 303-757-9021 FAX: 303-757-9868
Division of Project Support DDG/Bridge

TRIPLE CONCRETE BOX CULVERT

Issued By: Project Development Branch July 4, 2012

STANDARD PLAN NO.
M-601-3