GENERAL NOTES

1. REFER TO ROADWAY PLANS FOR THE ACTUAL CONFIGURATION AND LOCATION OF TRAFFIC SIGNAL HEADS AND SIGNS MARKED WITH A ■ .
2. ALL POLES AND ARMS SHALL BE FABRICATED WITH ASTM A572 GRADE 65 STEEL. LUMINAIRE ARMS MAY BE FABRICATED WITH ASTM A595 GRADE A STEEL WITH A MINIMUM YIELD POINT OF 55 KSI.
3. ALL POLES AND ARMS SHALL COMPLY WITH THE DIMENSIONAL TOLERANCES SPECIFIED IN ASTM A500, A501, OR A595.
4. ALL POLES AND ARMS SHALL BE ROUND OR DODECAGONAL (12 SIDED) TUBES WITH A 0.14 IN/FT TAPER.
5. HARDENED WASHERS SHALL CONFORM TO ASTM F436.
6. ALL POLES AND ARMS SHALL BE GALVANIZED INSIDE AND OUTSIDE AFTER FABRICATION IN ACCORDANCE WITH ASTM A123, UNLESS PAINTING IS CALLED FOR ON THE PLANS. PAINTING SHALL CONFORM TO SECTION 522, DUPLEX COATING SYSTEM.
7. POLE AND MAST ARM SPLICES SHALL BE MECHANICALLY FORCED TOGETHER FOR A SNUG FIT.
8. BLIND BOLTS SHALL BE A307 GRADE A STEEL AND ARE NOT REQUIRED FOR MULTISIDED POLES. MECHANICAL ALTERNATIVES TO BLIND BOLTS UTILIZING FRICTION, KEYS, INTERLOCKING TEETH OR A COMBINATION THEREOF TO PREVENT THE BUILT-UP BOX FROM TWISTING ON THE POLE MAY BE USED AS APPROVED BY CDOT STAFF BRIDGE.
9. ALL MAST ARMS MORE THAN 40 FT IN LENGTH SHALL BE TWO PIECE CONSTRUCTION TO LIMIT ARM WEIGHTS.
10. GALVANIZED ASTM A325 H.S. BOLTS SHALL BE USED FOR ATTACHING LUMINAIRE AND MAST ARMS. A LUBRICATED TIGHTENING TORQUE OF 178 FT-LBS FOR ¾" DIAMETER BOLTS, 395 FT-LBS FOR 1" DIAMETER BOLTS AND 1300 FT-LBS FOR 1½" DIAMETER BOLTS SHALL BE USED TO TIGHTEN ALL H.S. BOLTS. MAST ARMS SHALL BE TEMPORARILY SUPPORTED TO TAKE LOAD OFF OF FIELD CONNECTIONS WHILE BOLTS ARE TIGHTENED IN ORDER TO FIRMLY SEAT THE FLANGE PLATE. BOLTS SHALL BE SEQUENTIALLY TIGHTENED. ASSUMING 12 BOLTS AND A CLOCK FACE, THE TIGHTENING SEQUENCE WOULD BE 12, 6, 1, 7, ETC. THIS PROCESS SHALL BE CONTINUED UNTIL NO LOOSE BOLTS ARE FOUND AFTER ALL BOLTS HAVE BEEN INITIALLY TIGHTENED.
11. CAST POLE END CAP TO BE SECURED IN PLACE WITH 3 SET SCREWS.
12. ALL SIGNAL HEADS, SIGNS, AND HARDWARE SHALL BE FIELD POSITIONED.
13. ACCESSORIES TO BE HOT DIP GALVANIZED IN ACCORDANCE WITH ASTM A153.
14. ALL PLATES AND STIFFENERS SHALL BE FABRICATED WITH AASHTO M270 (ASTM A709) GRADE 36 STEEL AND SHALL COMPLY WITH THE DIMENSIONAL TOLERANCES SPECIFIED IN ASTM A6. ALL HANDHOLES SHALL BE FABRICATED WITH ASTM A572 GRADE 42 STEEL.
15. LEVELING CONCRETE SHALL BE 3000 PSI AIR ENTRAINED CONCRETE VIBRATED IN PLACE BELOW THE POLE BASE PLATE.
16. THE DESIGNS HEREIN ASSUME THAT SIGNALS ARE INSTALLED WITHIN THE ROADWAY EARTHWORK PRISM WITH THE FOLLOWING SOIL PARAMETERS:
    SOIL DENSITY γ = 110 LB./CU.FT.
    SOIL COHESION = 750 LB./SQ.FT. FOR MEDIUM STIFF COHESIVE SOIL
    SOIL Ø ANGLE = 30° FOR MEDIUM DENSE COHESIONLESS SOIL
    SF = 1.5 FOR TORSIONAL RESISTANCE AND 3.0 FOR FLEXURAL RESISTANCE
17. CONTACT THE ENGINEER IF ANY OF THE FOLLOWING SOIL CONDITIONS ARE ENCOUNTERED DURING DRILLING:
    (A) SIGNALS WILL NOT BE INSTALLED WITHIN THE ROADWAY EARTHWORK PRISM.
    (B) THE SOIL HAS A HIGH ORGANIC CONTENT OR CONSISTS OF SATURATED SILT AND CLAY.
    (C) THE SITE WON'T SUPPORT THE WEIGHT OF THE DRILLING RIG.
    (D) THE FOUNDATION SOILS ARE NOT HOMOGENOUS.
    (E) FIRM BEDROCK IS ENCOUNTERED.
18. CAISSONS SHALL BE PLACED AGAINST UNDISTURBED EARTH. WET OR CAVING HOLES SHALL BE BACKFILLED WITH FLOW-FILL AND REDRILLED AFTER A THREE DAY CURING PERIOD WITHOUT THE USE OF A CASING.
19. CAISSONS SHALL BE CONSTRUCTED WITH AIR ENTRAINED CLASS BZ CONCRETE IN ACCORDANCE WITH SECTION 503 OF THE STANDARD SPECIFICATIONS. REINFORCING STEEL SHALL BE GRADE 60.
20. CAISSON CONCRETE MUST HAVE A MINIMUM COMPRESSIVE STRENGTH OF 2,700 PSI BEFORE INSTALLING THE SIGNAL STRUCTURE; VERIFY CONCRETE STRENGTH WITH MATURITY METER.
21. U-BOLTS AND ANCHOR BOLTS SHALL BE FABRICATED WITH AASHTO M314-90 GRADE 55 STEEL.
22. ANCHOR BOLTS SHALL BE FABRICATED WITH HEAVY HEX NUTS AND FLAT WASHERS, AND EXTENDED A MINIMUM OF ¾" ABOVE THE NUT AFTER COMPLETING THE TIGHTENING PROCESS. THREAD UPPER 12 INCHES AND GALVANIZE UPPER 13 INCHES OF THE ANCHOR BOLTS. FIELD WELDING OF ANCHOR BOLTS TO REBAR DURING ERECTION WILL NOT BE ALLOWED. ANCHOR BOLTS SHALL BE SET WITH A STEEL TEMPLATE UNTIL THE CONCRETE HAS CURED AT LEAST TWO DAYS. THE ANCHOR BOLTS SHALL BE TIGHTENED USING THE TURN-OF-NUT METHOD. THE BOLTS SHALL FIRST BE TIGHTENED TO SNUG TIGHT, WHICH IS DEFINED AS THE TIGHTNESS THAT EXISTS WHEN THE UPPER AND LOWER NUTS ARE IN FIRM CONTACT WITH THE BASE PLATE. WITH MAST ARMS FREE TO DEFLECT, THE UPPER AND LOWER NUTS SHALL THEN EACH BE ROTATED AN ADDITIONAL 1/12 TURN (30° ± °5) WITH A SLUGGING, HYDRAULIC OR AIR IMPACT WRENCH.
23. WELDING OF STEEL SHALL CONFORM TO THE REQUIREMENTS OF ANSI/AWS D1.1. ALL AREAS TO BE WELDED SHALL BE GROUND TO BRIGHT METAL. ALL WELDING AND REQUIRED TESTING SHALL BE COMPLETE BEFORE ANY MATERIAL IS GALVANIZED. ALL CIRCUMFERENTIAL AND STIFFENER WELDS SHALL BE NON-DESTRUCTIVELY TESTED USING THE ENHANCED MAGNETIC PARTICLE METHOD IN ACCORDANCE WITH SUBSECTION 509.18 (d) OF THE STANDARD SPECIFICATIONS. THE ACCEPTANCE CRITERIA IS STATED IN TABLE 6.1 OF ANSI/AWS D1.1. ALL LONGITUDINAL WELDS WITHIN 6 INCHES OF FULL PENETRATION CIRCUMFERENTIAL GROOVE WELDS AND FULL PENETRATION GROOVE WELDS SHALL BE INSPECTED AS SPECIFIED ABOVE. MAXIMUM WELD UNDERCUT SHALL BE 0.01 INCHES.
24. ALL ELECTRICAL CONNECTIONS TO THE SIGNALS SHALL BE GROUNDED IN ACORDANCE WITH APPLICABLE ELECTRICAL CODES.
25. TRAFFIC SIGNAL STRUCTURES HAVE BEEN DESIGNED IN ACCORDANCE WITH THE AASHTO STANDARD SPECIFICATIONS FOR STRUCTURAL SUPPORTS FOR HIGHWAY SIGNS, LUMINAIRES, AND TRAFFIC SIGNALS, FOURTH EDITION, 2001.
26. A DESIGN WIND VELOCITY OF 100 MPH AND ONE 12' LANE WITH A 65 MPH TRUCK INDUCED GUST LOADING HAVE BEEN USED FOR THE DESIGNS HEREIN.
27. CERTIFIED MILL TEST REPORTS INCLUDING CHARPY V-NOTCH TEST RESULTS, WELD INSPECTION REPORTS AND ENHANCED MAGNETIC PARTICLE TEST REPORTS SHALL BE SUBMITTED TO CDOT STAFF BRIDGE, 4201 E. ARKANSAS AVE. DENVER, COLORADO 80222 AS SOON AS THEY BECOME AVAILABLE. CVN TEST RESULTS FOR ASTM A572 GRADES 42 AND 65 STEEL SHALL HAVE A MINIMUM VALUE OF 15 FT-LBS AT 40°F AS PER THE H FREQUENCY TEST REQUIREMENTS IN AASHTO T243 (ASTM A673).
28. SHOP DRAWINGS SHALL BE SUBMITTED TO THE ENGINEER FOR REVIEW IN ACCORDANCE WITH SUBSECTION 105.02 OF THE STANDARD SPECIFICATIONS.
29. DEFINITIONS: U.O.N. = UNLESS OTHERWISE NOTED
    W.P. = WORK POINT
30. TRAFFIC SIGNALS MOUNTED ON MAST ARMS SHALL BE FURNISHED WITH ASTRO TYPE MOUNTING BRACKETS.
31. END SECTION DIAMETERS MUST BE INCREASED TO ACCOMMODATE OUT-OF-ROUNDNESS, GALVANIZING THICKNESS AND SEAM WELD PROFILES TO PROVIDE THE MINIMUM REQUIRED ARM SLIP SPLICE LENGTHS AND POLE MEMBER OVERLAPS.
32. USE 35' OF ⅜" HIGH STRENGTH CHAIN (SAFE WORKING LOAD OF 5,000 LB.), TWO "S" SHAPED HOOKS PROPERLY FORGED FROM 1" SQUARE BAR STOCK AND TWO 4,000 LB. CAPACITY COME-ALONGS TO SEAT THE POLE END SECTION ON ITS BASE SECTION BY ATTACHING THE COME-ALONGS TO OPPOSING ACCESS HOLES IN THE BUILT-UP BOX WITH THE "S" SHAPED HOOKS AND PULLING AGAINST THE CHAIN WHICH IS STRUNG UNDERNEATH THE POLE BASE PLATE. APPLY ENOUGH FORCE TO ALIGN THE WIRE ACCESS HOLES AND TO SEAT THE SLIP SPLICE WITHIN 4" OF THE SPECIFIED LENGTH.
33. SECURE ARM FLANGE PLATE, POLE BASE PLATE, AND CONNECTION FACEPLATE DURING WELDING TO PREVENT DISTORTION.
34. ONE DRILLED HOLE WITH A MAXIMUM DIAMETER OF ¾" IS ALLOWED AT LOCATIONS MARKED WITH A ▲ TO ACCOMMODATE ELECTRICAL WIRING.
35. SEE S-614-42 AND S-614-43 FOR "CABINET FOUNDATION DETAILS" AND "TRAFFIC LOOP AND MISC. SIGNAL DETAILS" RESPECTIVELY.

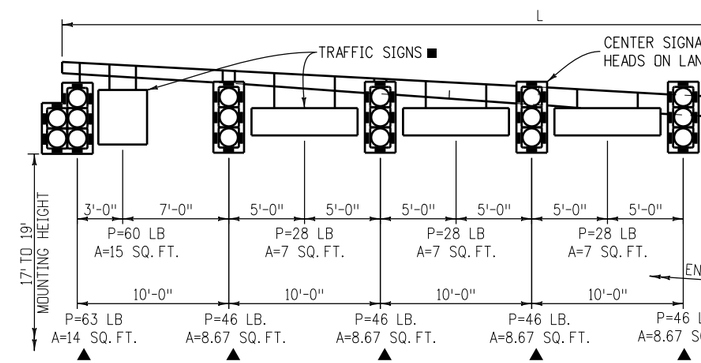

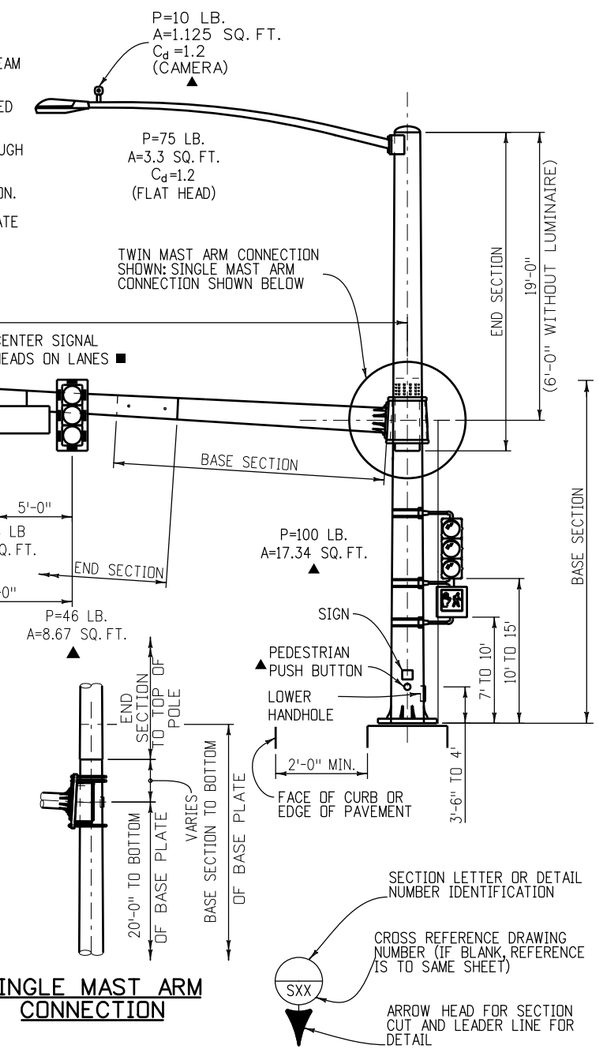

SINGLE MAST ARM CONNECTION

DESIGN DATA

1. DRAWING SHOWN HAS 5 SIGNAL HEADS, SHORTER ARM LENGTHS MAY HAVE FEWER HEADS. THIS CONFIGURATION IS INTENDED TO REPRESENT A WORST CASE LOADING CONDITION.

70', (75')	55', 60', (65')	45', (50')	35', (40')	25', (30')
5 SIGNAL HEADS	5 SIGNAL HEADS	4 SIGNAL HEADS	3 SIGNAL HEADS	2 SIGNAL HEADS

THE DESIGN LENGTH "L" FOR EACH SERIES IS SHOWN IN PARENTHESIS.

2. FOR THE TWIN MAST ARM CONNECTION, THE SECOND ARM IS ASSUMED TO BE WITHIN 60° TO 120° OF THE PRIMARY ARM AND IS ASSUMED TO BE LOADED WITH THE SAME LOADS AS SHOWN ABOVE. THE SECONDARY ARM MAY BE THE SAME LENGTH AS OR SHORTER THAN THE PRIMARY ARM.

Computer File Information	
Creation Date: 07-04-12	Initials: LAW
Last Modification Date: 07-04-12	Initials: LAW
Full Path: www.coloradodot.info/business/designsupport	
Drawing File Name: Sheet_S-614-40_1of5 Rev3.dgn	
CAD Ver.: MicroStation V8 Scale: Not to Scale Units: English	

	Sheet Revisions	
	Date:	Comments
R-1	03/20/15	ADD POLE SET BACK NOTES
R-2	07/01/15	REVISE NOTES 4 & 22
R-3	06/17/16	REVISE NOTE 20
R-X		

Colorado Department of Transportation
4201 East Arkansas Avenue
Denver, Colorado 80222
Phone: (303) 757-9543
Fax: (303) 757-9219
Safety & Traffic Engineering Branch

KCM/RLO

TYPICAL TRAFFIC SIGNAL INSTALLATION DETAILS

Issued By: Safety & Traffic Engineering Branch July 4, 2012

STANDARD PLAN NO.
S-614-40
Sheet No. 1 of 5

MAST ARM LENGTH (L) (FT.)	MAST ARM DATA								MAST ARM CONNECTION DATA															
	BASE SECTION *				END SECTION ◆				STIFFENER								FLANGE			BOLT				
	LENGTH (FT.)	TIP Ø (IN.)	TRUNK Ø (IN.)	THK. (IN.)	LENGTH (FT.)	TIP Ø (IN.)	TRUNK Ø (IN.)	THK. (IN.)	NO. OF	THK. (IN.)	WIDTH (IN.)	HEIGHT (IN.)	RADIUS (IN.)	ANGLE	WALL WELD (IN.)	PLATE WELD (IN.)	DIA. (IN.)	THK. (IN.)	SOCKET WELD (IN.)	NO. OF	DIA. (IN.)	CIRCLE DIA. (IN.)	HOLE DIA. (IN.)	ANGLE
30	29.25	6.50	10.59	0.1793	N.A.	N.A.	N.A.	N.A.	6	0.50	3.5	7	6.89	30.0°	0.179	0.375	20	1.00	0.179	6	1.0	16	1.125	60.0°
40	39.11	6.50	11.98	0.2391	N.A.	N.A.	N.A.	N.A.	8	0.50	4.0	8	8.12	22.5°	0.239	0.375	23	1.25	0.239	8	1.5	17	1.625	45.0°
50	25.15	9.47	12.99	0.3125	25	6.50	10.00	0.1793	8	0.75	4.0	8	8.12	22.5°	0.250	0.625	24	1.50	0.250	8	1.5	18	1.625	45.0°
65	25.35	12.52	16.07	0.3125	40	7.50	13.10	0.1793	8	0.75	5.0	10	10.60	22.5°	0.250	0.625	29	1.75	0.250	8	1.5	23	1.625	45.0°
75	35.23	12.52	17.45	0.3125	40	7.50	13.10	0.1793	10	0.75	5.5	11	11.84	18.0°	0.250	0.625	31	1.75	0.250	10	1.5	25	1.625	36.0°

* BASE SECTION LENGTH INCLUDES THE SPLICE LENGTH AS PER THE "MAST ARM SLIP SPLICE DETAIL" BELOW.
◆ SEE GENERAL NOTE 31 ON SHEET 1 OF 5.
■ STOP ALL WELDS 1/2" SHORT OF PLATE EDGES AND BOLT HOLES.
● 3 3/4" FOR 30' ARM UPPER HANDHOLE.

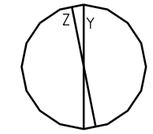

Y = DIAMETER OF A ROUND TUBE.
Z = PERPENDICULAR DISTANCE BETWEEN FLATS.
Y AND Z ARE OUTSIDE DIAMETER DIMENSIONS.
Z/Y RATIO MUST BE .98 MINIMUM.

OPTIONAL MULTI-SIDED POLE OR MAST ARM

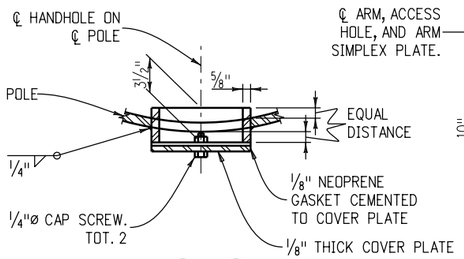

SECTION E/S4 E/S5

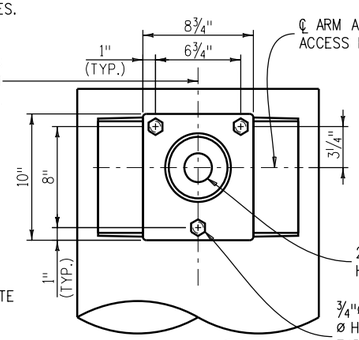

SECTION B

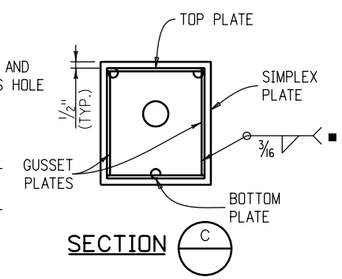

SECTION C

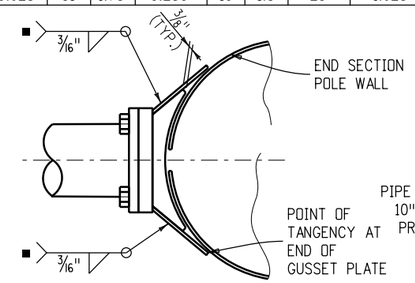

(TYPICAL TOP AND BOTTOM PLATES)

SECTION A

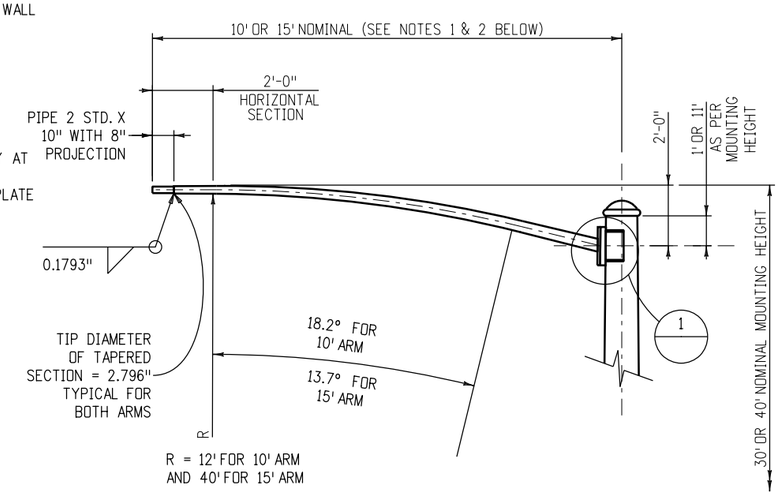

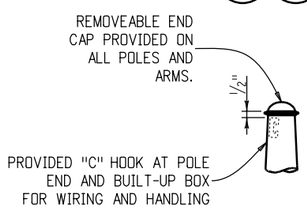

END CAP DETAIL

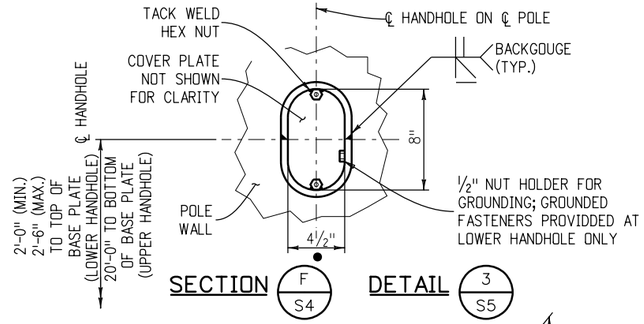

SECTION F/S4

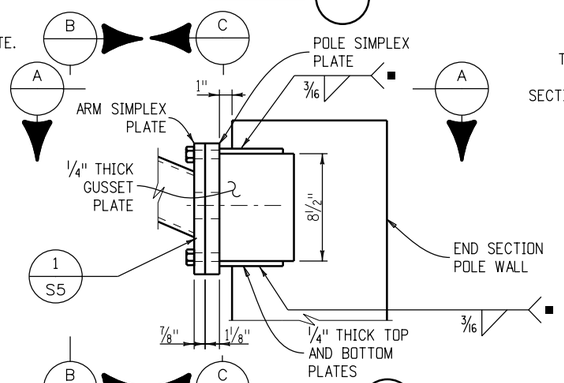

DETAIL 3/S5

DETAIL 1

LUMINAIRE ARM NOTES

1. 10' LUMINAIRE ARM SHAFT: WALL THICKNESS = 0.1793"; LINEAR TAPER = 0.14 IN./FT.; DIAMETER AT ARM SIMPLEX PLATE = 4.066"
2. 15' LUMINAIRE ARM SHAFT: WALL THICKNESS = 0.1793"; LINEAR TAPER = 0.14 IN./FT.; DIAMETER AT ARM SIMPLEX PLATE = 4.679".

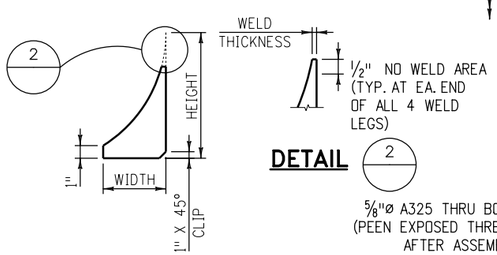

DETAIL 2

STIFFENER DETAIL

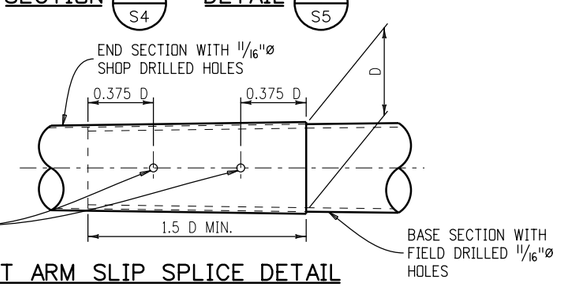

MAST ARM SLIP SPLICE DETAIL

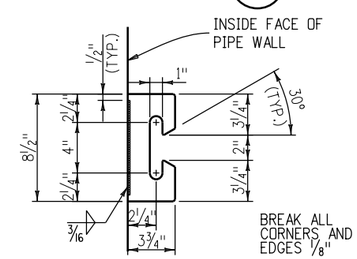

"C" HOOK DETAIL

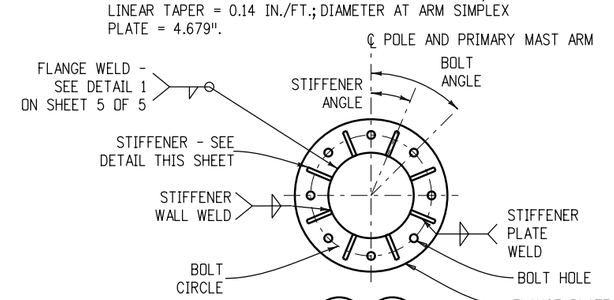

SECTION D/S3 D/S4 (BOLTS NOT SHOWN FOR CLARITY)

Computer File Information		
Creation Date: 07-04-12	Initials: LAW	
Last Modification Date: 07-04-12	Initials: LAW	R-X
Full Path: www.coloradodot.info/business/designsupport		R-X
Drawing File Name: Sheet_S-614-40_2of5.dgn		R-X
CAD Ver.: MicroStation V8 Scale: Not to Scale Units: English		R-X

Sheet Revisions	
Date:	Comments

Colorado Department of Transportation
4201 East Arkansas Avenue
Denver, Colorado 80222
Phone: (303) 757-9543
Fax: (303) 757-9219
Safety & Traffic Engineering Branch KCM/RLO

TYPICAL TRAFFIC SIGNAL INSTALLATION DETAILS

Issued By: Safety & Traffic Engineering Branch July 4, 2012

STANDARD PLAN NO.

S-614-40

MAST ARM LENGTH (FT.)	BUND BOLD DATA				BUILT-UP BOX DATA *					POLE DATA							
							SIDE PLATE	TOP PLATE	BOTTOM PLATE	BASE SECTION				END SECTION ◆ WITH LUMINAIRE			
	NO. OF	DIA. (IN.)	BOLTS PER ROW	NO. OF ROWS	THICKNESS OF BOX PLATES U.O.N. (IN.)	POLE WELD (IN.)	H (IN.)	WIDTH FOR θ = 45° (IN.)	WIDTH FOR θ = 45° (IN.)	LENGTH (FT.)	TOP Ø (IN.)	BOTTOM Ø (IN.)	THK. (IN.)	LENGTH (FT.)	TOP Ø (IN.)	BOTTOM Ø (IN.)	THK. (IN.)
30	24	0.75	6	4	1.50	0.1875	22	23.75	26.053	22.29	9.11	12.23	0.3125	20.54	7.25	10.13	0.2391
40	30	0.75	6	5	2.00	0.1875	25	26.75	29.367	22.67	11.81	14.98	0.3125	20.71	10.00	12.90	0.2391
50	36	0.75	12	3	2.50	0.1875	26	27.75	30.471	22.33	14.86	17.98	0.3125	20.79	13.00	15.91	0.2391
65	48	0.75	12	4	2.75	0.1875	31	32.75	35.995	22.77	18.54	21.73	0.3125	21.02	16.75	19.69	0.2391
75	60	0.75	12	5	3.00	0.1875	33	34.75	38.204	23.08	20.75	23.98	0.3125	21.12	19.00	21.96	0.2391

* USE LARGER ARM IN A DOUBLE ARM SIGNAL TO DETERMINE PLATE THICKNESS AND DIMENSIONS.
◆ SEE GENERAL NOTE 31 ON SHEET 1 OF 5

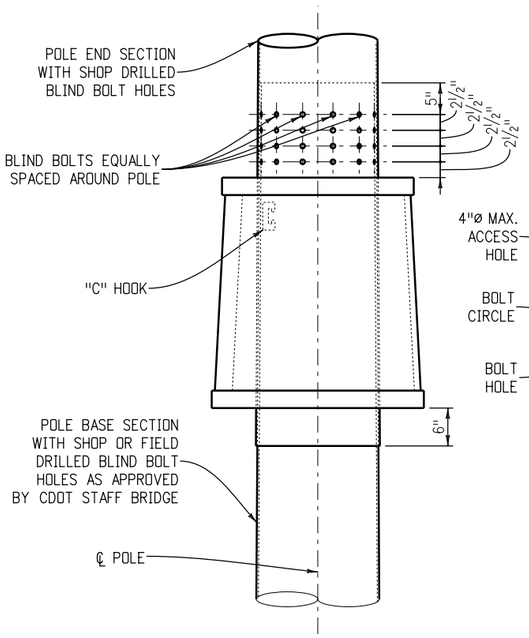

POLE END SECTION
SLIP CONNECTION DETAIL

(SEE GENERAL NOTE 8 ON SHEET 1 OF 5 REGARDING THE NEED FOR BLIND BOLTS)

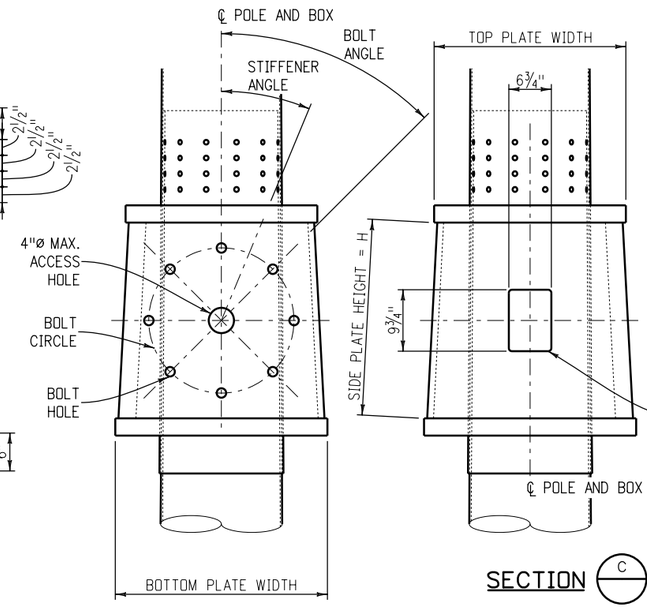

SECTION B

FOR 8 BOLTS AND θ < 45°, ROTATE FLANGE FOR SECONDARY ARM 22.5° TO AVOID BOLT INTERFERENCE PROBLEMS.

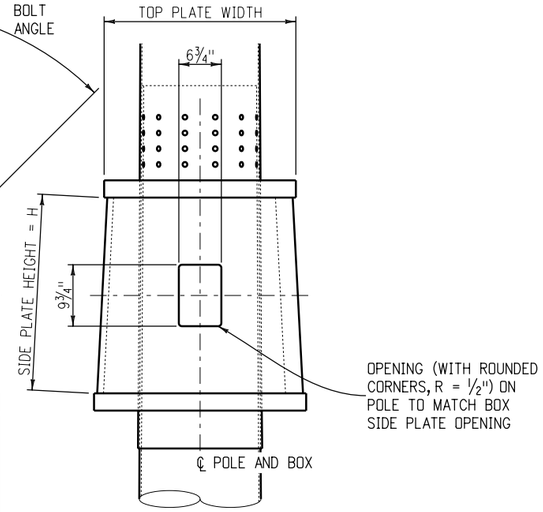

SECTION C

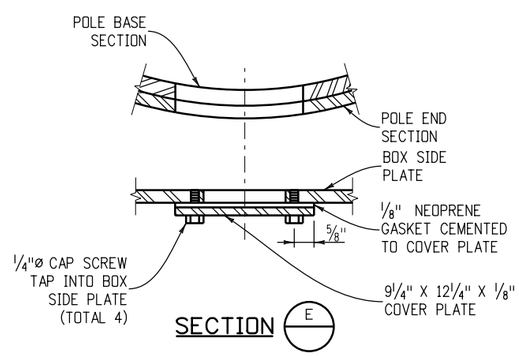

SECTION E

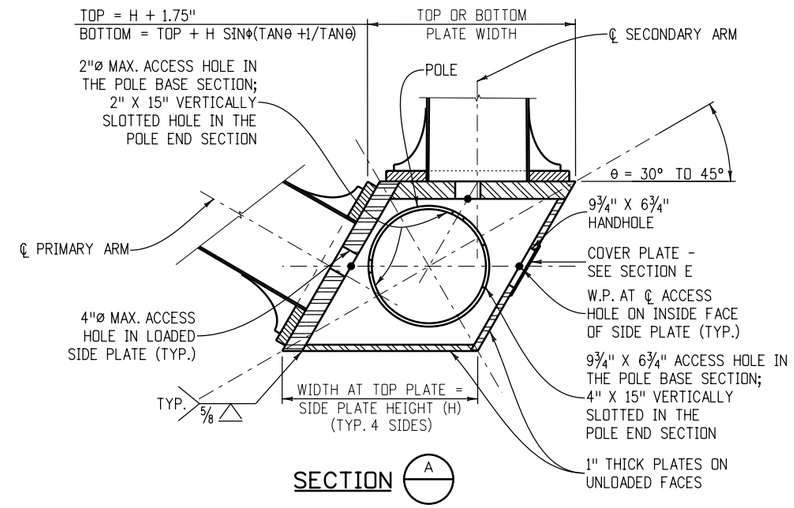

SECTION A

DRAWN WITH θ = 30°

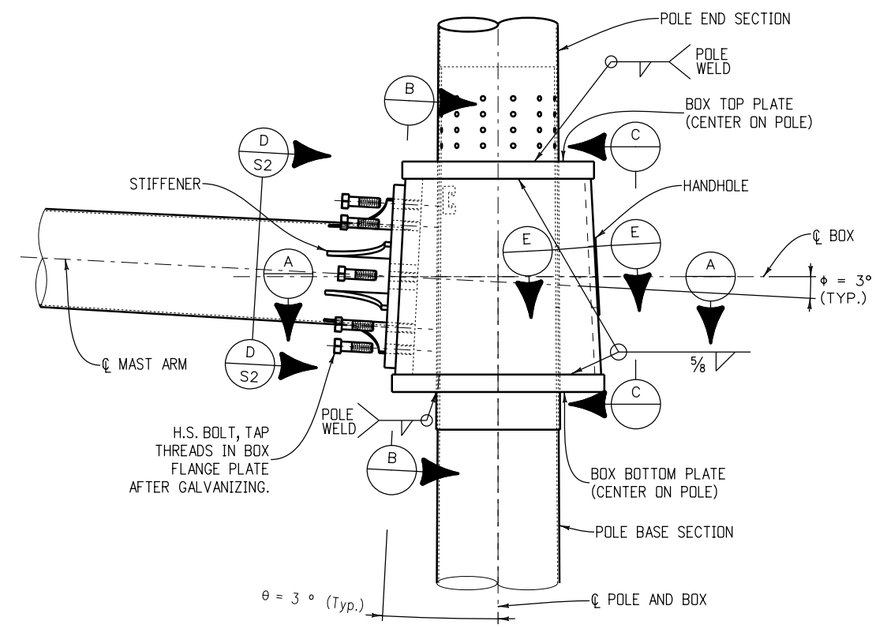

MAST ARM CONNECTION DETAIL

Computer File Information		
Creation Date: 07-04-12	Initials: LAW	
Last Modification Date: 07-04-12	Initials: LAW	R-X
Full Path: www.coloradodot.info/business/designsupport		R-X
Drawing File Name: Sheet_S-614-40_3of5.dgn		R-X
CAD Ver.: MicroStation V8 Scale: Not to Scale Units: English		R-X

Sheet Revisions	
Date:	Comments

Colorado Department of Transportation
4201 East Arkansas Avenue
Denver, Colorado 80222
Phone: (303) 757-9543
Fax: (303) 757-9219
Safety & Traffic Engineering Branch KCM/RLO

TYPICAL TRAFFIC SIGNAL INSTALLATION DETAILS

Issued By: Safety & Traffic Engineering Branch July 4, 2012

STANDARD PLAN NO.

S-614-40

MAST ARM LENGTH (FT.)	FACEPLATE DATA								STOP BAR DATA	SIDE PLATE DATA		WASHER DATA			U-BOLT DATA ●			
	FACEPLATE HEIGHTS			THICKNESS OF FACEPLATE	WIDTH OF FACEPLATE		RADIUS	EDGE DISTANCE	BAR LENGTH	THICKNESS OF SIDE PLATE	EAR HEIGHT	LENGTH OF WASHER	WIDTH OF WASHER	BOLT SPACING	DIAMETER OF U-BOLT	BEND RADIUS U-BOLT (A)	BEND RADIUS U-BOLT (B)	DIAMETER OF OVERSIZED HOLE
	TOP (H_{TOP}) (IN.)	BOTTOM (H_{BOTTOM}) (IN.)	TOTAL (H_{FACE}) (IN.)	(T_{FACE}) (IN.)	ENDS (W_E) (IN.)	CENTER (W_C) (IN.)	(IN.)	(S_{EDGE}) (IN.)	(L_{BAR}) (IN.)	(T_{SP}) (IN.)	(H_{EAR}) (IN.)	(L_{WASHER}) (IN.)	(W_{WASHER}) (IN.)	(S_{BOLT}) (IN.)	(D_{U-BOLT}) (IN.)	(IN.)	(IN.)	(IN.)
30	17.72	15.09	32.81	1.500	14.73	20.00	52.40	2.125	18.000	0.875	1.000	7.000	3.00	4.000	0.875	5.09	5.23	1.188
40	18.47	15.72	34.19	1.750	17.74	23.00	56.85	2.125	19.000	1.000	1.125	7.000	3.00	4.000	1.125	6.58	6.73	1.438
50	20.78	17.78	38.56	2.125	20.89	24.00	120.22	2.125	23.000	1.000	1.375	7.000	3.00	4.000	1.250	8.13	8.31	1.563
65	24.91	20.91	45.81	2.375	25.67	29.00	158.58	2.563	28.000	1.125	1.500	8.500	3.50	5.000	1.375	10.05	10.26	1.688
75	26.59	22.59	49.19	2.500	28.07	31.00	207.07	2.563	31.000	1.125	1.625	8.500	3.50	5.000	1.500	11.23	11.46	1.813

MAST ARM LENGTH (FT.)	POLE DATA								SADDLE DATA
	BASE SECTION ✶				END SECTION WITH LUMINAIRE ◆				THICKNESS OF SADDLE PLATES
	LENGTH (FT.)	TOP Ø (IN.)	BOTTOM Ø (IN.)	THK. (IN.)	LENGTH (FT.)	TOP Ø (IN.)	BOTTOM Ø (IN.)	THK (IN.)	(T_{SA}) (IN.)
30	24.55	8.79	12.23	0.3125	15.57	7.25	9.43	0.2391	1.375
40	24.96	11.49	14.98	0.3125	15.51	10.00	12.17	0.2391	1.375
50	25.54	14.40	17.98	0.3125	15.30	13.00	15.14	0.2391	1.375
65	26.30	18.05	21.73	0.3125	14.99	16.75	18.85	0.2391	1.500
75	26.74	20.24	23.98	0.3125	14.83	19.00	21.07	0.2391	1.625

● BEND RADIUS MEASURED TO THE ℄ OF EACH U-BOLT. INCREASE RADII AS NEEDED TO ACCOMMODATE OUT-OF-ROUNDNESS, GALVANIZING THICKNESS AND SEAM WELD PROFILES. U-BOLTS SHALL BE TIGHTENED 1/12 TURN (30° ±5°) PAST SNUG TIGHT; PEEN THREADS AFTER TIGHTENING. U-BOLTS AND FACEPLATE SHALL BE MOUNTED ON BASE SECTION PRIOR TO SHIPMENT.

✚ MATCH FIT STOP BAR TO SIDE PLATE USING TACK WELDS TO ENSURE UNIFORM BEARING.

✶ BASE SECTION LENGTHS INCLUDE THE SPLICE LENGTH AS PER THE "MAST ARM SLIP SPLICE DETAIL" ON SHEET 2 OF 5.

◆ SEE GENERAL NOTE 31 ON SHEET 1 OF 5.

■ END ALL WELDS 1/2 IN. SHORT OF BOLT HOLE AND PLATE EDGES.

▼ BEND STOP BAR TO MATCH POLE CURVATURE.

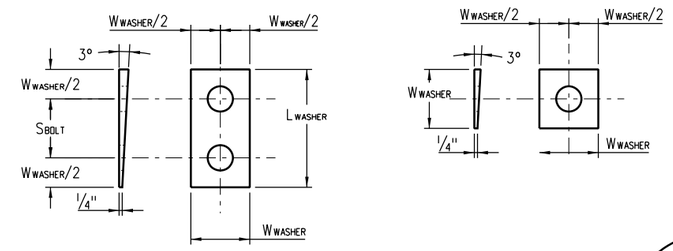

TAPERED WASHER DETAILS

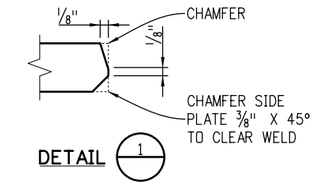

DETAIL 1

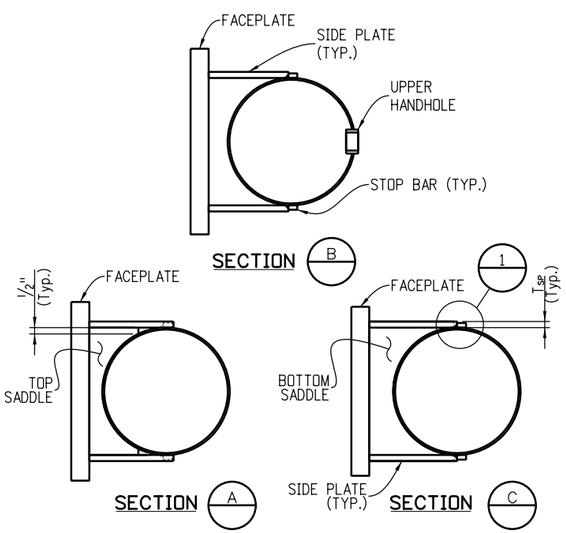

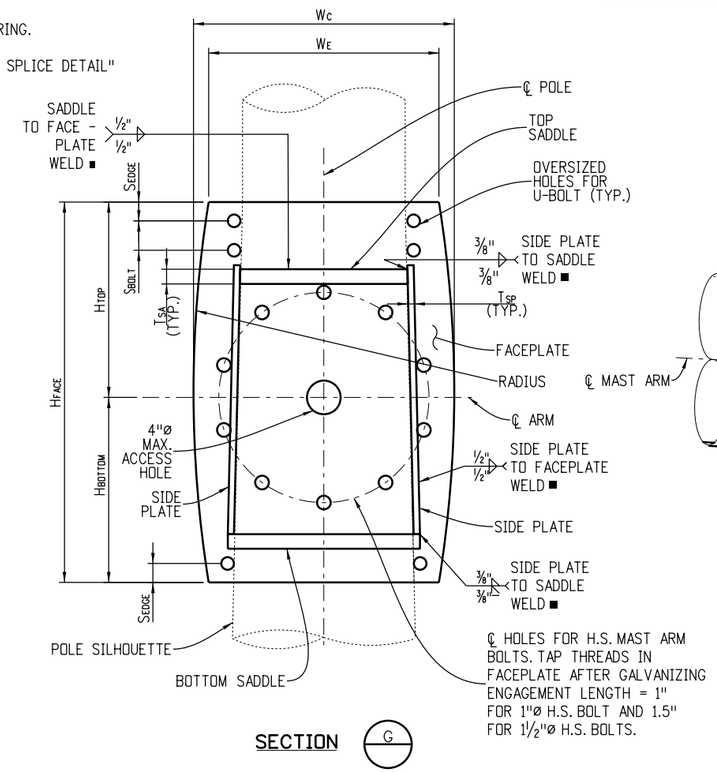

SECTION G

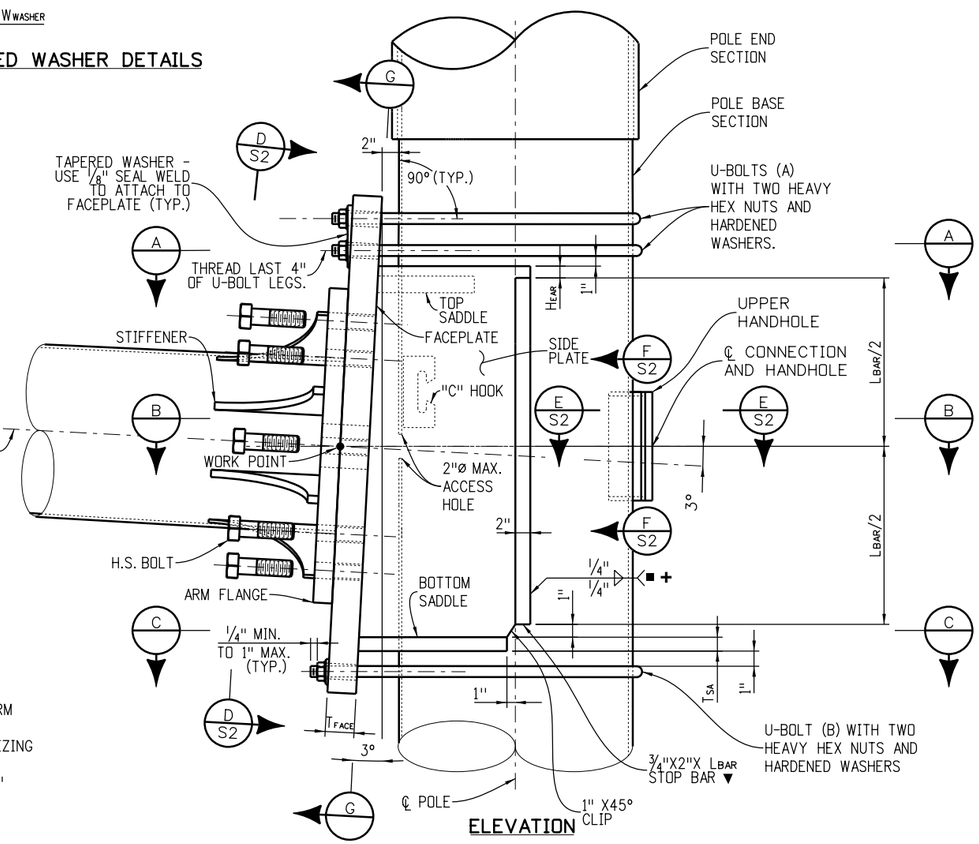

ELEVATION

Computer File Information		
Creation Date: 07-04-12	Initials: LAW	
Last Modification Date: 07-04-12	Initials: LAW	R-X
Full Path: www.coloradodot.info/business/designsupport		R-X
Drawing File Name: Sheet_ S-614-40 4 OF5.dgn		R-X
CAD Ver.: MicroStation V8 Scale: Not to Scale Units: English		R-X

Sheet Revisions	
Date:	Comments

Colorado Department of Transportation
4201 East Arkansas Avenue
Denver, Colorado 80222
Phone: (303) 757-9543
Fax: (303) 757-9219
Safety & Traffic Engineering Branch KCM/RLO

TYPICAL TRAFFIC SIGNAL INSTALLATION DETAILS

Issued By: Safety & Traffic Engineering Branch July 4, 2012

STANDARD PLAN NO.

S-614-40

Sheet No. 4 of 5

MAST ARM LENGTH (FT.)	POLE BASE CONNECTION DATA																	CAISSON DATA (FOR SINGLE AND DOUBLE ARM INSTALLATIONS)				
	STIFFENER								BASE PLATE		ANCHOR BOLT										V BARS	
	NO. OF	THK. (IN.)	WIDTH (IN.)	HEIGHT (IN.)	RADIUS (IN.)	ANGLE	WALL WELD (IN.)	PLATE WELD (IN.)	DIA. (IN.)	THK. (IN.)	NO. OF	DIA. (IN.)	LENGTH (IN.)	CIRCLE DIA. (IN.)	HOLE DIA. (IN.)	ANGLE	PROJECTION (IN.)	DIA. (IN.)	DEPTH (D) (FT.)	PAY LENGTH (L) (FT.)	SIZE	TOTAL
30	6	0.75	5.0	10	10.600	30.0°	0.25	0.625	24	2.25	6	2.0	63	17.75	2.25	60.0°	11.25	36	12.5	13	#9	11
40	6	0.75	5.5	11	11.841	30.0°	0.25	0.625	27	2.50	6	2.0	63	21.00	2.25	60.0°	11.50	36	14.5	15	#9	11
50	6	0.75	6.5	13	14.327	30.0°	0.25	0.625	32	2.75	6	2.0	63	25.00	2.25	60.0°	11.75	42	16.5	17	#9	14
65	6	0.75	8.0	16	18.063	30.0°	0.25	0.625	39	3.00	6	2.5	63	30.25	2.75	60.0°	12.50	48	20.5	21	#9	18
75	6	0.75	8.5	17	19.309	30.0°	0.25	0.625	42	3.25	6	2.5	63	33.00	2.75	60.0°	12.75	54	20.5	21	#9	23

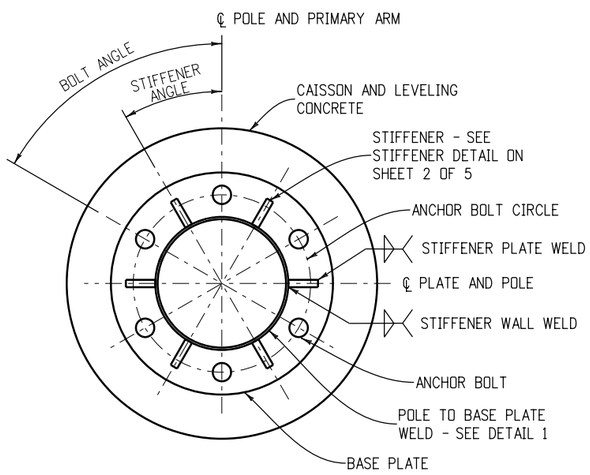

SECTION A

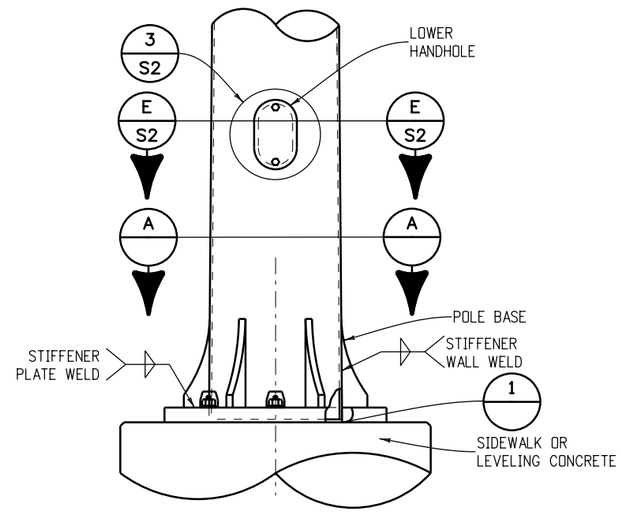

BASE PLATE DETAIL

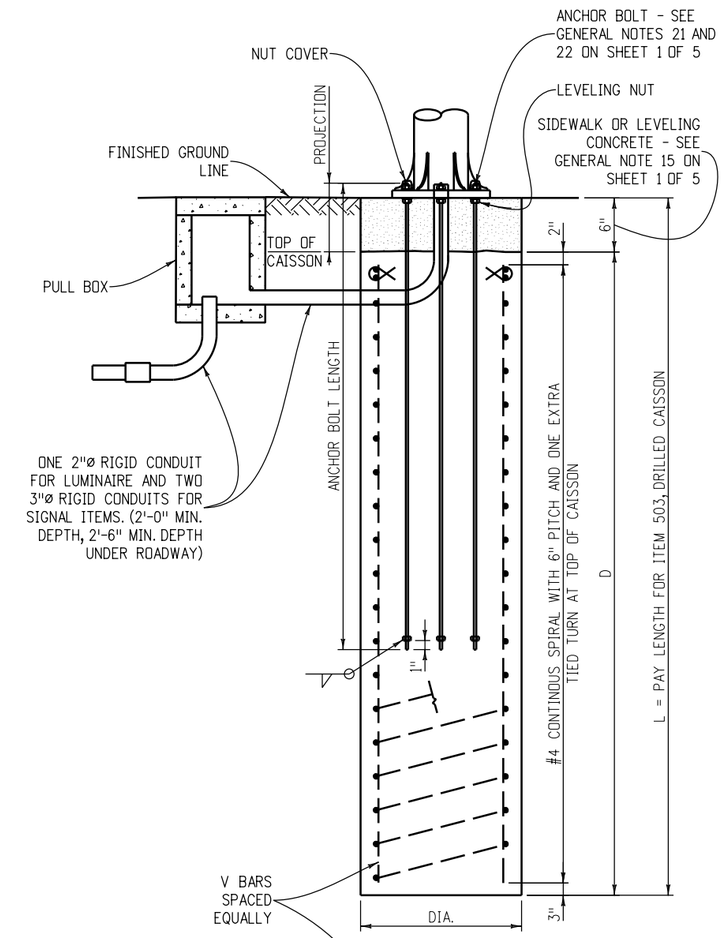

TRAFFIC SIGNAL POLE CAISSON

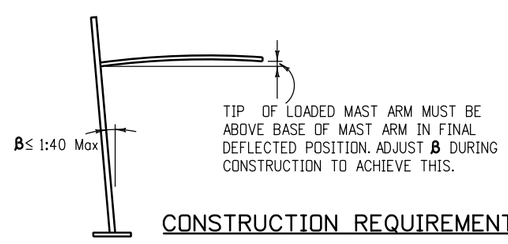

CONSTRUCTION REQUIREMENTS

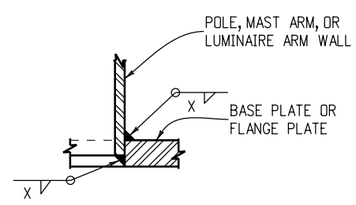

SOCKET WELD

X = 3/16" FOR LUMINAIRE ARMS AND 1/4" FOR POLES. SEE TABLE ON SHEET 2 OF 5 FOR MAST ARMS.

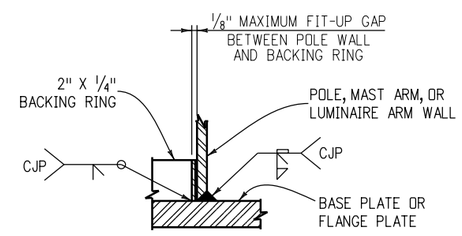

BACKING RING WELD

DETAIL 1 / 1 S2

Computer File Information		Sheet Revisions	
Creation Date: 07-04-12 Initials: LAW		Date:	Comments
Last Modification Date: 07-04-12 Initials: LAW	R-X		
Full Path: www.coloradodot.info/business/designsupport	R-X		
Drawing File Name: Sheet_S-614-40_5of5.dgn	R-X		
CAD Ver.: MicroStation V8 Scale: Not to Scale Units: English	R-X		

Colorado Department of Transportation
4201 East Arkansas Avenue
Denver, Colorado 80222
Phone: (303) 757-9543
Fax: (303) 757-9219
Safety & Traffic Engineering Branch KCM/RLO

TYPICAL TRAFFIC SIGNAL INSTALLATION DETAILS

Issued By: Safety & Traffic Engineering Branch July 4, 2012

STANDARD PLAN NO.

S-614-40

Sheet No. 5 of 5