## TUBULAR STEEL POSTS
## (SOCKET SYSTEM) (FOR USE WITH ALL P-POST INSTALLATIONS)
## (SEE SHEET 2 FOR P1 AND P2 POST INSTALLATIONS)

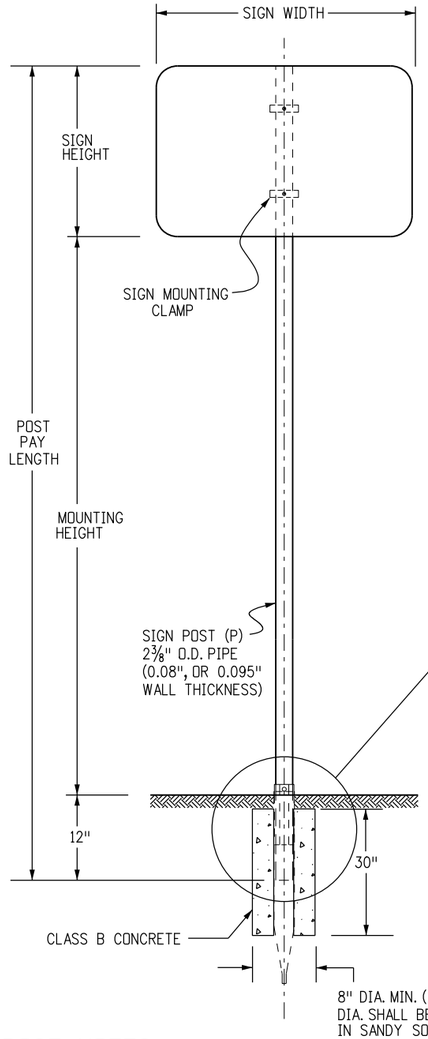


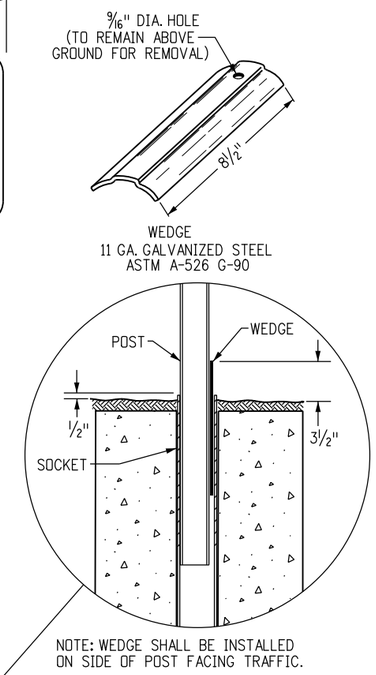


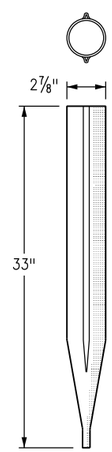


TUBULAR CONCRETE FOOTING
12 GA. GALVANIZED
STEEL ASTM - 787

## POST NOTES

THE POST MAY BE PRE-PUNCHED WITH ⅜" DIA. HOLES AND THE SIGN MOUNTED DIRECTLY TO THE POST, OR AN APPROVED MOUNTING CLAMP MAY BE USED TO MOUNT THE SIGN TO THE POST. IF THE POST IS PRE-PUNCHED, THE HOLES SHALL BE SPACED THE FOLLOWING DISTANCES FROM THE TOP:

1", 3", 10", 16", 21", 23", 24", 27", 33", 37", 39", AND 45"

## SIGNPOST SELECTION GUIDE (90 MPH WIND LOAD DESIGN)
## (FOR SOCKET SYSTEM AND SLIPBASE INSTALLATIONS USING P, P1 OR P2 POSTS)

**7' MOUNTING HEIGHT**

| SIGN HEIGHT (FT) \ SIGN WIDTH (FT) | 1 | 2 | 2.5 | 3 | 4 | 5 | 6 | 7 | 8 | 9 |
|---|---|---|---|---|---|---|---|---|---|---|
| 1 | P | P | P | P | P | P1 | SIZES NOT USED | | | |
| 2 | P | P | P | P | P | P1 | TWO P1'S | | | |
| 2.5 | P | P | P | P | P1 | P1 | | | | |
| 3 | P | P | P | P1 | P1 | P1 | | | | |
| 4 | P | P1 | P1 | P1 | P1 | P1 | | | | |
| 5 | SIZES NOT USED | | P1 | P1 | P1 | P1 | | | | |
| 6 | | | P1 | P1 | P1 | ▼P2 | | | TWO P2'S | |
| 7 | | | P1 | P1 | ▼P2 | TWO P1'S | | TWO P2'S | SIZE NOT USED | |

▼ SEE CHART NOTE 4.

**8' MOUNTING HEIGHT**

| SIGN HEIGHT (FT) \ SIGN WIDTH (FT) | 1 | 2 | 2.5 | 3 | 4 | 5 | 6 | 7 | 8 | 9 |
|---|---|---|---|---|---|---|---|---|---|---|
| 1 | P | P | P | P | P | P1 | SIZES NOT USED | | | |
| 2 | P | P | P | P | P1 | P1 | TWO P1'S | | | |
| 2.5 | P | P | P | P1 | P1 | P1 | | | | |
| 3 | P | P | P1 | P1 | P1 | P1 | | | | |
| 4 | P | P1 | P1 | P1 | P1 | P1 | | | | |
| 5 | SIZES NOT USED | | P1 | P1 | P1 | ▼P2 | | | | |
| 6 | | | P1 | P1 | P1 | ▼P2 | | | TWO P2'S | |
| 7 | | | P1 | P1 | TWO P1'S | TWO P1'S | | TWO P2'S | SIZES NOT USED | |

**9' MOUNTING HEIGHT**

| SIGN HEIGHT (FT) \ SIGN WIDTH (FT) | 1 | 2 | 2.5 | 3 | 4 | 5 | 6 | 7 | 8 | 9 |
|---|---|---|---|---|---|---|---|---|---|---|
| 1 | P | P | P | P | P | P1 | SIZES NOT USED | | | |
| 2 | P | P | P | P | P1 | P1 | TWO P1'S | | | |
| 2.5 | P | P | P | P1 | P1 | P1 | | | | |
| 3 | P | P | P1 | P1 | P1 | P1 | | | | |
| 4 | P | P1 | P1 | P1 | P1 | P1 | | | | |
| 5 | SIZES NOT USED | | P1 | P1 | P1 | ▼P2 | | | | TWO P2'S |
| 6 | | | P1 | P1 | ▼P2 | TWO P1'S | | | TWO P2'S | |
| 7 | | | P1 | P2 | TWO P1'S | TWO P1'S | | TWO P2'S | SIZES NOT USED | |

## CHART NOTES

1. TYPICAL POST MOUNTING HEIGHTS FROM GROUND TO BOTTOM OF SIGN PANEL ARE 7, 8 OR 9 FEET. OTHER HEIGHTS MAY BE REQUIRED WHEN SIGNS ARE MOUNTED ON STEEPER FILL OR CUT SLOPES.
2. FOR SIGNS MOUNTED ON TWO POSTS, THE MINIMUM DISTANCE BETWEEN POSTS SHALL BE 2 FEET AND THE MAXIMUM DISTANCE SHALL BE 8 FEET. DISTANCE FROM POST TO EDGE OF SIGN PANEL(S) SHALL BE 0 TO 4 INCHES. WHEN BACKING ZEES ARE USED, POSTS SHALL BE INSTALLED WITH A MINIMUM OF 2 INCHES TO THE EDGE OF THE BACKING ZEE.
3. ALL SIGN PANELS GREATER THAN 60 INCHES IN WIDTH MUST BE MOUNTED ON TWO POSTS TO PREVENT TURNING.
4. THE POST SIZES SHOWN ARE THE MINIMUM SIZES REQUIRED. TWO P1 POSTS MAY BE SUBSTITUTED WHERE ONE P2 POST IS INDICATED. P2 POSTS MAY SUBSTITUTED FOR P1 POSTS WHEN DIRECTED BY THE ENGINEER.

## GENERAL NOTES

1. SIGNS BETWEEN 37 IN. AND 60 IN. WIDTH WITH ONE POST INSTALLATION REQUIRE A T OR U SIGN SUPPORT BRACKET IN ADDITION TO THE BACKING ZEE REQUIREMENTS. WHEN DIRECTED BY THE ENGINEER, SIGN PANELS LESS THAN 48 IN. IN WIDTH MAY ATTACHED DIRECTLY TO T OR U BRACKETS WITHOUT ZEES.
2. U-BRACKETS MAY BE USED FOR MULTIPLE SIGN INSTALLATIONS.
3. FOR BACKING ZEE REQUIREMENTS AND DETAILS, SEE STANDARD PLANS S-614-3 AND S-614-4.

## POST SPECIFICATIONS

| POST SIZE | OUTSIDE DIAMETER | WALL THICKNESS | MATERIAL | **COATING | MAX ALLOW MOMENT | PAID FOR AS: |
|---|---|---|---|---|---|---|
| P | 2.375" | .080" | ASTM-513 | ASTM A-653 G-210 WITH 3.0 MIL POLYMER COATING PER ASTM A123 CLEAR COATING | 1.47 KIP FT | STEEL SIGN SUPPORT (2 INCH ROUND) |
| P1 | 2.875" | .160" | ASTM-513 | | 4.02 KIP FT | STEEL SIGN SUPPORT (2½ INCH ROUND NP-40) |
| P2 | 2.875" | .276" | ASTM-500 | GC HOT DIPPED PER ASTM-123 | 5.13 KIP FT | STEEL SIGN SUPPORT (2½ INCH ROUND SCH 80) |

** COLOR POWDER COATING MAY BE ADDED ACCORDING TO MANUFACTURER SPECIFICATIONS FOR SPECIAL LOCATIONS WHEN SHOWN ON THE PLANS.

| Computer File Information | |
|---|---|
| Creation Date: 07/04/12 | Initials: KEN |
| Last Modification Date: 08/05/16 | Initials: NNC |
| Full Path: www.coloradodot.info/library/traffic/traffic-s-standard-plans | |
| Drawing File Name: S-614-08.dgn | |
| CAD Ver.: MicroStation V8i Scale: Not to Scale | Units: English |

| | Sheet Revisions | |
|---|---|---|
| | Date: | Comments |
| R-1 | 03/05/13 | SHTS 1 & 2 - UPDATED DETAIL TITLES |
| R-2 | 10/23/14 | SHT 2 - MOVED SLIPBASE DETAILS TO SHEET 3, AND ADDED 4" BASE PLATE DETAIL TO NEW SHEET 3 |
| | | |
| | | |


Colorado Department of Transportation
4201 East Arkansas Avenue
Denver, Colorado 80222
Phone: 303-757-9543 FAX: 303-757-9219
Safety & Traffic Engineering KCM


# TUBULAR STEEL SIGN SUPPORT DETAILS

Issued By: Safety & Traffic Engineering Branch July 4, 2012

STANDARD PLAN NO.
S-614-8

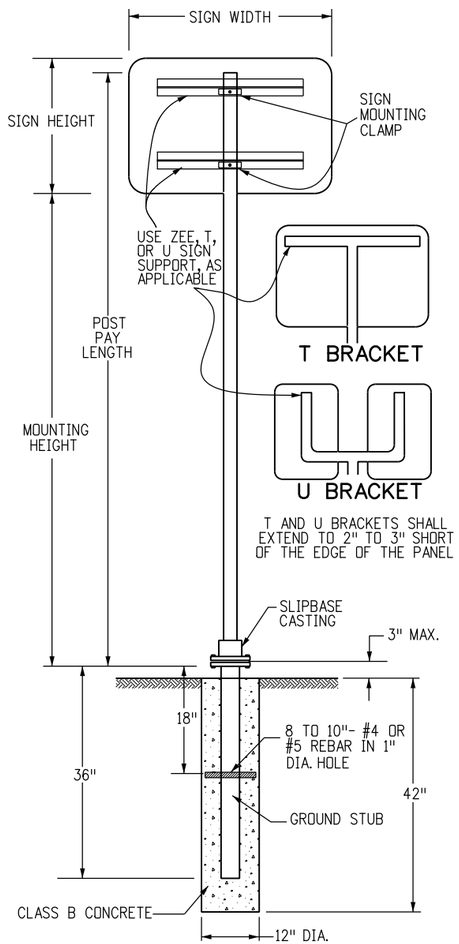


## TUBULAR STEEL POST (WITH SLIPBASE) (FOR USE WITH ALL P1 AND P2 POST INSTALLATIONS) (SEE SHEET 1 FOR P-POST INSTALLATIONS)

### GENERAL NOTE

THE CONTRACTOR SHALL INSTALL THE POSTS PER THE MANUFACTURER'S RECOMMENDATIONS WITHOUT ADDITIONAL COMPENSATION.

## DIMENSIONS FOR MOUNTING CLAMP (ALL DIMENSION ARE IN INCHES)

| STANDARD PIPE SIZE | A | B | C | D | E | F | G | K | L | $R_1$ | $R_2$ |
|---|---|---|---|---|---|---|---|---|---|---|---|
| 2 | 3 3/4 | 2 3/4 | 1 1/2 | 1 1/8 | 1/2 | 3/16 | 1 | 2 11/16 | 1 7/32 | 1 1/4 | 1 3/16 |
| 2 1/2 | 4 1/4 | 3 1/4 | 2 | 1 1/4 | 1/2 | 1/4 | 1 | 3 3/16 | 1 15/32 | 1 1/2 | 1 7/16 |

### T AND U BRACKET ATTACHMENT

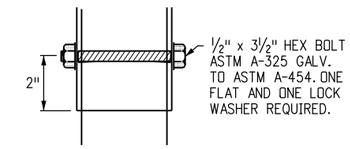


### TYPICAL SINGLE BRACKET

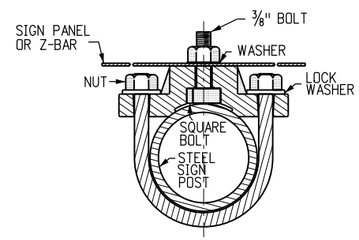


### TYPICAL BACK TO BACK

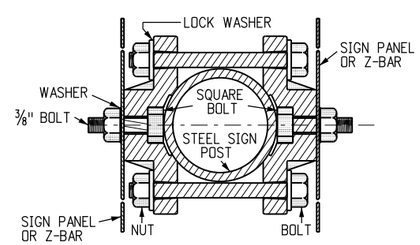


## DETAILS FOR SIGN PANEL ATTACHMENT

### PIPE CLAMP CASTING

PIPE CLAMP CASTING SHALL BE ASTM B26 OR B108 ALUMINUM ALLOY A444.0-T4 OR 356.0-F. ALL SIGN MOUNTING CLAMP PARTS NOT MADE FROM ALUMINUM SHALL BE GALVANIZED STEEL IN CONFORMANCE WITH ASTM A153 OR STAINLESS STEEL.

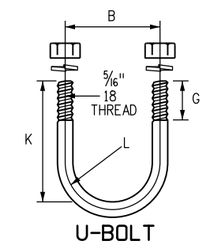


U-BOLT TO BE MADE IN ACCORDANCE WITH STANDARD MANUFACTURING PROCEDURE. 1/4" OR 5/18" DIAMETER STOCK IS PERMISSIBLE. AMERICAN STANDARD REGULAR SEMI-FINISHED HEX NUTS AND SPRING LOCKWASHERS.

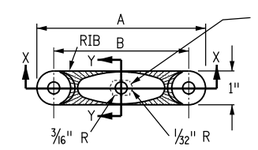


SLOT TO HOLD HEAD OF 3/8" HEX HEAD BOLT. THE BOLT SHALL BE 1 1/4" LONG, WITH FULL THREADS, A MEDIUM WASHER, AND GALVANIZED STEEL OR ALUMINUM SELF-LOCKING HEX HEAD NUT. THE BOLT HEAD MUST NOT TURN IN THE SLOT.

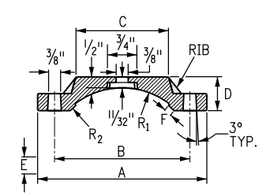


SECTION X-X

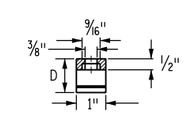


SECTION Y-Y

## MOUNTING CLAMP FOR SOCKET OR SLIPBASE

| Computer File Information | | |
|---|---|---|
| Creation Date: 07/04/12 | Initials: SCL | |
| Last Modification Date: 10/23/14 | Initials: KEN | R-1 |
| Full Path: www.coloradodot.info/library/traffic/traffic-s-standard-plans | | R-2 |
| Drawing File Name: S-614-08.dgn | | |
| CAD Ver.: MicroStation V8i Scale: Not to Scale Units: English | | |

| Sheet Revisions | |
|---|---|
| Date: | Comments |
| 03/05/13 | UPDATED DETAIL TITLES |
| 10/23/14 | MOVED SLIPBASE DETAILS TO SHEET 3 |
| | |
| | |


Colorado Department of Transportation
4201 East Arkansas Avenue
Denver, Colorado 80222
Phone: 303-757-9543 FAX: 303-757-9219
Safety & Traffic Engineering KCM


# TUBULAR STEEL SIGN SUPPORT DETAILS

Issued By: Safety & Traffic Engineering Branch July 4, 2012

STANDARD PLAN NO.

S-614-8

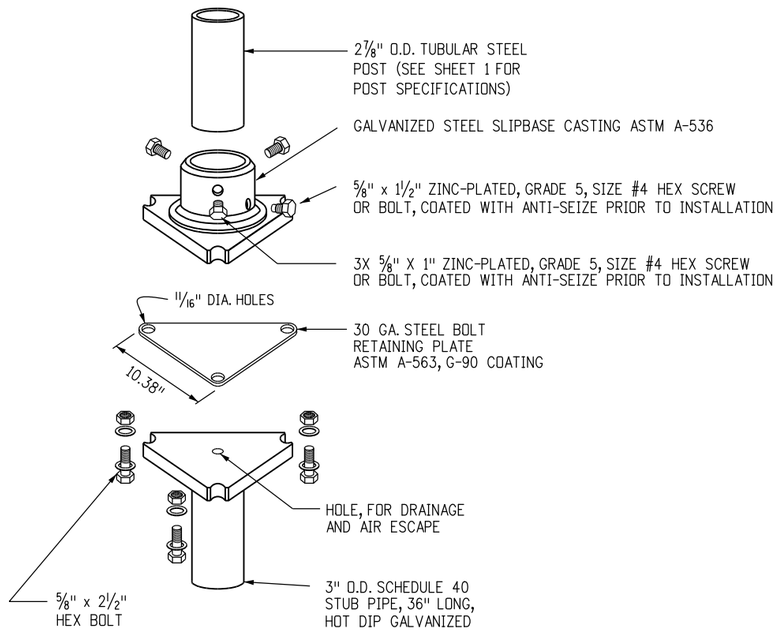


TYPICAL ASSEMBLY

# CAST-IN-PLACE SLIPBASE INSTALLATION

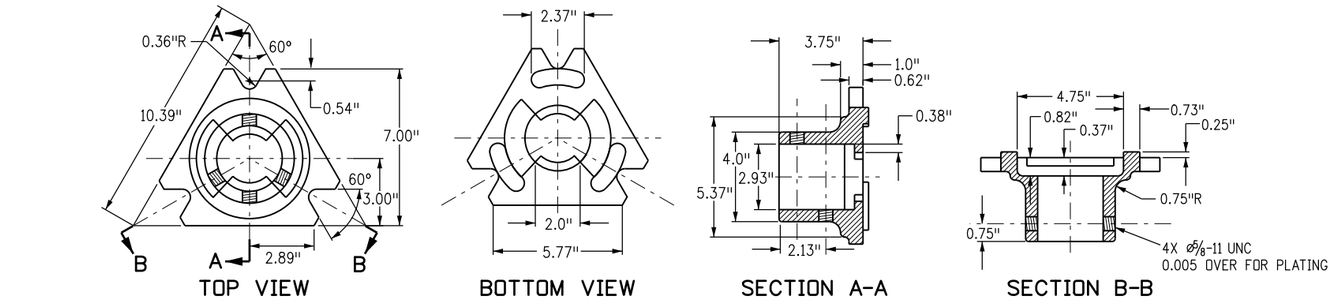


SLIPBASE CASTING 1

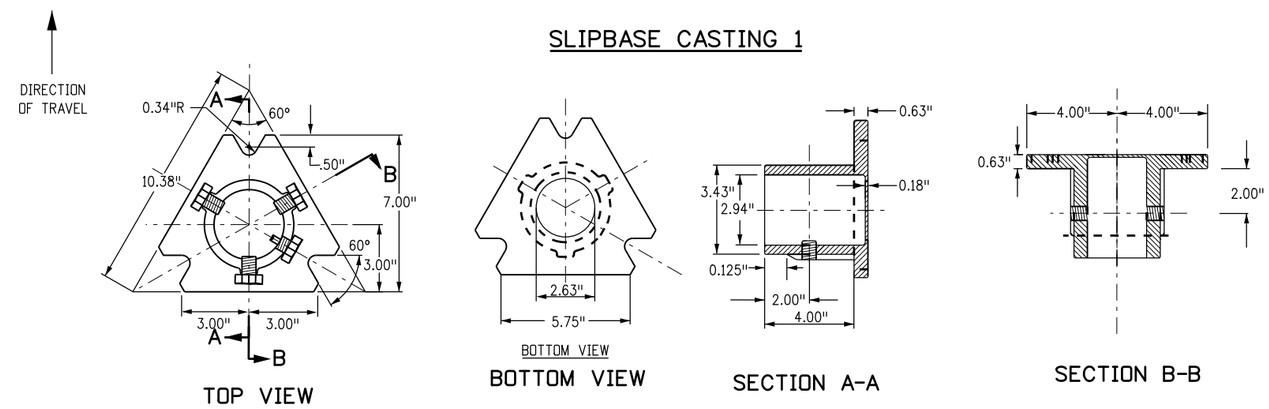


SLIPBASE CASTING 2

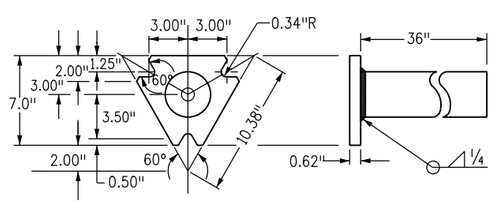


SLIPBASE STUB POST

BASE PLATE FABRICATION REQUIREMENTS:

BASE PLATE: 3/4 INCH ASTM A 36 PLATE STEEL

PIPE STUB: 3 INCH NOMINAL SCHEDULE 80, ASTM A 500 GR B

TOP PLATE: MEET REQUIREMENTS OF STD PLAN NO. S-614-8, SHEET 2

MEET ASTM A 123 GALVANIZING AFTER FABRICATION IS COMPLETED.

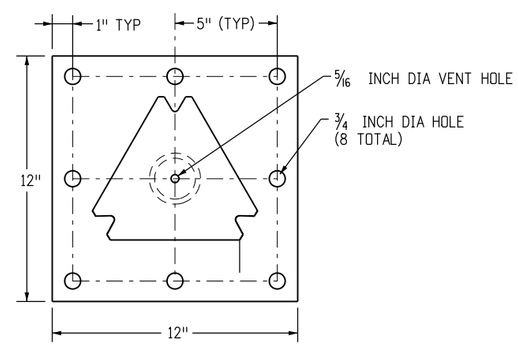


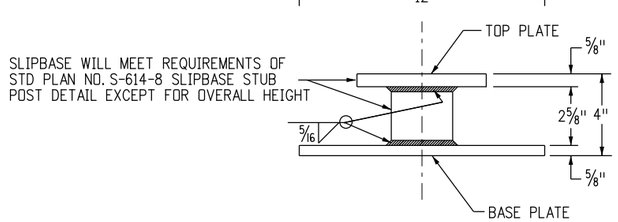


BASE PLATE DETAIL

## SURFACE MOUNT SLIPBASE TUBULAR STEEL SIGN BASE REQUIREMENTS

FOR 2-7/8 INCH POSTS (P1 OR P2 POSTS)
FOR CONCRETE SURFACES GREATER THAN 7 INCHES THICK
FOR CONCRETE SURFACES GREATER THAN 12 INCHES IN WIDTH

MOUNTING HARDWARE

- 8 - EACH 5/8 x 5 1/2 INCH LONG "HILTI KWIK HUS-EZ SCREW ANCHORS
- 16 - EACH 5/8 INCH FLAT WASHERS
- 8 - EACH 5/8 INCH LOCK WASHERS
- 8 - EACH 5/8 INCH NUTS

ALL HARDWARE WILL BE GALVANIZED OR ZINC PLATED.

INSTALLATION REQUIREMENTS:

DRILL: (8) - 5/8 INCH HOLES 6 INCH DEEP, CLEAN HOLE PRIOR TO INSTALLING ANCHORS

USE ADDITIONAL WASHERS FOR SHIMMING TO LEVEL BASE PLATE.

## SURFACE MOUNT SLIPBASE TUBULAR STEEL SIGN BASE NOTES

1. REFER TO SIGNING PLANS FOR SIGN LOCATIONS AND HEIGHT
2. MINUMUM ALLOWABLE TENSION CAPACITY FOR WEDGE ANCHORS = 3000 LBS.
3. MAXIMUM ALLOWABLE MOMENT FOR SIGN BASE = 5.13 kip-ft.

# RETRO-FIT SLIPBASE INSTALLATION

| Computer File Information | |
|---|---|
| Creation Date: 07/04/12 | Initials: KEN |
| Last Modification Date: 12/01/16 | Initials: RPR |
| Full Path: www.coloradodot.info/library/traffic/traffic-s-standard-plans | |
| Drawing File Name: S-614-08.dgn | |
| CAD Ver.: MicroStation V8i Scale: Not to Scale | Units: English |

| | Sheet Revisions | |
|---|---|---|
| | Date: | Comments |
| R-1 | 10/23/14 | NEW SHEET. INCLUDES SLIP BASE DETAILS PLUS 4" BASE PLATE DETAIL |
| R-2 | 04/01/16 | UPDATES TO RETRO-FIT HARDWARE |
| R-3 | 12/01/16 | ADDED DETAILS FOR SLIPBASE 2 |


Colorado Department of Transportation
4201 East Arkansas Avenue
Denver, Colorado 80222
Phone: 303-757-9543 FAX: 303-757-9219
Safety & Traffic Engineering KCM


TUBULAR STEEL SIGN SUPPORT DETAILS

Issued By: Safety & Traffic Engineering Branch July 4, 2012

STANDARD PLAN NO.

S-614-8

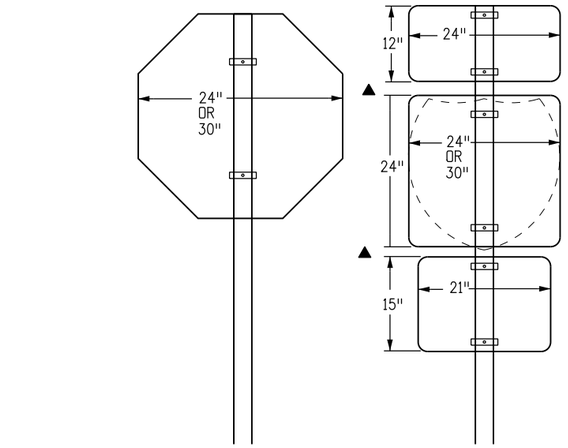


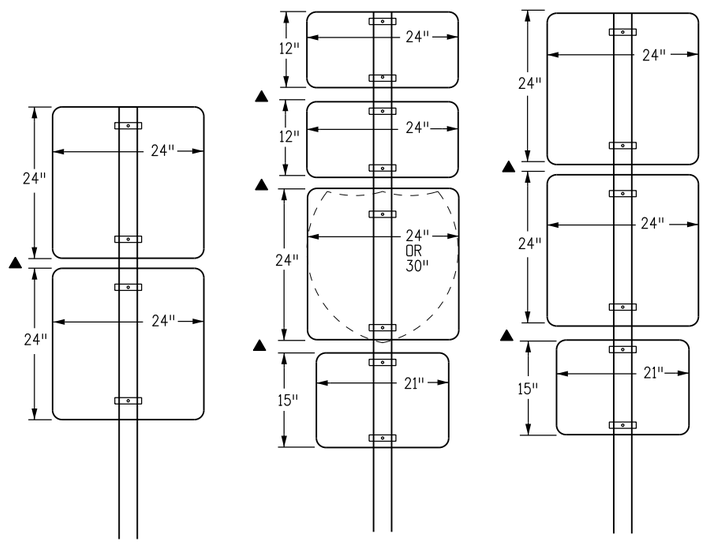


CLASS I SIGN COMBINATIONS (DIRECT ATTACHMENT)

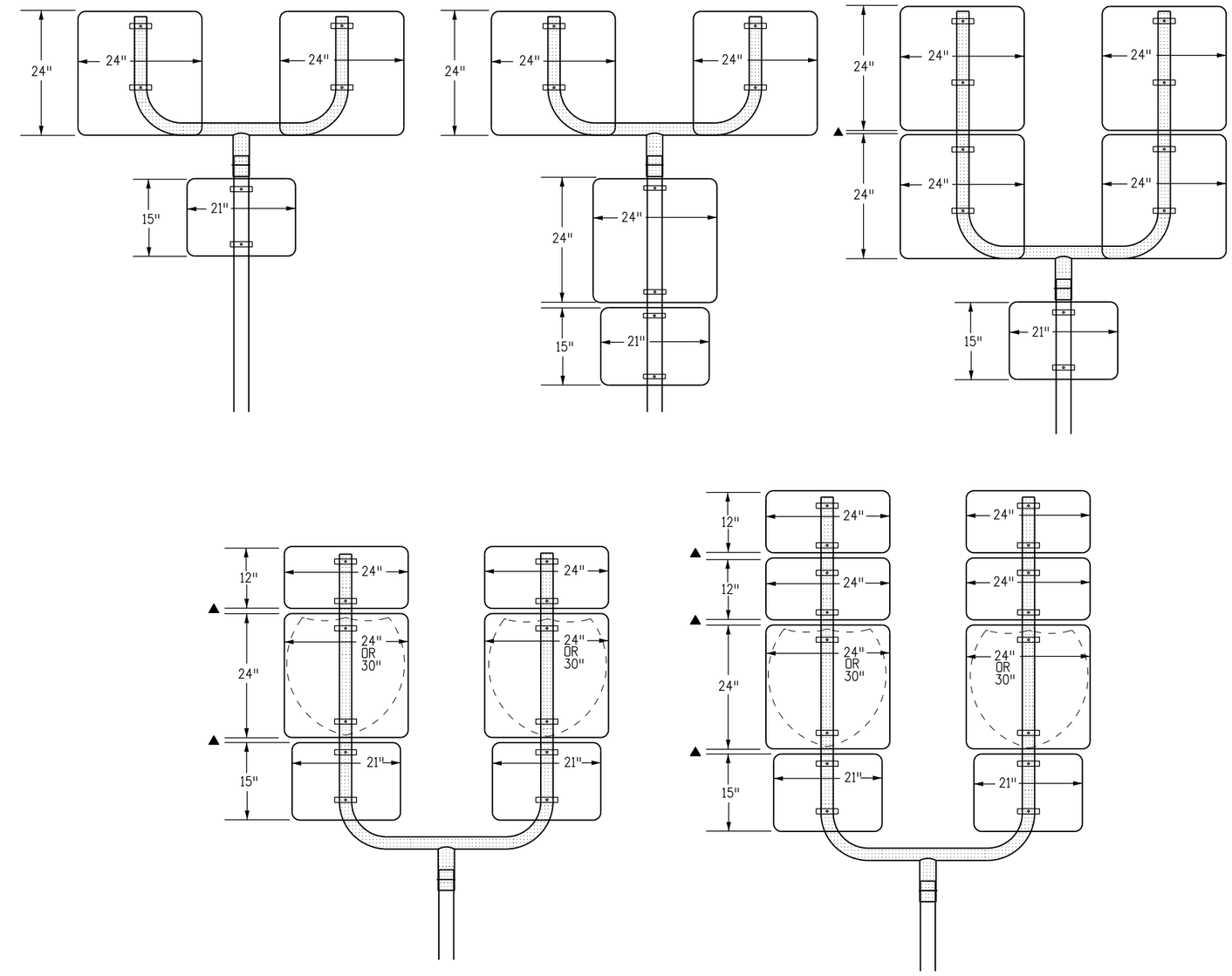


CLASS I SIGN COMBINATIONS USING U-BRACKETS

▲ SEE NOTE 6 ON SHEET 5

| Computer File Information | | Sheet Revisions | |
|---|---|---|---|
| Creation Date: 07/04/12 | Initials: KEN | Date: | Comments |
| Last Modification Date: | Initials: | | |
| Full Path: www.coloradodot.info/library/traffic/traffic-s-standard-plans | | | |
| Drawing File Name: S-614-08.dgn | | | |
| CAD Ver.: MicroStation V8i Scale: Not to Scale | Units: English | | |


Colorado Department of Transportation
4201 East Arkansas Avenue
Denver, Colorado 80222
Phone: 303-757-9543 FAX: 303-757-9219
Safety & Traffic Engineering KCM


# TUBULAR STEEL SIGN SUPPORT DETAILS

Issued By: Safety & Traffic Engineering Branch July 4, 2012

STANDARD PLAN NO.

S-614-8

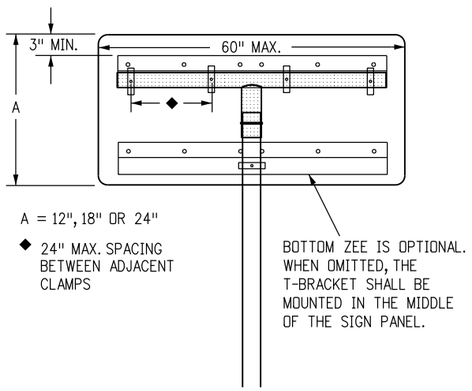


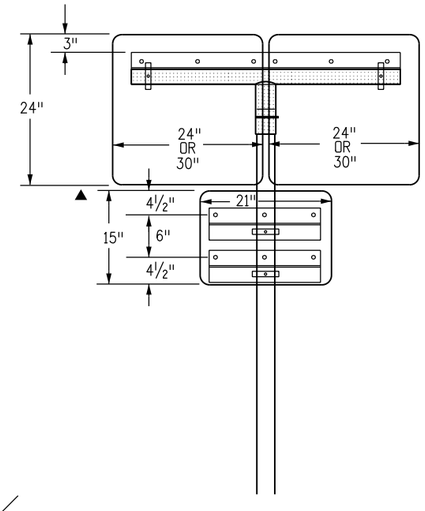


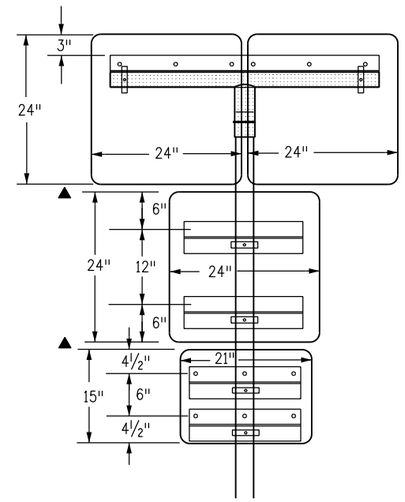


| PANEL WIDTHS | ZEE LENGTH |
|---|---|
| 21" | 15" |
| 24" | 18" |
| 30" | 24" |
| 36" | 30" |
| 42" | 36" |
| 45" | 39" |
| 48" | 42" |
| 54" | 48" |
| 60" | 54" |
| 36" DIAMOND | 22" |
| 48" DIAMOND | 36" |
| 24" & 24" | 43" |
| 24" & 30" | 49" |
| 30" & 30" | 55" |
| 36" & 36" | 67" |
| 45" & 36" | 76" |
| 24" & 24" & 24" | 68" |
| 24" & 24" & 30" | 74" |
| 24" & 30" & 24" | 74" |
| 30" & 24" & 30" | 80" |
| 24" & 30" & 30" | 80" |
| 30" & 30" & 30" | 86" |

## GENERAL NOTES

1. Z-BAR LENGTH SHALL BE 3 IN. (± ½ IN.) SHORT OF THE EDGE OF THE SIGN OR ROW OF SIGNS ON BOTH SIDES. THE ACCOMPANYING TABLE GIVES THE Z-BAR LENGTH FOR MOST TYPICAL PANEL COMBINATIONS.
2. FIRST AND LAST HOLES SHALL BE 2 IN. FROM EDGE OF Z-BAR. THE HOLES IN BETWEEN SHALL BE 6 IN. TO 8 IN. APART.
3. T AND U BRACKETS SHALL TERMINATE 2 IN. TO 3 IN. FROM EDGE OF SIGN PANEL. WHEN A ZEE IS CONNECTED TO A T-BRACKET, THEY SHALL BE THE SAME LENGTH EXCEPT WHEN THE ZEE MUST EXTEND BEYOND THE MAXIMUM LENGTH OF A T-BRACKET.
4. TWO MOUNTING CLAMPS ARE REQUIRED ON ZEES WHERE THERE IS ONLY ONE ZEE FOR THE PANEL AND THE ZEE IS ATTACHED TO ONLY ONE POST.
5. ZEES SHALL BE ATTACHED TO T-BRACKETS AND U-BRACKETS WITH U-BOLTS OR MOUNTING CLAMPS.
6. ▲ VERTICAL SPACING BETWEEN SIGN PANELS SHALL BE 1 IN. TO 1½ IN. TYPICAL.
7. IN SPECIAL CASES U-BRACKETS MAY BE USED TO MOUNT SIGNS THAT FACE DIFFERENT DIRECTIONS. THE ENGINEER SHALL DETERMINE THE ORIENTATION OF THE SIGN PANELS AND VERIFY THAT THE MAXIMUM ALLOWABLE WIND LOADS FOR THE POST ARE NOT EXCEEDED.

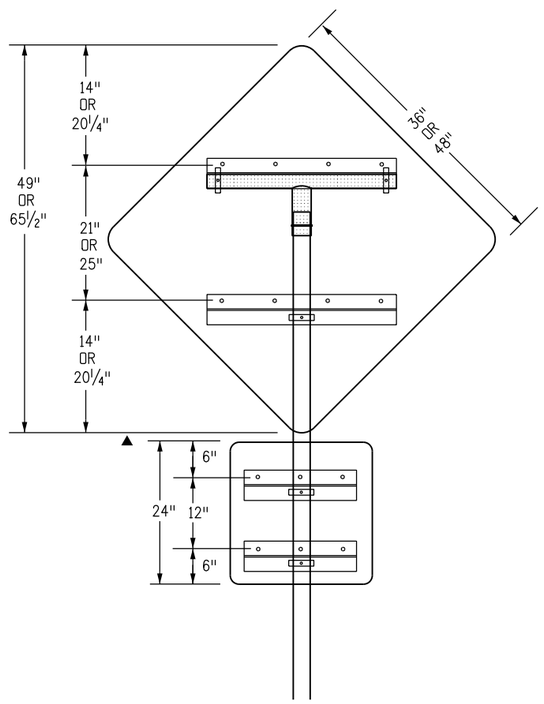


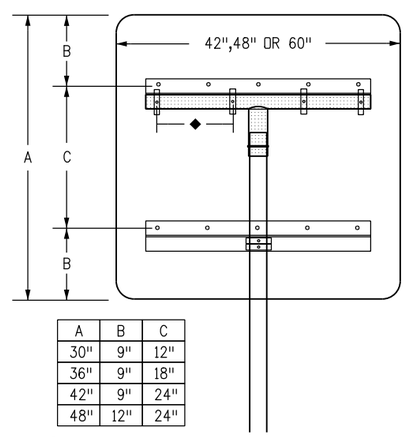


| A | B | C |
|---|---|---|
| 30" | 9" | 12" |
| 36" | 9" | 18" |
| 42" | 9" | 24" |
| 48" | 12" | 24" |

CLASS II SIGN COMBINATIONS USING T-BRACKETS WITH Z-BAR

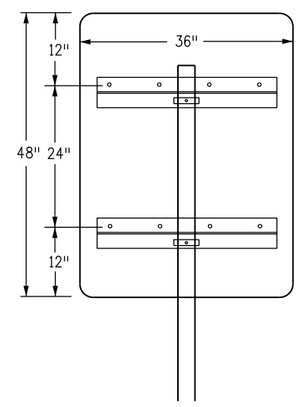


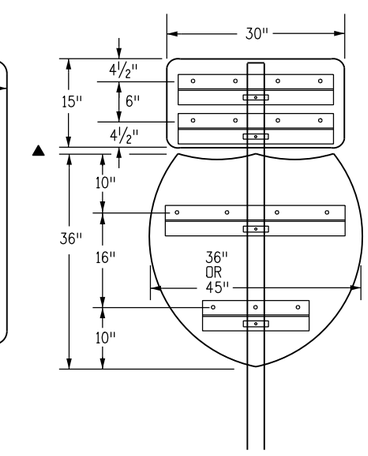


SINGLE POST CLASS II SIGNS USING Z-BAR

| Computer File Information | |
|---|---|
| Creation Date: 07/04/12 | Initials: KEN |
| Last Modification Date: | Initials: |
| Full Path: www.coloradodot.info/library/traffic/traffic-s-standard-plans | |
| Drawing File Name: S-614-08.dgn | |
| CAD Ver.: MicroStation V8i Scale: Not to Scale | Units: English |

| Sheet Revisions | |
|---|---|
| Date: | Comments |
| | |
| | |
| | |
| | |


Colorado Department of Transportation
4201 East Arkansas Avenue
Denver, Colorado 80222
Phone: 303-757-9543 FAX: 303-757-9219
Safety & Traffic Engineering KCM


# TUBULAR STEEL SIGN SUPPORT DETAILS

Issued By: Safety & Traffic Engineering Branch July 4, 2012

STANDARD PLAN NO.

S-614-8

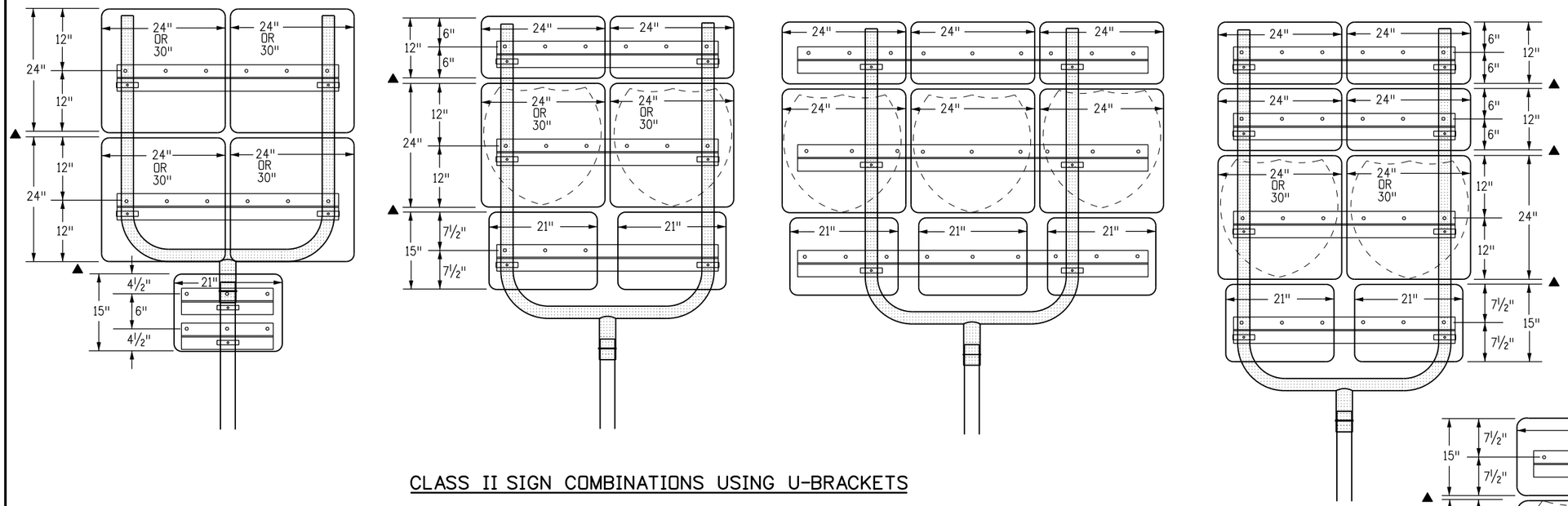


CLASS II SIGN COMBINATIONS USING U-BRACKETS

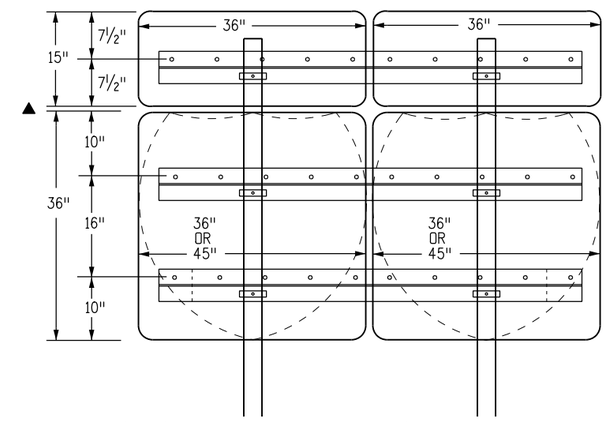


NOTE: THIS CONFIGURATION IS PREFERABLE TO USING TWO SEPARATE SIGNS.

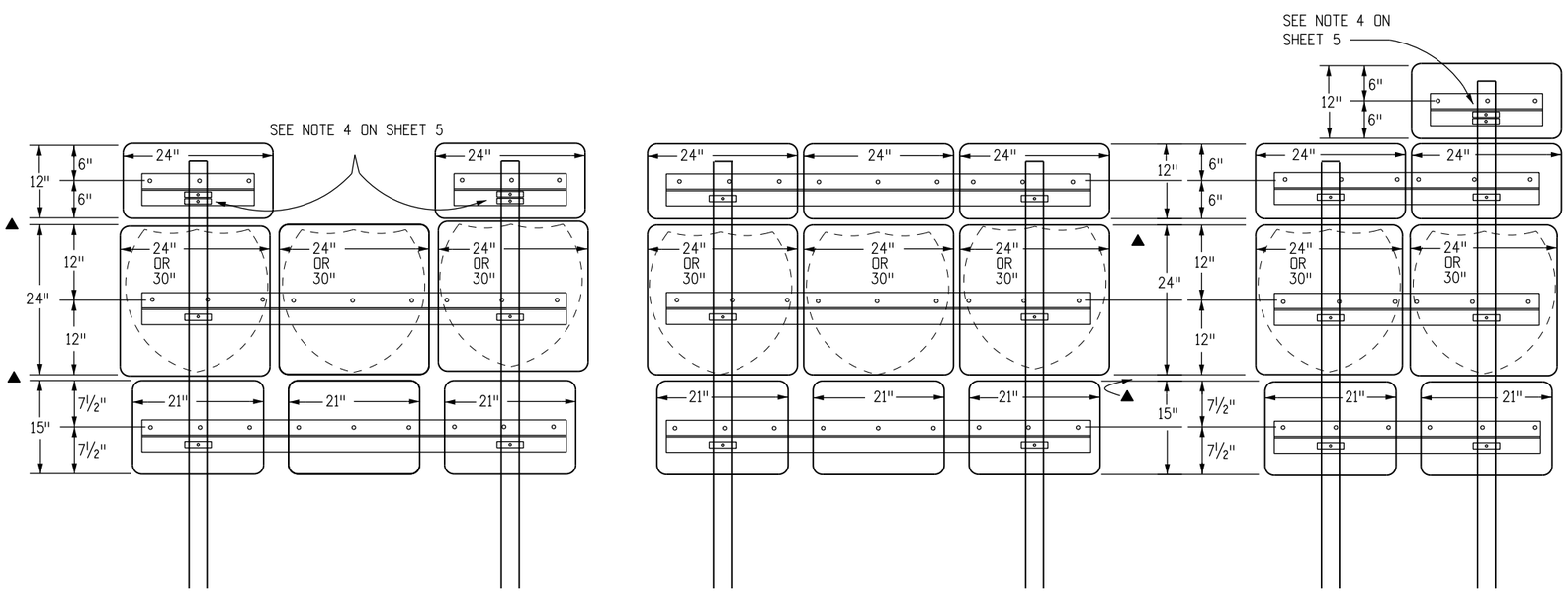


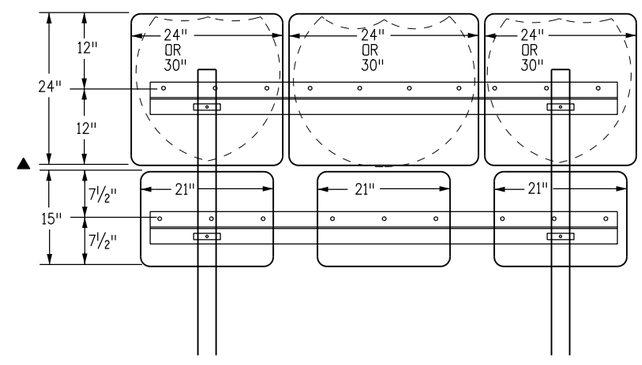


▲ SEE NOTE 6 ON SHEET 5

CLASS II SIGN COMBINATIONS USING TWO POSTS

| Computer File Information | | Sheet Revisions | |
|---|---|---|---|
| Creation Date: 07/04/12 Initials: KEN | | Date: | Comments |
| Last Modification Date: Initials: | | | |
| Full Path: www.coloradodot.info/library/traffic/traffic-s-standard-plans | | | |
| Drawing File Name: S-614-08.dgn | | | |
| CAD Ver.: MicroStation V8i Scale: Not to Scale Units: English | | | |


Colorado Department of Transportation
4201 East Arkansas Avenue
Denver, Colorado 80222
Phone: 303-757-9543 FAX: 303-757-9219
Safety & Traffic Engineering KCM


# TUBULAR STEEL SIGN SUPPORT DETAILS

Issued By: Safety & Traffic Engineering Branch July 4, 2012

STANDARD PLAN NO.

S-614-8