GENERAL NOTES

1. REFER TO THE ROADWAY PLANS FOR THE ACTUAL CONFIGURATION AND LOCATION OF TRAFFIC SIGNAL HEADS AND SIGNS MARKED WITH A ■ .
2. ALL POLES SHALL BE FABRICATED WITH ASTM A572 GRADE 65 STEEL.
3. ALL ARMS SHALL BE FABRICATED WITH ASTM A572 GRADE 65 STEEL OR ASTM A595 GRADE A STEEL WITH A MINIMUM YIELD POINT OF 55 KSI.
4. ALL POLES AND ARMS SHALL COMPLY WITH THE DIMENSIONAL TOLERANCES SPECIFIED IN ASTM A500, A501, OR A595.
5. ALL POLES AND ARMS SHALL BE ROUND OR DODECAGONAL (12 SIDES) TUBES WITH A 0.14 IN/FT TAPER.
6. HARDENED WASHERS SHALL CONFORM TO ASTM F436.
7. ALL POLES AND ARMS SHALL BE GALVANIZED INSIDE AND OUTSIDE AFTER FABRICATION IN ACCORDANCE WITH ASTM A123, UNLESS PAINTING IS CALLED FOR ON THE PLANS. PAINTING SHALL CONFORM TO SECTION 522, DUPLEX COATING SYSTEM.
8. POLE AND MAST ARM SPLICES SHALL BE MECHANICALLY FORCED TOGETHER FOR A SNUG FIT.
9. ALL MAST ARMS MORE THAN 35 FT IN LENGTH SHALL BE TWO PIECE CONSTRUCTION TO LIMIT ARM WEIGHTS.
10. GALVANIZED ASTM A325 H.S. BOLTS SHALL BE USED FOR ATTACHING MAST ARMS. A LUBRICATED TIGHTENING TORQUE OF 178 FT-LBS FOR ¾" DIAMETER BOLTS, AND 1300 FT-LBS FOR 1½" INCH DIAMETER BOLTS SHALL BE USED TO TIGHTEN ALL H.S. BOLTS. MAST ARMS SHALL BE TEMPORARILY SUPPORTED TO TAKE LOAD OFF OF FIELD CONNECTIONS WHILE BOLTS ARE TIGHTENED IN ORDER TO FIRMLY SEAT THE FLANGE PLATE. BOLTS SHALL BE SEQUENTIALLY TIGHTENED.
11. CAST POLE END CAP TO BE SECURED IN PLACE WITH 3 SET SCREWS.
12. ALL SIGNAL HEADS, SIGNS, AND HARDWARE SHALL BE FIELD POSITIONED.
13. ACCESSORIES TO BE HOT DIP GALVANIZED IN ACCORDANCE WITH ASTM A153.
14. ALL PLATES SHALL BE FABRICATED WITH AASHTO M270 (ASTM A709) GRADE 36 STEEL AND SHALL COMPLY WITH THE DIMENSIONAL TOLERANCES SPECIFIED IN ASTM A6. ALL HANDHOLES SHALL BE FABRICATED WITH ASTM A572 GRADE 42 STEEL.
15. LEVELING CONCRETE SHALL BE 3000 PSI AIR ENTRAINED CONCRETE VIBRATED IN PLACE BELOW THE POLE BASE PLATE.
16. CAISSONS SHALL BE PLACED AGAINST UNDISTURBED EARTH. WET OR CAVING HOLES SHALL BE BACKFILLED WITH FLOW-FILL AND REDRILLED AFTER A THREE DAY CURING PERIOD WITHOUT THE USE OF A CASING.
17. CAISSONS SHALL BE CONSTRUCTED WITH AIR ENTRAINED CLASS BZ CONCRETE IN ACCORDANCE WITH SECTION 503 OF THE STANDARD SPECIFICATIONS. REINFORCING STEEL SHALL BE GRADE 60.
18. CAISSON CONCRETE MUST HAVE A MINIMUM COMPRESSIVE STRENGTH OF 2,700 PSI BEFORE INSTALLING THE SIGNAL STRUCTURE; VERIFY CONCRETE STRENGTH WITH MATURITY METER.
19. U-BOLTS AND ANCHOR BOLTS SHALL BE FABRICATED WITH AASHTO M314-90 GRADE 55 STEEL.
20. ANCHOR BOLTS SHALL BE FABRICATED WITH HEAVY HEX NUTS AND FLAT WASHERS, AND EXTENDED A MINIMUM OF ¾" ABOVE THE NUT AFTER COMPLETING THE TIGHTENING PROCESS. THREAD UPPER 12 INCHES AND GALVANIZE UPPER 13 INCHES OF THE ANCHOR BOLTS. FIELD WELDING OF ANCHOR BOLTS TO REBAR DURING ERECTION WILL NOT BE ALLOWED. ANCHOR BOLTS SHALL BE SET WITH A STEEL TEMPLATE UNTIL THE CONCRETE HAS CURED AT LEAST TWO DAYS. THEY SHALL BE TIGHTENED USING THE TURN-OF-NUT METHOD BY FIRST TIGHTENING THEM TO SNUG TIGHT, WHICH IS DEFINED AS THE TIGHTNESS THAT EXISTS WHEN THE UPPER AND LOWER NUTS ARE IN FIRM CONTACT WITH THE BASE PLATE. WITH MAST ARMS FREE TO DEFLECT, THE UPPER AND LOWER NUTS SHALL THEN EACH BE ROTATED AN ADDITIONAL 1/12 TURN (30° ± 5°) WITH A SLUGGING, HYDRAULIC OR AIR IMPACT WRENCH.
21. WELDING OF STEEL SHALL CONFORM TO THE REQUIREMENTS OF ANSI/AWS D1.1. ALL AREAS TO BE WELDED SHALL BE GROUND TO BRIGHT METAL. ALL WELDING AND REQUIRED TESTING SHALL BE COMPLETE BEFORE ANY MATERIAL IS GALVANIZED. ALL CIRCUMFERENTIAL WELDS SHALL BE NON-DESTRUCTIVELY TESTED USING THE ENHANCED MAGNETIC PARTICLE METHOD IN ACCORDANCE WITH SUBSECTION 509.18 (d) OF THE STANDARD SPECIFICATIONS. THE ACCEPTANCE CRITERIA IS STATED IN TABLE 6.1 OF ANSI/AWS D1.1. ALL LONGITUDINAL WELDS WITHIN 6 INCHES OF FULL PENETRATION CIRCUMFERENTIAL GROOVE WELDS AND FULL PENETRATION GROOVE WELDS SHALL BE INSPECTED AS SPECIFIED ABOVE. MAXIMUM WELD UNDERCUT SHALL BE 0.01 INCHES.
22. ALL ELECTRICAL CONNECTIONS TO THE SIGNALS SHALL BE GROUNDED IN ACCORDANCE WITH APPLICABLE ELECTRICAL CODES.
23. CERTIFIED MILL TEST REPORTS INCLUDING CHARPY V-NOTCH (CVN) TEST RESULTS, WELD INSPECTION REPORTS AND ENHANCED MAGNETIC PARTICLE TEST REPORTS SHALL BE SUBMITTED TO CDOT STAFF BRIDGE, 4201 E. ARKANSAS AVE., DENVER COLORADO 80222 AS SOON AS THEY BECOME AVAILABLE. CVN TEST RESULTS FOR ASTM A572 GRADES 42, 55 AND 65 STEEL SHALL HAVE A MINIMUM VALUE OF 15 FT-LBS AT 40°F AS PER THE H FREQUENCY TEST REQUIREMENTS IN AASHTO T243 (ASTM A673).
24. SHOP DRAWINGS SHALL BE SUBMITTED TO THE ENGINEER FOR REVIEW IN ACCORDANCE WITH SUBSECTION 105.02 OF THE STANDARD SPECIFICATIONS.
25. TRAFFIC SIGNALS MOUNTED ON MAST ARMS SHALL BE FURNISHED WITH ASTRO TYPE MOUNTING BRACKETS.
26. END SECTION DIAMETERS MUST BE INCREASED TO ACCOMMODATE OUT-OF-ROUNDNESS, GALVANIZING THICKNESS AND SEAM WELD PROFILES TO PROVIDE THE MINIMUM REQUIRED ARM SLIP SPLICE LENGTHS AND POLE MEMBER OVERLAPS.
27. SECURE ARM FLANGE PLATE, POLE BASE PLATE, AND CONNECTION FACE PLATE DURING WELDING TO PREVENT DISTORTION.
28. IF THE VERTICAL DEFLECTIONS DURING A 10 TO 20 MPH WIND EXCEED THE GALLOPING DEFLECTION LIMITS LISTED IN THE TABLE ON SHEET 2 OF 4, THE OWNER SHALL INSTALL AN ALUMINUM SIGN BLANK (16" X 66" OR LARGER) NEAR THE FREE END OF THE TRAFFIC SIGNAL MAST ARM. SAID SIGN BLANK SHALL BE ROTATED ABOUT THE LONGITUDINAL AXIS OF THE ARM WHILE THE WIND BLOWS TO MINIMIZE THE GALLOPING DEFLECTIONS. CONTACT STAFF BRIDGE FOR MORE INFORMATION.
29. ONE DRILLED HOLE WITH A MAXIMUM DIAMETER OF ¾" IS ALLOWED AT LOCATIONS MARKED WITH A ▲ TO ACCOMMODATE ELECTRICAL WIRING.
30. SEE S-614-42 AND S-614-43 FOR "CABINET FOUNDATION DETAILS" AND "TRAFFIC LOOP AND MISC. SIGNAL DETAILS" RESPECTIVELY.

DESIGN DATA

1. DRAWING SHOWN HAS 5 SIGNAL HEADS, SHORTER ARM LENGTHS MAY HAVE FEWER HEADS. THIS CONFIGURATION IS INTENDED TO REPRESENT A WORST CASE LOADING SITUATION.

   (55'), 50' — 5 SIGNAL HEADS; (45'), 40' — 4 SIGNAL HEADS; (35'), 30' — 3 SIGNAL HEADS; (25') — 2 SIGNAL HEADS

   THE DESIGN LENGTH "L" FOR EACH SERIES IS SHOWN IN PARENTHESIS.
2. THE DESIGNS HEREIN ASSUME THAT SIGNALS ARE INSTALLED WITHIN THE ROADWAY EARTHWORK PRISM WITH THE FOLLOWING SOIL PARAMETERS:
   SOIL DENSITY γ = 110 LB./CU.FT.
   SOIL COHESION = 750 LB./SQ.FT. FOR MEDIUM STIFF COHESIVE SOIL
   SOIL Ø ANGLE = 30° FOR MEDIUM DENSE COHESIONLESS SOIL
   SF = 1.25 FOR TORSIONAL RESISTANCE AND 3.0 FOR FLEXURAL RESISTANCE
3. CONTACT THE ENGINEER IF ANY OF THE FOLLOWING SOIL CONDITIONS ARE ENCOUNTERED DURING DRILLING:
   (A) SIGNALS WILL NOT BE INSTALLED WITHIN THE ROADWAY EARTHWORK PRISM.
   (B) THE SOIL HAS A HIGH ORGANIC CONTENT OR CONSISTS OF SATURATED SILT AND CLAY.
   (C) THE SITE WON'T SUPPORT THE WEIGHT OF THE DRILLING RIG.
   (D) THE FOUNDATION SOILS ARE NOT HOMOGENOUS.
   (E) FIRM BEDROCK IS ENCOUNTERED
4. TRAFFIC SIGNAL STRUCTURES HAVE BEEN DESIGNED IN ACCORDANCE WITH THE AASHTO STANDARD SPECIFICATIONS FOR STRUCTURAL SUPPORTS FOR HIGHWAY SIGNS LUMINAIRES, AND TRAFFIC SIGNALS, FOURTH EDITION, 2001.
5. A DESIGN WIND VELOCITY OF 100 MPH AND ONE 12' LANE WITH A 65 MPH TRUCK INDUCED GUST LOADING HAVE BEEN USED FOR THE DESIGNS HEREIN.
6. GALLOPING LOADS ARE EXCLUDED FROM FATIGUE DESIGN AND CATEGORY TWO IMPORTANCE FACTORS HAVE BEEN USED.
7. THE SOCKET WELD OPTION IS LIMITED TO 150% OF THE ALLOWABLE FATIGUE STRESS FOR AN E' WELD IN ORDER TO RECOGNIZE THE BENEFICIAL EFFECTS DERIVED FROM LOAD SHARING BETWEEN THE TWO WELDS.

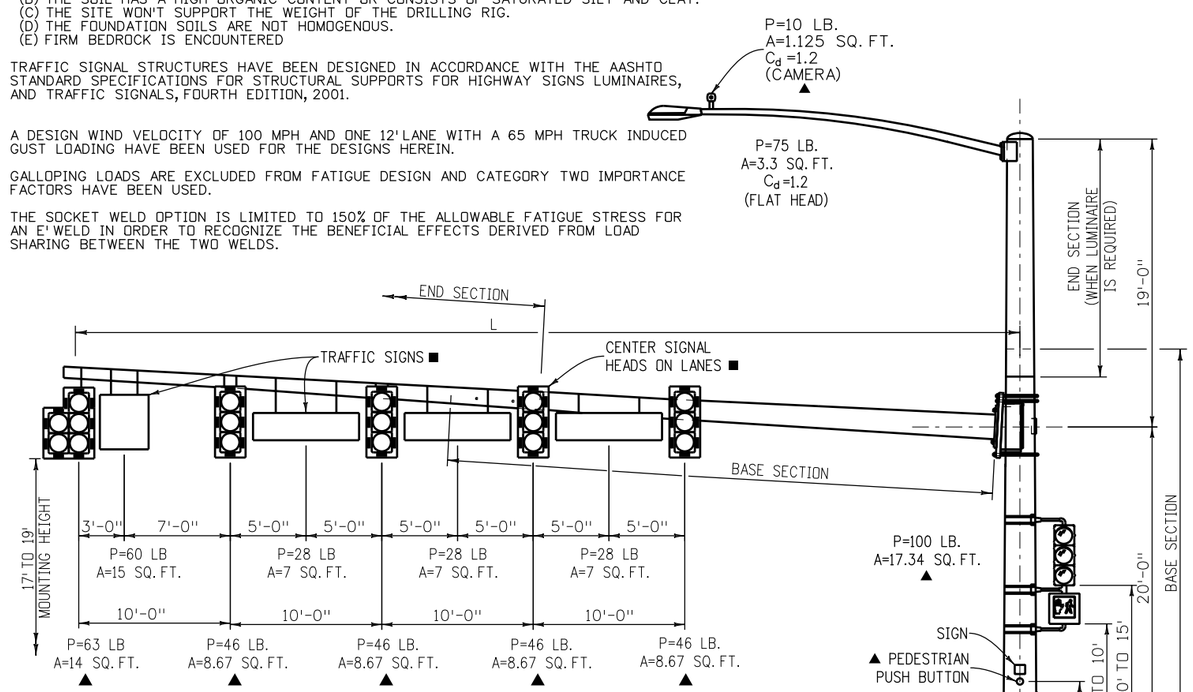

MAST ARM LENGTH (L) (FT.)	POLE DATA							
	BASE SECTION *				END SECTION ◆			
	LENGTH (FT.)	TOP Ø (IN.)	BOTTOM Ø (IN.)	THK. (IN.)	LENGTH (FT.)	TOP Ø (IN.)	BOTTOM Ø (IN.)	THK. (IN.)
ALL ARMS	24.47	11.57	15.00	0.3125	16.00	9.90	12.14	0.1793

* BASE SECTION LENGTHS INCLUDE THE SPLICE LENGTH AS PER THE "MAST ARM SLIP SPLICE DETAIL" ON SHEET 2 OF 4

◆ SEE GENERAL NOTE 26

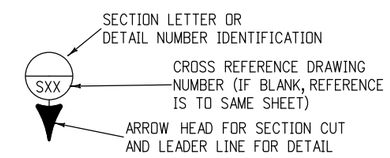

Computer File Information	
Creation Date: 07-04-12	Initials: LAW
Last Modification Date: 07-04-12	Initials: LAW
Full Path: www.coloradodot.info/business/designsupport	
Drawing File Name: Sheet_S-614-40A_1of4 Rev3.dgn	
CAD Ver.: MicroStation V8 Scale: Not to Scale	Units: English

	Sheet Revisions	
	Date:	Comments
R-1	03/20/15	ADD POLE SET BACK NOTES
R-2	07/01/15	REVISE NOTES 5 & 20
R-3	06/17/16	REVISE NOTE 18
R-X		

Colorado Department of Transportation
4201 East Arkansas Avenue
Denver, Colorado 80222
Phone: (303) 757-9543
Fax: (303) 757-9219
Safety & Traffic Engineering Branch KCM/RLO

ALTERNATE TRAFFIC SIGNAL INSTALLATION DETAILS

Issued By: Safety & Traffic Engineering Branch July 4, 2012

STANDARD PLAN NO.
S-614-40A
Sheet No. 1 of 4

MAST ARM LENGTH (L) (FT.)	MAST ARM DATA								GALLOPING DEFLECTION LIMITS (Δ) (IN) ●
	BASE SECTION ✶				END SECTION ◆				
	LENGTH (FT.)	TIP ø (IN.)	TRUNK ø (IN.)	THK (IN.)	LENGTH (FT.)	TIP ø (IN.)	TRUNK ø (IN.)	THK. (IN.)	
25	23.92	6.65	10.00	0.2391	N.A.	N.A.	N.A.	N.A.	✦
35	33.92	7.50	12.25	0.2391	N.A.	N.A.	N.A.	N.A.	✦
45	25.16	9.73	13.25	0.3125	20.00	7.46	10.26	0.1793	6"
55	25.34	11.20	14.75	0.3125	30.00	7.56	11.76	0.1793	11"

✶ BASE SECTION LENGTH INCLUDES THE SPLICE LENGTH AS PER THE "MAST ARM SLIP SPLICE DETAIL" BELOW.
◆ SEE GENERAL NOTE 26 ON SHEET 1 OF 4.
● SEE GENERAL NOTE 28 ON SHEET 1 OF 4.
✦ DEFLECTION TOO SMALL TO MEASURE.
■ STOP ALL WELDS 1/2" SHORT OF PLATE EDGES AND BOLT HOLES.

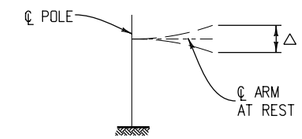

GALLOPING DEFLECTION LIMITS

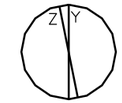

Y = DIAMETER OF A ROUND TUBE.
Z = PERPENDICULAR DISTANCE BETWEEN FLATS.
Y AND Z ARE OUTSIDE DIAMETER DIMENSIONS.
Z/Y RATIO MUST BE .98 MINIMUM.

OPTIONAL MULTI-SIDED POLE OR MAST ARM

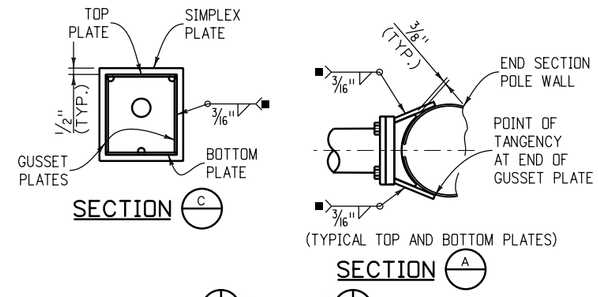

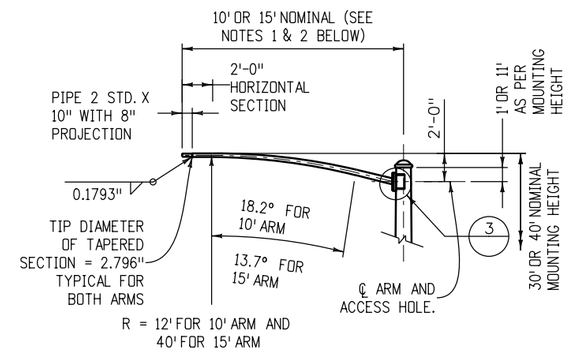

LUMINAIRE ARM NOTES

1. 10' LUMINAIRE ARM SHAFT: WALL THICKNESS = 0.1793"; LINEAR TAPER = 0.14 IN./FT.; DIAMETER AT ARM SIMPLEX PLATE = 4.066".
2. 15' LUMINAIRE ARM SHAFT: WALL THICKNESS = 0.1793"; LINEAR TAPER = 0.14 IN./FT.; DIAMETER AT ARM SIMPLEX PLATE = 4.679".

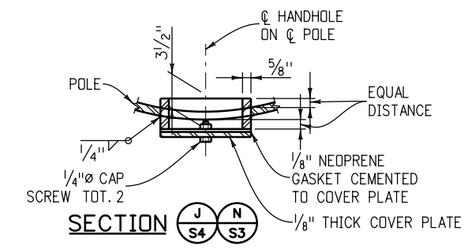

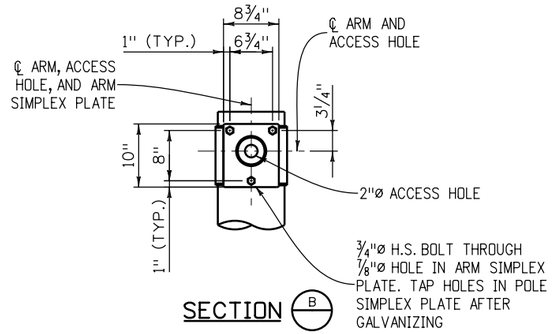

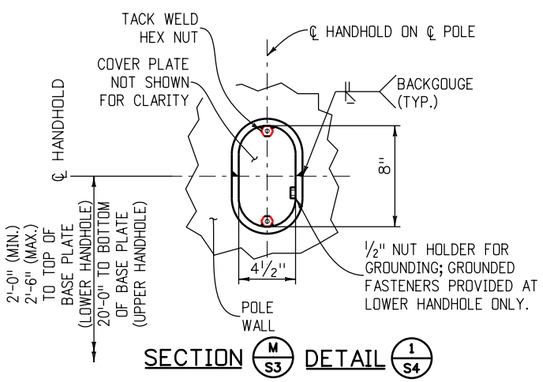

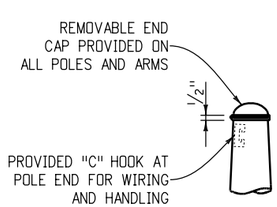

END CAP DETAIL

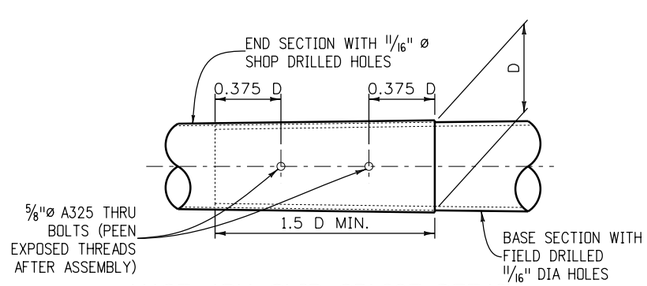

MAST ARM SLIP SPLICE DETAIL

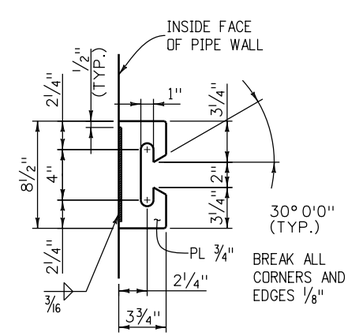

"C" HOOK DETAIL

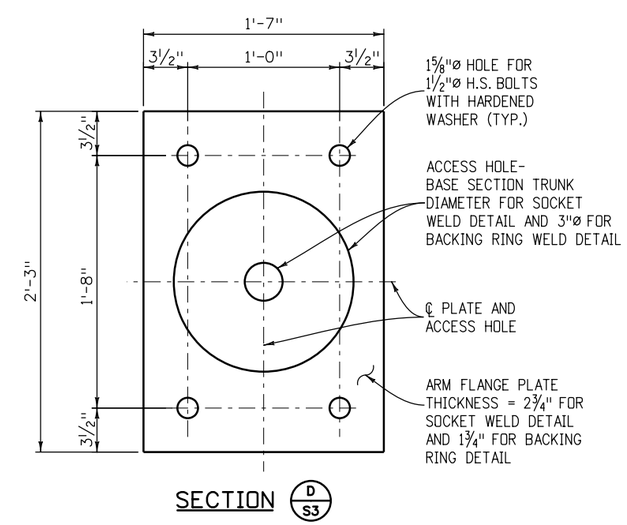

Computer File Information		
Creation Date: 07-04-12	Initials: LAW	
Last Modification Date: 07-04-12	Initials: LAW	R-X
Full Path: www.coloradodot.info/business/designsupport		R-X
Drawing File Name: Sheet_S-614-40A_2of5.dgn		R-X
CAD Ver.: MicroStation V8 Scale: Not to Scale Units: English		R-X

Sheet Revisions	
Date:	Comments

Colorado Department of Transportation
4201 East Arkansas Avenue
Denver, Colorado 80222
Phone: (303) 757-9543
Fax: (303) 757-9219
Safety & Traffic Engineering Branch KCM/RLO

ALTERNATE TRAFFIC SIGNAL INSTALLATION DETAILS

Issued By: Safety & Traffic Engineering Branch July 4, 2012

STANDARD PLAN NO.
S-614-40A
Sheet No. 2 of 4

- ● BEND RADIUS MEASURED TO THE ℄ OF EACH U-BOLT. INCREASE RADII AS NEEDED TO ACCOMODATE OUT-OF-ROUNDNESS, GALVANIZING THICKNESS AND SEAM WELD PROFILES. U-BOLTS SHALL BE TIGHTENED 1/12 TURN (30° ± 5°) PAST SNUG TIGHT; PEEN THREADS AFTER TIGHTENING. U-BOLTS AND FACEPLATE SHALL BE MOUNTED ON BASE SECTION PRIOR TO SHIPMENT.
- ✚ MATCH FIT STOP BAR TO SIDE PLATE USING TACK WELDS TO ENSURE UNIFORM REARING.
- ■ STOP ALL WELDS 1/2" SHORT OF PLATE EDGES AND BOLT HOLES.
- * BEND STOP BAR TO MATCH POLE CURVATURE.

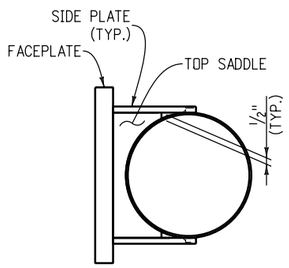

SECTION P

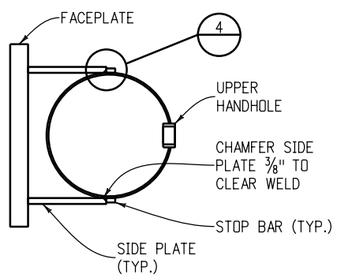

SECTION Q

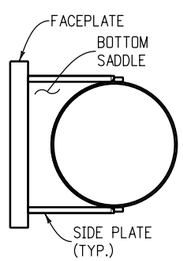

SECTION R

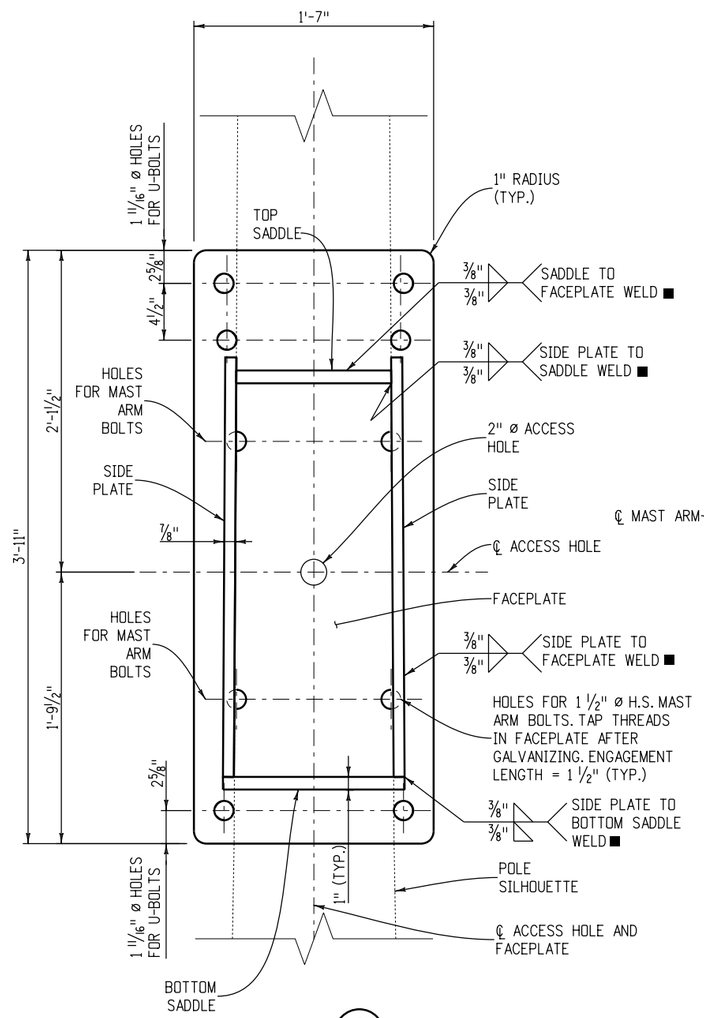

SECTION O

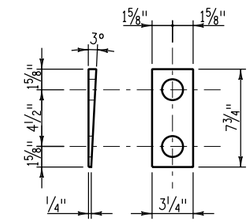

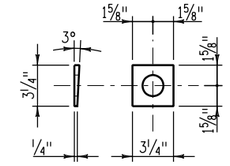

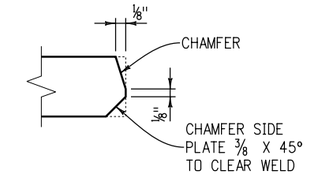

DETAIL 4

TAPERED WASHER DETAILS

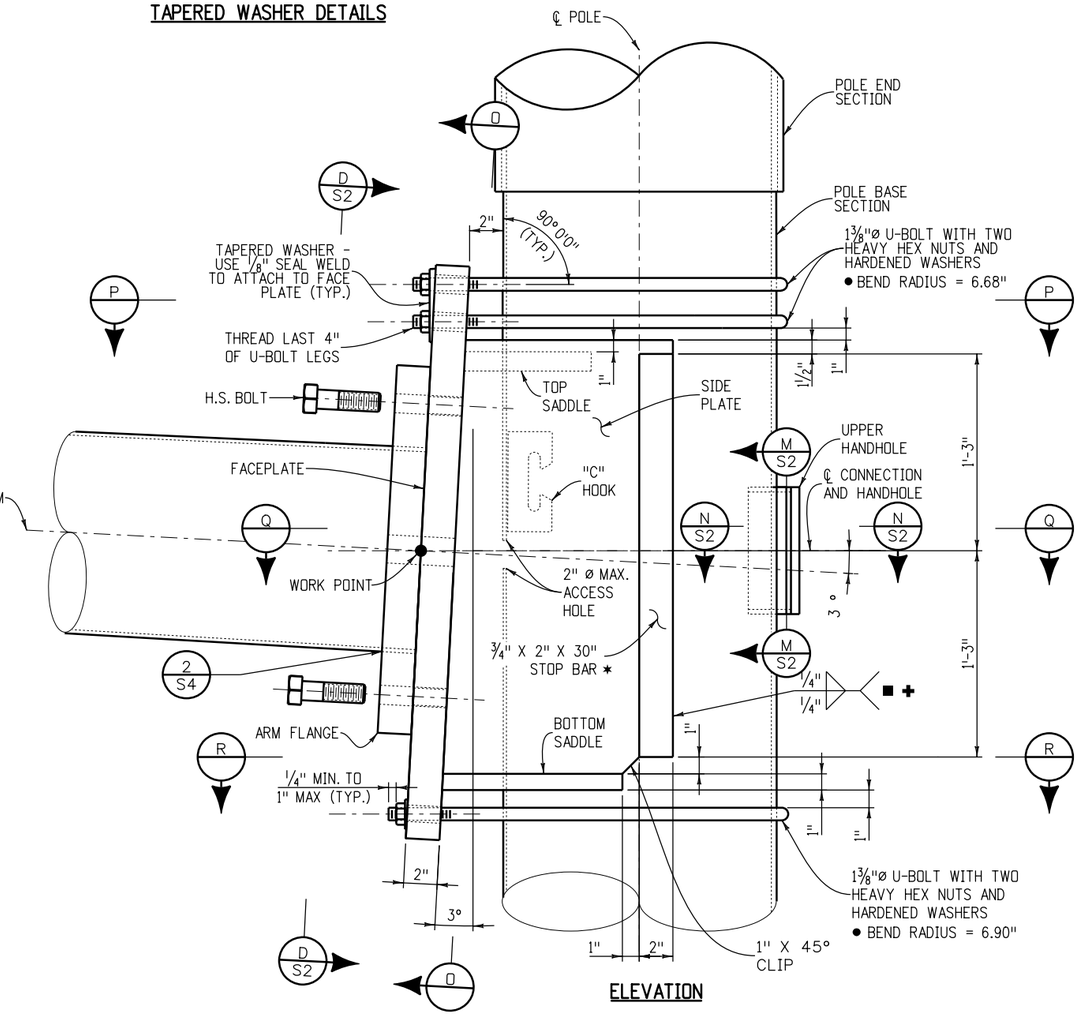

ELEVATION

Computer File Information		Sheet Revisions	
Creation Date: 07-04-12 Initials: LAW		Date:	Comments
Last Modification Date: 07-04-12 Initials: LAW	R-X		
Full Path: www.coloradodot.info/business/designsupport	R-X		
Drawing File Name: Sheet_S-614-40A_3of5.dgn	R-X		
CAD Ver.: MicroStation V8 Scale: Not to Scale Units: English	R-X		

Colorado Department of Transportation
4201 East Arkansas Avenue
Denver, Colorado 80222
Phone: (303) 757-9543
Fax: (303) 757-9219
Safety & Traffic Engineering Branch KCM/RLO

ALTERNATE TRAFFIC SIGNAL INSTALLATION DETAILS

Issued By: Safety & Traffic Engineering Branch July 4, 2012

STANDARD PLAN NO.

S-614-40A

Sheet No. 3 of 4

SOCKET WELD DATA					
	ARM LENGTH (FT.)	W_1 (IN.)	W_2 (IN.)	E (IN.)	θ (DEG.)
MAST ARMS	25	0.2391	0.285	0.183	40
	35	0.2391	0.285	0.183	40
	45	0.3125	0.372	0.239	40
	55	0.3125	0.372	0.239	40
POLE	ALL	0.3125	0.372	0.239	40
LUMINAIRE ARMS	ALL	0.1793	0.214	0.138	40

BACKING RING WELD DATA					
	ARM LENGTH (FT.)	W_1 (IN.)	W_2 (IN.)	E (IN.)	θ (DEG.)
MAST ARMS	25	0.1196	0.489	0.289	14
	35	0.1196	0.489	0.289	14
	45	0.1566	0.563	0.385	16
	55	0.1566	0.563	0.385	16
POLE	ALL	0.1566	0.563	0.385	16
LUMINAIRE ARMS	ALL	0.0897	0.429	0.212	12

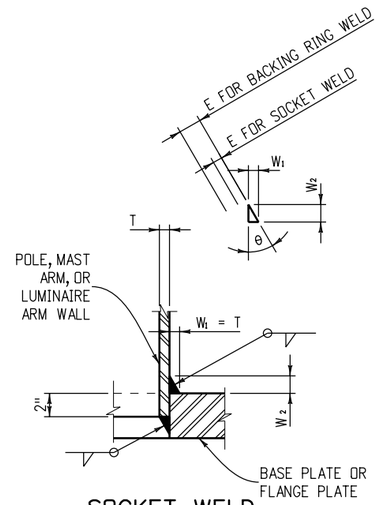

SOCKET WELD

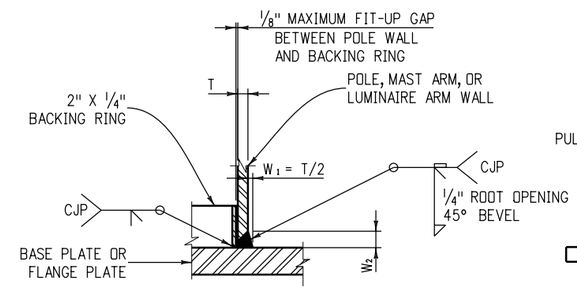

BACKING RING WELD

DETAIL 2/S2 2/S3

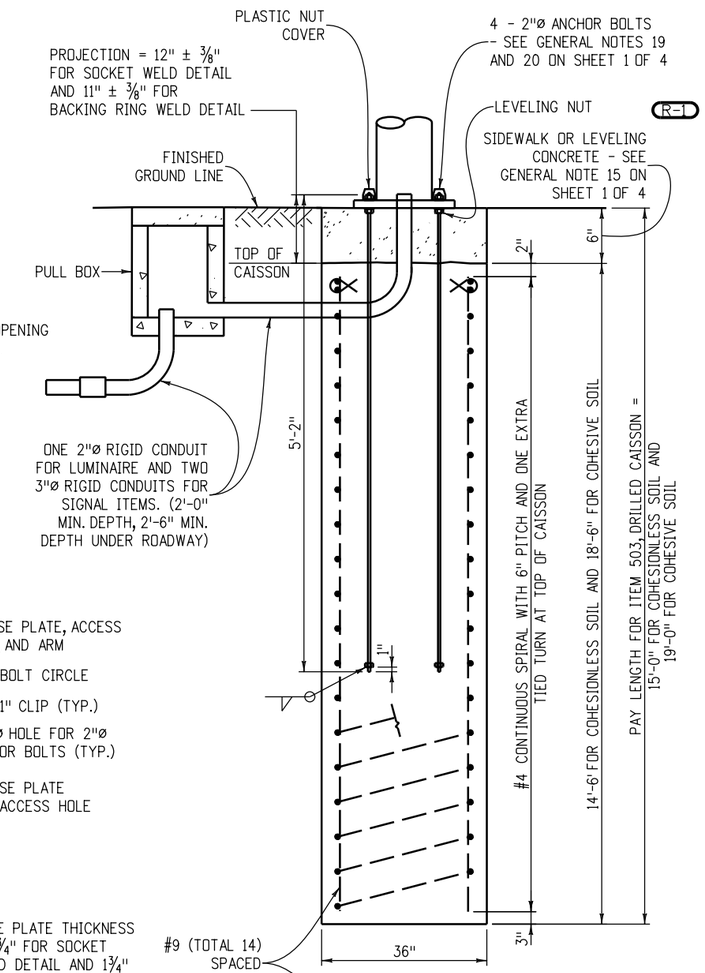

TRAFFIC SIGNAL POLE CAISSON

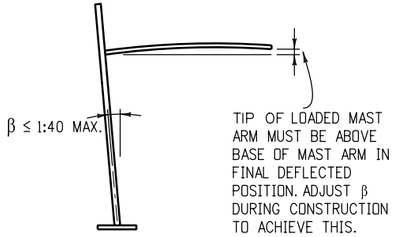

CONSTRUCTION REQUIREMENTS

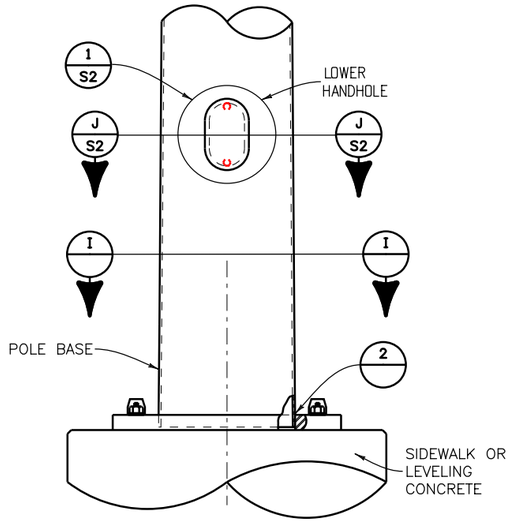

BASE PLATE DETAIL

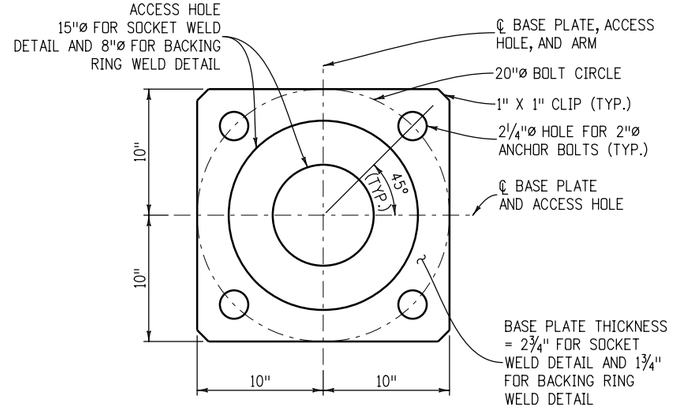

SECTION I

Computer File Information			Sheet Revisions	
Creation Date: 07-04-12	Initials: LAW		Date:	Comments
Last Modification Date: 09-25-12	Initials: LAW	R-1	9-25-12	Correct sheet references
Full Path: www.coloradodot.info/business/designsupport		R-X		
Drawing File Name: Sheet_S-614-40A_4of5.dgn		R-X		
CAD Ver.: MicroStation V8 Scale: Not to Scale Units: English		R-X		

Colorado Department of Transportation
4201 East Arkansas Avenue
Denver, Colorado 80222
Phone: (303) 757-9543
Fax: (303) 757-9219
Safety & Traffic Engineering Branch KCM/RLO

ALTERNATE TRAFFIC SIGNAL INSTALLATION DETAILS

Issued By: Safety & Traffic Engineering Branch July 4, 2012

STANDARD PLAN NO.

S-614-40A

Sheet No. 4 of 4