GENERAL NOTES

ALL WORK SHALL BE DONE IN ACCORDANCE WITH THE COLORADO DEPARTMENT OF TRANSPORTATION (CDOT) 2005 STANDARD SPECIFICATIONS FOR ROAD AND BRIDGE CONSTRUCTION, APPLICABLE TO THE PROJECT, AS REVISED BY CURRENT STANDARD SPECIAL PROVISIONS.

EXCEPT AS SHOWN IN THE PLANS, STRUCTURE EXCAVATION AND BACKFILL SHALL BE IN ACCORDANCE WITH M-206-2.

THE CONTRACTOR SHALL BE RESPONSIBLE FOR THE DESIGN AND CONSTRUCTION OF THE REINFORCED MSE WALLS BASED UPON THESE DRAWINGS AND PROJECT SPECIFICATION REVISION OF SECTION 206 AND 504 - CONCRETE BLOCK FACING MSE WALLS.

EXPANSION JOINT MATERIAL SHALL MEET AASHTO SPECIFICATION M-213.

ALL EXPOSED CONCRETE EDGES SHALL HAVE A ¾" CHAMFER UNLESS DETAILED OR OTHERWISE NOTED.

ALL STRUCTURAL CONCRETE SHALL CONFORM TO CEMENTITIOUS MATERIALS REQUIREMENTS CLASS 1, CORRESPONDING TO SULFATE EXPOSURE CLASS 1.

A STRUCTURAL CONCRETE COATING WILL BE REQUIRED ON ALL EXPOSED CONCRETE SURFACES TO 1'-0" BELOW FINISHED GRADE. THE COLOR SHALL BE EQUIVALENT TO FEDERAL STANDARD 595B, COLOR NO. 37769. SAMPLES SHALL BE SUBMITTED TO THE ENGINEER IN ACCORDANCE WITH SECTION 601.14.

THE BLOCK FACING COLOR SHALL BE EQUIVALENT TO FEDERAL STANDARD 595B, COLOR NO. 30117. SAMPLES SHALL BE SUBMITTED TO THE ENGINEER IN ACCORDANCE WITH THE PROJECT SPECIAL REVISION 206 & 504 - CONCRETE BLOCK FACING MSE WALLS.

THE TOP OF LEVELING PAD ELEVATIONS SHOWN ARE THE HIGHEST ALLOWABLE ELEVATIONS. THE CONCRETE LEVELING PAD SHALL BE STEPPED TO ACCOMMODATE THE DIMENSIONS OF THE BLOCK FACING. IN NO CASE SHALL THE TOP OF THE LEVELING PAD BE LESS THAN 1'-6" FROM FINISHED GRADE AT THE FRONT FACE.

GRADE 60 REINFORCING STEEL IS REQUIRED.

ALL REINFORCING STEEL SHALL BE BLACK (NON-COATED) UNLESS OTHERWISE NOTED. ALL REINFORCING SHALL HAVE 2" CLEAR COVER UNLESS OTHERWISE NOTED.

Ⓔ DENOTES EPOXY-COATED REINFORCING STEEL.

THE STOCK LENGTH USED FOR ALL REINFORCING IS 60 FEET.

THE FOLLOWING TABLE GIVES THE MINIMUM CLASS B LAP SPLICE LENGTH FOR EPOXY COATED REINFORCING BARS PLACED IN ACCORDANCE WITH SUBSECTION 602.06. THESE SPLICE LENGTHS SHALL BE INCREASED BY 25% FOR BARS SPACED AT LESS THAN 6" ON CENTER.

BAR SIZE	#4	#5	#6	#7	#8	#9	#10	#11
SPLICE LENGTH FOR CLASS D CONCRETE	1'-3"	1'-6"	1'-10"	2'-2"	3'-8"	4'-8"	5'-11"	7'-3"

WHEN THE CONTRACTOR ELECTS TO SUBSTITUTE EPOXY COATED REINFORCEMENT FOR BLACK REINFORCING BARS, THE MINIMUM LAP SPLICE SHALL BE AS DESCRIBED ABOVE.

THE FOLLOWING TABLE GIVES THE MINIMUM CLASS B LAP SPLICE LENGTH FOR BLACK REINFORCING BARS PLACED IN ACCORDANCE WITH SUBSECTION 602.06. THESE SPLICE LENGTHS SHALL BE INCREASED BY 25% FOR BARS SPACED AT LESS THAN 6" ON CENTER.

BAR SIZE	#4	#5	#6	#7	#8	#9	#10	#11
SPLICE LENGTH FOR CLASS D CONCRETE	1'-0"	1'-4"	1'-7"	1'-10"	2'-5"	3'-1"	3'-11"	4'-10"

SOIL BORING LOCATIONS ARE SHOWN IN PLAN ON WALL GENERAL LAYOUT SHEETS. ALSO SEE GEOTECHNICAL PLANS FOR BORING LOG INFORMATION.

THE CONTRACTOR SHALL BE RESPONSIBLE FOR THE STABILITY OF THE STRUCTURE DURING CONSTRUCTION.

T.O. = TOP OF	F.G. = FINISHED GRADE
B.F. = BACK FACE	HCL = HORIZONTAL CONTROL LINE
BOT. = BOTTOM	I.D. = INSIDE DIAMETER
BRG. = BEARING	I.F. = INSIDE FACE
E.F. = EACH FACE	O.F. = OUTSIDE FACE
EQ. = EQUAL	SPA. = SPACING

THE INFORMATION SHOWN ON THESE PLANS CONCERNING THE TYPE AND LOCATION OF UNDERGROUND UTILITIES IS NOT GUARANTEED TO BE ACCURATE OR ALL INCLUSIVE. THE CONTRACTOR IS RESPONSIBLE FOR MAKING HIS OWN DETERMINATION AS TO THE TYPE AND LOCATION OF UNDERGROUND UTILITIES AS MAY BE NECESSARY TO AVOID DAMAGE THERETO. THE CONTRACTOR SHALL CONTACT THE UTILITY NOTIFICATION CENTER OF COLORADO AT 1-800-922-1987 AT LEAST 2 DAYS (NOT INCLUDING THE DAY OF NOTIFICATION) PRIOR TO ANY EXCAVATION OR OTHER EARTHWORK.

REINFORCED CONCRETE PIPE AND INLETS

REINFORCED CONCRETE PIPE AND INLETS BEHIND MSE WALLS SHALL BE PLACED AT THE SAME TIME AS THE WALL AND MECHANICALLY REINFORCED SOIL. THE MSE WALL SYSTEM MANUFACTURER SHALL CONSIDER AND INCORPORATE THE PIPE AND INLETS INTO THE DESIGN OF THE MSE WALL SYSTEM, AND PROVIDE ALL NECESSARY CONNECTION HARDWARE AND DETAILS. SHOP DRAWINGS FOR WALLS SHALL INDICATE ALL THE NECESSARY INSTALLATION INFORMATION AT THESE LOCATIONS.

DESIGN DATA

AASHTO, 17TH EDITION

DESIGN METHOD:
SERVICE LOAD DESIGN - (MECHANICALLY STABILIZED EARTH WALLS)

DESIGN LOADS (MECHANICALLY STABILIZED EARTH WALLS):
UNIT WEIGHT OF CONCRETE = 150 pcf
VERTICAL EARTH LOAD = 125 pcf
EQUIVALENT FLUID PRESSURE = 35 pcf
LIVE LOAD SURCHARGE = 2'-0" OF SOIL
VEHICULAR HORIZONTAL IMPACT = 10 k

DESIGN LOADS (CAST-IN-PLACE WALLS)
UNIT WEIGHT OF CONCRETE = 150 pcf
EQUIVALENT FLUID PRESSURE = 35 pcf
ALLOWABLE BEARING PRESSURE = 3500 psf

FACTORS OF SAFETY FOR STATIC LOADING CONDITIONS (ALL WALLS):
SLIDING = 1.5
OVERTURNING = 2
PULLOUT = 1.5

FOUNDATION SOILS:
ϕ = 28°
TAN ϕ (SOIL - SOIL)
ALLOWABLE BEARING = 3500 psf

BACKFILL (CLASS 1) (ALL WALLS):
ϕ = 34°
Ka = 0.2827

REINFORCED CONCRETE:
CONCRETE CLASS D (WALL): F'c = 4500 psi
REINFORCING STEEL: Fy = 60,000 psi

STRUCTURAL STEEL:
STRUCTURAL TUBING: ASTM A500 GRADE B
BAR & PLATE: AASHTO M-270 (ASTM A709) GRADE 36 Fy=36,000 PSI

INDEX OF DRAWINGS

W1 GENERAL INFORMATION
W2 SUMMARY OF QUANTITIES
W3 RETAINING WALL LOCATION MAP
W4 RETAINING WALL LAYOUT LINE GEOMETRY (1 of 2)
W5 RETAINING WALL LAYOUT LINE GEOMETRY (2 of 2)
W6 EAST LOWER RETAINING WALL GENERAL LAYOUT
W7 EAST UPPER RETAINING WALL GENERAL LAYOUT
W8 WEST LOWER RETAINING WALL GENERAL LAYOUT
W9 WEST UPPER RETAINING WALL GENERAL LAYOUT
W10 LOWER RETAINING WALL SECTIONS & DETAILS
W11 UPPER RETAINING WALL SECTIONS & DETAILS
W12 UPPER & LOWER RETAINING WALL MISCELLANEOUS DETAILS
W13 LOWER WALL PEDESTRIAN RAILING DETAILS (1 OF 2)
W14 LOWER WALL PEDESTRIAN RAILING DETAILS (2 OF 2)
W15 EB ON RAMP RETAINING WALL GENERAL LAYOUT
W16 EB OFF RAMP RETAINING WALL GENERAL LAYOUT
W17 EB ON & OFF RAMP RAIL SLAB TYPICAL SECTIONS
W18 EB ON & OFF RAMP RAIL SLAB DETAILS
W19 EB ON & OFF RAMP MSE WALL DETAILS (1 OF 3)
W20 EB ON & OFF RAMP MSE WALL DETAILS (2 OF 3)
W21 EB ON & OFF RAMP MSE WALL DETAILS (3 OF 3)
W22 BRIDGE RAIL TYPE 7 TRANSITION DETAILS
W23 EB ON & OFF-RAMP PEDESTRIAN RAILING
W24 RAIL MOUNTED SIGN SUPPORT
W25 MSE RETAINING WALL EXCAVATION & BACKFILL DETAILS

WALL DESCRIPTIONS

EAST LOWER RETAINING WALL
CAST-IN-PLACE CONCRETE ON SPREAD FOOTING
LENGTH = 228'-0", HEIGHT VARIES FROM 2'-4" TO 4'-7"
LOCATED ON EAST SIDE OF EDWARDS ACCESS RD,
UNDER EXISTING I-70 BRIDGES

EAST UPPER RETAINING WALL, STR. NO. WALL-F-10-O
CAST-IN-PLACE CONCRETE ON SPREAD FOOTING
LENGTH = 339'-0", HEIGHT VARIES FROM 3'-0" TO 15'-7"
LOCATED ON EAST SIDE OF EDWARDS ACCESS RD,
UNDER EXISTING I-70 BRIDGES

WEST LOWER RETAINING WALL
CAST-IN-PLACE CONCRETE ON SPREAD FOOTING
LENGTH = 210'-0", HEIGHT VARIES FROM 2'-1" TO 4'-6"
LOCATED ON WEST SIDE OF EDWARDS ACCESS RD,
UNDER EXISTING I-70 BRIDGES

WEST UPPER RETAINING WALL, STR. NO. WALL-F-10-N
CAST-IN-PLACE CONCRETE ON SPREAD FOOTING
LENGTH = 312'-0", HEIGHT VARIES FROM 3'-7" TO 9'-6"
LOCATED ON EAST SIDE OF EDWARDS ACCESS RD,
UNDER EXISTING I-70 BRIDGES

EB ON RAMP RETAINING WALL, STR. NO. WALL-F-10-Q
MECHANICALLY STABILIZED EARTH (MSE),
WITH BLOCK FACING
LENGTH = 428-0", HEIGHT VARIES FROM 4'-5" TO 18'-0"
LOCATED ON SOUTH SIDE OF EB ON RAMP

EB OFF RAMP RETAINING WALL, STR. NO. WALL-F-10-P
MECHANICALLY STABILIZED EARTH (MSE),
WITH BLOCK FACING
LENGTH = 228-0", HEIGHT VARIES FROM 6'-7" TO 11'-3"
LOCATED ON WEST SIDE OF EDWARDS ACCESS RD,
AT END OF EB OFF RAMP

EAGLE COUNTY

FELSBURG HOLT & ULLEVIG

CROSS REFERENCE DRAWING NUMBER
(IF BLANK, REFERENCE IS TO SAME SHEET)

SECTION OR DETAIL IDENTIFICATION

Revision Dates (Preliminary Stage Only)

Design =	INITIAL	DATE	Detail	INITIAL	DATE	Our
Designed By	PRS	08-08	Detailed By	RAD	08-08	Quantities By
Checked By			Checked By	PRS	08-08	Checked By

Print Date: 10/27/2009		Sheet Revisions	
Drawing File Name: 06193WALLINF01.dgn		Date:	Comments	Init.
Horiz. Scale: 1:1	Vert. Scale: As Noted	R-X		
Unit Information	Unit Leader Initials			

Colorado Department of Transportation
CDOT
714 Grand Avenue, P.O. Box 298
Eagle, CO 81631
Phone: 970-328-6385 FAX: 970-328-2368
Region 3 MLM

As Constructed
No Revisions: 6-6-2011
Revised:
Void:

EDWARDS INTERCHANGE UPGRADE
RETAINING WALL
GENERAL INFORMATION

Designer:	P. STEIN	Structure Numbers	WALL-F-10-P, WALL-F-10-Q
Detailer:	R. DILLON		WALL-F-10-N, WALL-F-10-O
Sheet Subset:	WALL	Subset Sheets:	W1 of 25

Project No./Code
ES3 0702-297
17303
Sheet Number 81

SUMMARY OF QUANTITIES

ITEM NO.	DESCRIPTION	UNIT	EAST LOWER RETAINING WALL	EAST UPPER RETAINING WALL WALL-F-10-O	WEST LOWER RETAINING WALL	WEST UPPER RETAINING WALL WALL-F-10-N	EB ON RAMP RETAINING WALL WALL-F-10-Q	EB OFF RAMP RETAINING WALL WALL-F-10-P	TOTALS
202	REMOVAL OF SLOPE AND DITCH PAVING	SY	-	320	-	326	-	-	646
206	STRUCTURE EXCAVATION	CY	317	2,562	233	1,074	1,883	573	6,642
206	STRUCTURE BACKFILL (CLASS 1)	CY	115	1,646	77	590	3,542	1,299	7,269
206	MECHANICAL REINFORCEMENT OF SOIL	CY	-	-	-	-	2,080	781	2,861
206	SHORING (AREA 1)	LS	-	-	-	1	-	-	1
206	SHORING (AREA 2)	LS	-	1	-	-	-	-	1
504	BLOCK FACING	SF	-	-	-	-	4,438	1,930	6,368
507	CONCRETE SLOPE AND DITCH PAVING (REINFORCED)	CY	-	32	-	31	-	-	63
514	PEDESTRIAN RAILING (STEEL)	LF	159	-	159	-	175	219	712
601	CONCRETE CLASS D (WALL)	CY	67	232	60	181	182	94	816
601	STRUCTURAL CONCRETE COATING	SY	83	162	76	149	434	231	1,135
602	REINFORCING STEEL	LB	-	22,945	-	17,095	-	-	40,040
602	REINFORCING STEEL (EPOXY COATED)	LB	6,450	-	5,875	-	24,210	12,380	48,915
603	8 INCH PLASTIC PIPE	LF	-	-	-	100	-	-	100
604	INLET (SPECIAL)	EA	-	-	-	1	-	-	1
606	BRIDGE RAIL TYPE 7	LF	-	-	-	-	441	241	681
609	GUTTER TYPE 2 (SPECIAL)	LF	-	160	-	135	-	-	295

See Summary of Approximate Quantities Sheets

EAGLE COUNTY

FELSBURG HOLT & ULLEVIG

Print Date: 10/27/2009
Drawing File Name: 06193WALLSUM01.dgn
Horiz. Scale: 1:1 Vert. Scale: As Noted
Unit Information Unit Leader Initials

R-X

Sheet Revisions

Date:	Comments	Init.

Colorado Department of Transportation
DOT
714 Grand Avenue, P.O. Box 298
Eagle, CO 81631
Phone: 970-328-6385 FAX: 970-328-2368
Region 3 MLM

As Constructed
No Revisions:
Revised: 6-6-2011
Void:

EDWARDS INTERCHANGE UPGRADE
RETAINING WALL
SUMMARY OF QUANTITIES

Designer: P. STEIN
Detailer: R. DILLON
Sheet Subset: WALL
Structure Numbers: WALL-F-10-P, WALL-F-10-O; WALL-F-10-N, WALL-F-10-Q
Subset Sheets: W2 of 25

Project No./Code
ES3 0702-297
17303
Sheet Number 82

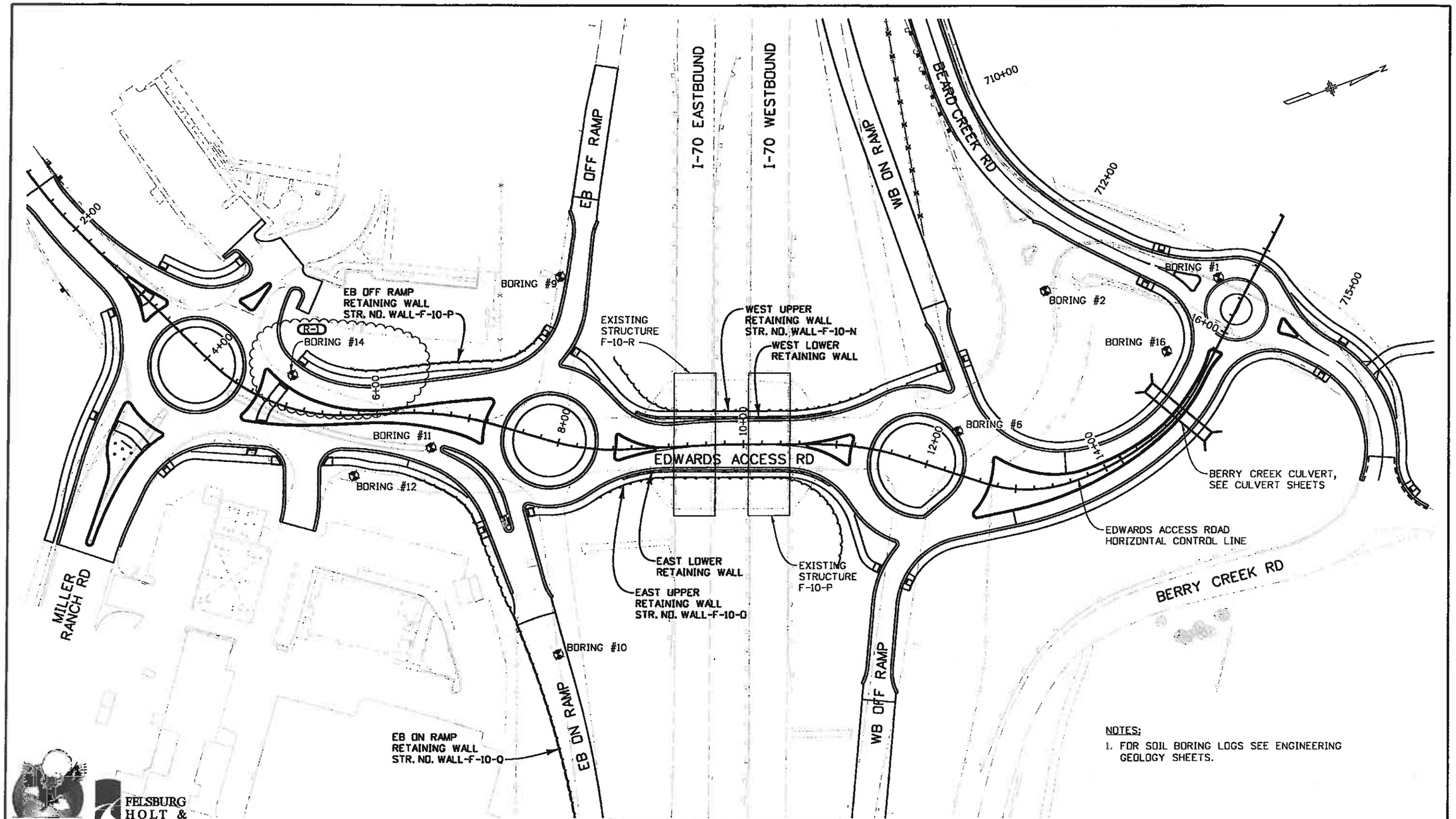

NOTES:

1. FOR SOIL BORING LOGS SEE ENGINEERING GEOLOGY SHEETS.

EAGLE COUNTY

FELSBURG HOLT & ULLEVIG

RETAINING WALL LOCATION MAP

Design	INITIAL	DATE	Detail	INITIAL	DATE	Quantities	INITIAL	DATE
Designed By	PRS	08-08	Detailed By	RAD	08-08	Quantities By		
Checked By			Checked By	PRS	08-08	Checked By		

Revision Dates (Preliminary Stage Only)

Print Date: 5/10/2010	
Drawing File Name: 06193WALLSLM01.dgn	
Horiz. Scale: 1:100	Vert. Scale: As Noted
Unit Information	Unit Leader Initials

R-1

Sheet Revisions		
Date:	Comments	Init.
5/10/10	REVISED SB ENTRANCE TO MRR ROUNDABOUT	DKH

Colorado Department of Transportation

DOT DEPARTMENT OF TRANSPORTATION

714 Grand Avenue, P.O. Box 298
Eagle, CO 81631
Phone: 970-328-6385 FAX: 970-328-2368

Region 3 MLM

As Constructed
No Revisions:
Revised: 6-6-2011
Void:

EDWARDS INTERCHANGE UPGRADE
RETAINING WALL
LOCATION MAP

Designer:	P. STEIN	Structure Numbers	WALL-F-10-P, WALL-F-10-Q
Detailer:	T. SMITH		WALL-F-10-N, WALL-F-10-O
Sheet Subset:	WALL	Subset Sheets:	W3 of 25

Project No./Code
ES3 0702-297
17303
Sheet Number 83X

EB ON RAMP WALL HCL

		Station	Northing	Easting
Element: Circular				
PC		0+00.00	62940.0529	93728.197
PI		0+26.38	62962.7288	93745.2559
PCC		0+56.47	62980.6429	93767.2625
Radius:		232.792		
Delta:		13°53'58.46"	Right	
Degree of Curvature (Arc):		24°36'44.88"		
Length:		56.474		
Tangent:		28.376		
Tangent Direction:		N 36°57'13.59" E		
Tangent Direction:		N 50°51'12.06" E		
Element: Circular				
PCC		0+56.47	62980.6429	93767.2625
PI		0+76.95	62993.5696	93783.1424
PT		0+95.91	62993.9421	93803.6151
Radius:		59.292		
Delta:		38°06'15.16"	Right	
Degree of Curvature (Arc):		96°38'01.42"		
Length:		39.432		
Tangent:		20.476		
Tangent Direction:		N 50°51'12.06" E		
Tangent Direction:		N 88°57'27.22" E		
Element: Linear				
PT		0+95.91	62993.9421	93803.6151
PI		1+81.90	62995.5067	93889.598
Tangential Direction:		N 88°57'27.22" E		
Tangential Length:		85.997		
Element: Linear				
PI		1+81.90	62995.5067	93889.598
PI		2+05.78	62998.4383	93913.2973
Tangential Direction:		N 82°56'53.60" E		
Tangential Length:		23.88		
Element: Linear				
PI		2+05.78	62998.4383	93913.2973
PC		2+46.33	62999.176	93953.8367
Tangential Direction:		N 88°57'27.22" E		
Tangential Length:		40.546		
Element: Circular				
PC		2+46.33	62999.176	93953.8367
PI		3+53.59	63001.1273	94061.0769
PT		4+60.02	62980.1406	94166.2616
Radius:		993.292		
Delta:		12°19'33.97"	Right	
Degree of Curvature (Arc):		5°46'05.78"		
Length:		213.688		
Tangent:		107.258		
Tangent Direction:		N 88°57'27.22" E		
Tangent Direction:		S 78°42'58.82" E		

EB OFF RAMP WALL HCL

		Station	Northing	Easting
Element: Circular				
PC		0+00.00	63149.0810	93616.4107
PI		0+37.53	63128.1421	93647.5516
PCC		0+69.01	63090.6165	93647.7011
Radius:		70.79		
Delta:		55°51'18.38"	Right	
Degree of Curvature (Arc):		80°56'08.63"		
Length:		69.01		
Tangent:		37.53		
Tangent Direction:		S 56°05'00.25" E		
Tangent Direction:		S 0°13'41.87" E		
Element: Circular				
PCC		0+69.01	63090.6165	93647.7011
PI		0+76.84	63082.7894	93647.7323
PT		0+84.54	63075.3376	93645.3373
Radius:		49.29		
Delta:		18°02'44.47"	Right	
Degree of Curvature (Arc):		116°14'17.48"		
Length:		15.53		
Tangent:		7.83		
Tangent Direction:		S 0°13'41.87" E		
Radial Direction:		W		
Tangent Direction:		S 17°49'02.60" W		
Element: Linear				
PT		0+84.54	63075.3376	93645.3373
PC		1+30.17	63031.8882	93631.3727
Tangential Direction:		S 17°49'02.60" W		
Tangential Length:		45.64		
Element: Circular				
PC		1+30.17	63031.8882	93631.3727
PI		1+47.17	63015.7083	93626.1725
PT		1+64.15	62999.1526	93622.3335
Radius:		408.71		
Delta:		4°45'44.03"	Left	
Degree of Curvature (Arc):		14°01'07.49"		
Length:		33.97		
Tangent:		17.00		
Tangent Direction:		S 17°49'02.60" W		
Tangent Direction:		S 13°03'18.57" W		
Element: Linear				
PT		1+64.15	62999.1526	93622.3335
PC		2+54.63	62911.0032	93601.8932
Tangential Direction:		S 13°03'18.57" W		
Tangential Length:		90.49		
Element: Circular				
PC		2+54.63	62911.0032	93601.8932
PI		2+79.28	62886.9955	93596.3262
PT		3+00.00	62878.0055	93573.3797
Radius:		46.79		
Delta:		55°33'02.37"	Right	
Degree of Curvature (Arc):		122°26'54.94"		
Length:		45.37		
Tangent:		24.65		
Tangent Direction:		S 13°03'18.57" W		
Tangent Direction:		S 68°36'20.94" W		

Revision Dates (Preliminary Stage Only)

Design =	INITIAL	DATE
Designed By	PRS	08-08
Checked By		

Detail	INITIAL	DATE
Detailed By	RAD	08-08
Checked By	PRS	08-08

Qua | DATE | Quantities By | Checked By

EAGLE COUNTY

FELSBURG HOLT & ULLEVIG

Print Date: 10/27/2009
Drawing File Name: 06193WALLGEM01.dgn
Horiz. Scale 1:1 — Vert. Scale: As Noted
Unit Information — Unit Leader Initials

R-X

Sheet Revisions		
Date:	Comments	Init.

Colorado Department of Transportation
DOT
714 Grand Avenue, P.O. Box 298
Eagle, CO 81631
Phone: 970-328-6385 FAX: 970-328-2368
Region 3 MLM

As Constructed
No Revisions: 6-6-2011
Revised:
Void:

EDWARDS INTERCHANGE UPGRADE
RETAINING WALL
LAYOUT LINE GEOMETRY (1 OF 2)

Designer:	R. DILLON	Structure Numbers	WALL-F-10-P
Detailer:	R. DILLON		WALL-F-10-Q
Sheet Subset:	WALL	Subset Sheets:	W4 of 25

Project No./Code
ES3 0702-297
17303
Sheet Number 84

EAST UPPER WALL HCL

	Station	Northing	Easting
Element: Circular			
PC	0+00.00	63334.8737	93992.2456
PI	1+25.42	63432.3598	93913.3417
PT	1+50.53	63314.8002	93869.6483
Radius:	71.50		
Delta:	120°37'30.54"	Left	
Degree of Curvature (Arc):	80°08'02.25"		
Length:	150.53		
Tangent:	125.42		
Tangent Direction:	N 38°59'10.49" W		
Tangent Direction:	S 20°23'18.97" W		
Element: Linear			
PT	1+50.53	63314.8002	93869.6483
PI	2+52.36	63219.3523	93834.1731
Tangential Direction:	S 20°23'18.97" W		
Tangential Length:	101.83		
Element: Linear			
PI	2+52.36	63219.3523	93834.1731
PC	2+65.51	63207.0162	93829.6027
Tangential Direction:	S 20°19'45.80" W		
Tangential Length:	13.16		
Element: Circular			
PC	2+65.51	63207.0162	93829.6027
PI	3+14.03	63161.5166	93812.7453
PT	3+59.00	63115.2468	93827.3568
Radius:	141.50		
Delta:	37°51'17.63"	Left	
Degree of Curvature (Arc):	40°29'30.18"		
Length:	93.49		
Tangent:	48.52		
Tangent Direction:	S 20°19'45.80" W		
Tangent Direction:	S 17°31'31.83" E		

EAST LOWER WALL HCL

	Station	Northing	Easting
Element: Circular			
PC	0+80.00	63376.0030	93915.4927
PI	1+18.19	63363.9570	93879.2500
PT	1+51.21	63328.1439	93865.9814
Radius:	79.56		
Delta:	51°17'07.18"	Left	
Degree of Curvature (Arc):	72°00'53.66"		
Length:	71.22		
Tangent:	38.19		
Tangent Direction:	S 71°36'52.98" W		
Tangent Direction:	S 20°19'45.80" W		
Element: Linear			
PT	1+51.21	63328.1437	93865.9814
PI	1+54.72	63324.8373	93864.8214
Tangential Direction:	S 19°19'56.48" W		
Tangential Length:	3.50		
Element: Linear			
PI	1+54.72	63324.8373	93864.8214
PI	1+70.34	63310.1906	93859.4020
Tangential Direction:	S 20°18'17.36" W		
Tangential Length:	15.62		
Element: Linear			
PI	1+70.34	63310.1899	93859.4017
PI	1+85.74	63295.7536	93854.0377
Tangential Direction:	S 20°23'00.61" W		
Tangential Length:	15.40		
Element: Linear			
PI	1+85.74	63295.7536	93854.0377
PI	2+34.89	63249.7037	93836.8465
Tangential Direction:	S 20°28'17.22" W		
Tangential Length:	49.15		
Element: Linear			
PI	2+34.89	63249.7037	93836.8465
PI	2+50.38	63235.1508	93831.5471
Tangential Direction:	S 20°00'31.13" W		
Tangential Length:	15.49		
Element: Linear			
PI	2+50.38	63235.1508	93831.5471
PI	2+65.77	63220.7358	93826.1543
Tangential Direction:	S 20°30'41.52" W		
Tangential Length:	15.39		
Element: Linear			
PI	2+65.77	63220.7358	93826.1543
PC	2+77.44	63209.7956	93822.1010
Tangential Direction:	S 20°19'45.97" W		
Tangential Length:	11.67		
Element: Circular			
PC	2+77.44	63209.7956	93822.1010
PI	3+13.39	63176.0835	93809.6108
PT	3+48.00	63140.3785	93813.8140
Radius:	149.50		
Delta:	27°02'35.84"	Left	
Degree of Curvature (Arc):	38°19'29.77"		
Length:	70.56		
Tangent:	35.95		
Tangent Direction:	S 20°19'45.80" W		
Tangent Direction:	S 6°42'50.04" E		

WEST UPPER WALL HCL

	Station	Northing	Easting
Element: Linear			
POB	0+00.00	63192.2286	93677.2184
PC	0+51.77	63206.8522	93726.8808
Tangential Direction:	N 73°35'32.47" E		
Tangential Length:	51.77		
Element: Circular			
PC	0+51.77	63206.8522	93726.8808
PI	0+82.77	63215.6090	93756.6191
PT	1+09.20	63244.7236	93767.2672
Radius:	61.50		
Delta:	53°30'11.80"	Left	
Degree of Curvature (Arc):	93°09'49.93"		
Length:	57.43		
Tangent:	31.00		
Tangent Direction:	N 73°35'32.47" E		
Tangent Direction:	N 20°05'20.67" E		
Element: Linear			
PT	1+09.20	63244.7236	93767.2672
PC	2+20.94	63349.6627	93805.6468
Tangential Direction:	N 20°05'20.67" E		
Tangential Length	111.74		
Element: Circular			
PC	2+20.94	63349.6627	93805.6468
PI	2+76.24	63401.5974	93824.6410
PT	3+29.00	63456.0740	93815.1390
Radius:	206.50		
Delta:	29°58'59.56"	Left	
Degree of Curvature (Arc):	27°44'46.10"		
Length:	108.06		
Tangent:	55.30		
Tangent Direction:	N 20°05'20.67" E		
Tangent Direction:	N 9°53'38.89" W		

WEST LOWER WALL HCL

	Station	Northing	Easting
Element: Circular			
PC	0+80.00	63186.1423	93736.3602
PI	1+05.57	63198.6456	93758.6654
PT	1+29.00	63222.6234	93767.5491
Radius:	69.50		
Delta:	40°23'51.07"	Left	
Degree of Curvature	82°26'09.38"		
Length:	49.01		
Tangent:	25.57		
Tangent Direction:	N 60°43'36.87"		
Tangent Direction:	N 20°19'45.80"		
Element: Linear			
PT	1+29.00	63222.6234	93767.5491
PI	1+47.82	63240.2667	93774.0894
Tangential Direction.	N 20°20'22.62"		
Tangential Length:	18.82		
Element: Linear			
PI	1+47.82	63240.2667	93774.0894
PI	1+63.42	63254.8963	93779.5126
Tangential Direction:	N 20°20'22.83"		
Tangential Length:	15.60		
Element: Linear			
PI	1+63.42	63254.8963	93779.5126
PI	1+78.95	63269.4431	93784.9259
Tangential Direction:	N 20°24'42.30"		
Tangential Length:	15.52		
Element: Linear			
PI	1+78.95	63269.4431	93784.9259
PI	2+27.87	63315.3603	93801.8086
Tangential Direction:	N 20°11'14.38"		
Tangential Length:	48.92		
Element: Linear			
PI	2+27.87	63315.3603	93801.8086
PI	2+43.45	63330.0596	93806.9915
Tangential Direction:	N 19°25'21.18"		
Tangential Length:	15.59		
Element: Linear			
PI	2+43.45	63330.0596	93806.9915
PI	2+58.84	63344.5086	93812.2867
Tangential Direction.	N 20°07'35.83"		
Tangential Length.	15.39		
Element: Linear			
PI	2+58.84	63344.5086	93812.2867
PC	2+60.48	63346.0430	93812.8490
Tangential Direction:	N 20°07'34.91"		
Tangential Length:	1.63		
Element: Circular			
PC	2+60.48	63346.0430	93812.8490
PI	2+95.55	63378.9277	93825.0326
PT	3+30.00	63413.9804	93826.1087
Radius:	214.49		
Delta:	18°34'15.86"	Left	
Degree of Curvature	26°42'43.35"		
Length:	69.52		
Tangent:	35.07		
Tangent Direction:	N 20°19'45.80"		
Tangent Direction:	N 1°45'29.94" E		

Revision Dates (Preliminary Stage Only)

Design	INITIAL	DATE	Detail	INITIAL	DATE	Quan	DATE
Designed By	PRS	08-08	Detailed By	RAD	08-08	Quantities By	
Checked By			Checked By	PRS	08-08	Checked By	

EAGLE COUNTY

FELSBURG HOLT & ULLEVIG

Print Date: 10/27/2009
Drawing File Name: 06193WALLGEM01.dgn
Horiz. Scale: 1:1 Vert. Scale: As Noted
Unit Information Unit Leader Initials

R-X

Sheet Revisions		
Date:	Comments	Init.

Colorado Department of Transportation
DOT
714 Grand Avenue, P.O. Box 298
Eagle, CO 81631
Phone: 970-328-6385 FAX: 970-328-2368
Region 3 MLM

As Constructed
No Revisions: 6-6-2011
Revised:
Void:

EDWARDS INTERCHANGE UPGRADE
RETAINING WALL
LAYOUT LINE GEOMETRY (2 OF 2)

Designer:	R. DILLON	Structure Numbers	WALL-F-10-D
Detailer:	R. DILLON		WALL-F-10-N
Sheet Subset:	WALL	Subset Sheets:	W5 of 25

Project No./Code
ES3 0702-297
17303
Sheet Number 85

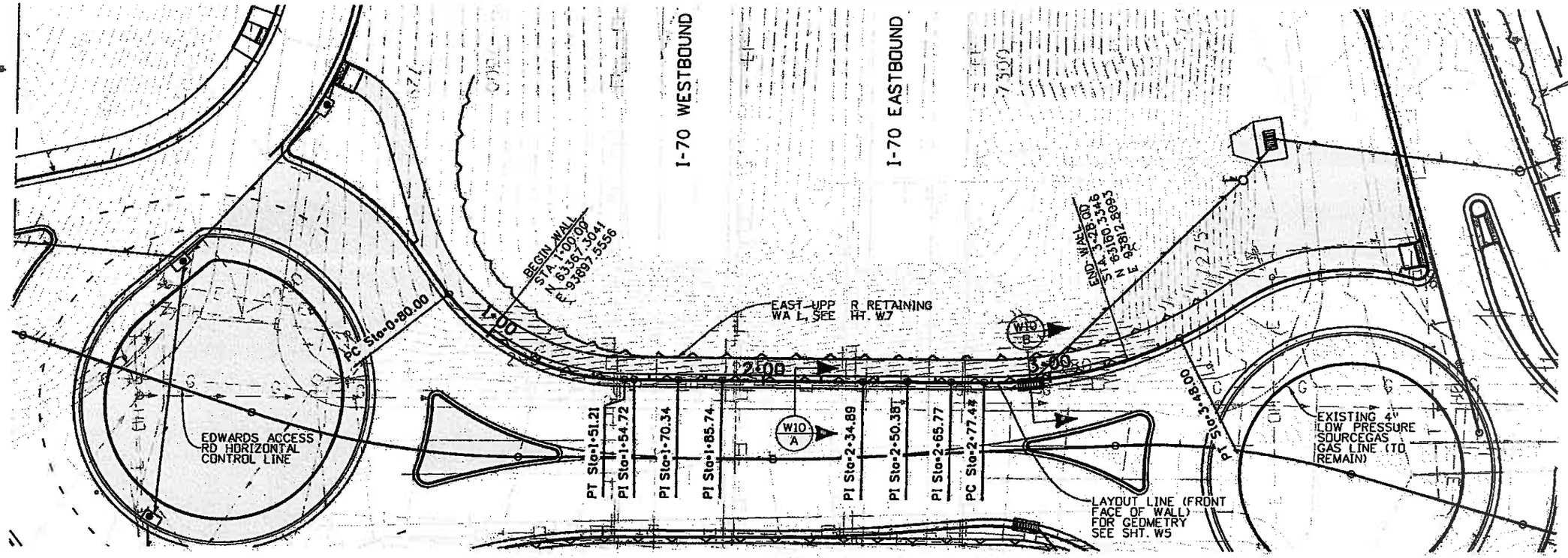

PLAN

NOTES:

1. EXISTING SOIL CONDITIONS BENEATH THE BRIDGE STRUCTURE ARE UNKOWN. GEOTECHNICAL PARAMATERS WERE ESTABLISHED FROM THE NEAREST BORINGS ADJACENT TO THE BRIDGE.

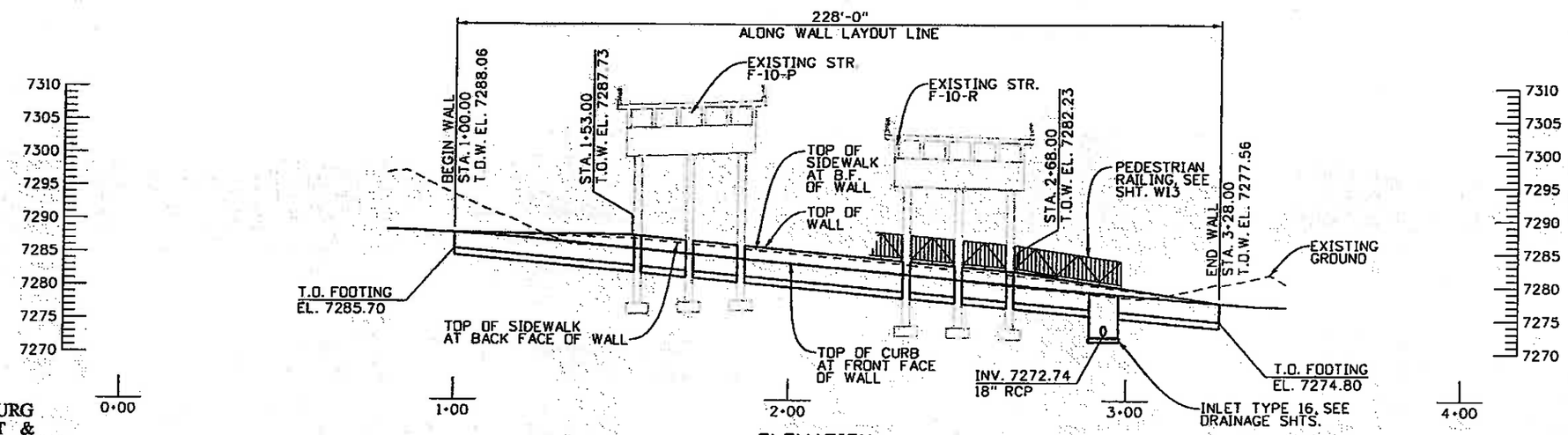

ELEVATION

EAGLE COUNTY

FELSBURG HOLT & ULLEVIG

Design	INITIAL	DATE	Detail	INITIAL	DATE	Quant
Designed By	PRS	08-08	Detailed By	RAD	08-08	Quantities By
Checked By			Checked By	PRS	08-08	Checked By

Revision Dates	(Preliminary Stage Only)	DATE

Print Date: 10/27/2009
Drawing File Name: 06193WALLGLA03.dgn
Horiz. Scale: 1:40 Vert. Scale: As Noted
Unit Information Unit Leader Initials

R-X

Sheet Revisions		
Date:	Comments	Init.

Colorado Department of Transportation
DOT
714 Grand Avenue, P.O. Box 298
Eagle, CO 81631
Phone: 970-328-6385 FAX: 970-328-2368
Region 3 MLM

As Constructed
No Revisions: 6-6-2011
Revised:
Void:

EDWARDS INTERCHANGE UPGRADE
EAST LOWER RETAINING WALL
GENERAL LAYOUT

Designer:	P. STEIN	Structure Numbers	
Detailer:	R. DILLON		
Sheet Subset:	WALL	Subset Sheets:	W6 of 25

Project No./Code
ES3 0702-297
17303
Sheet Number 86

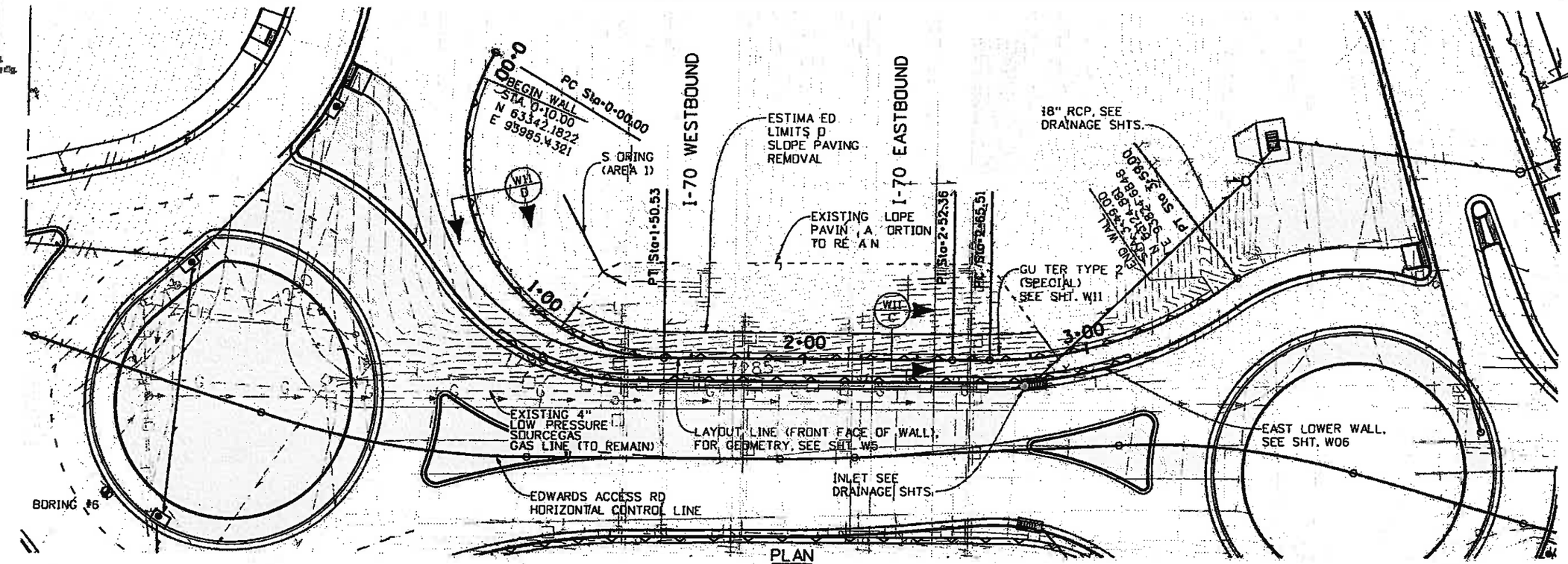

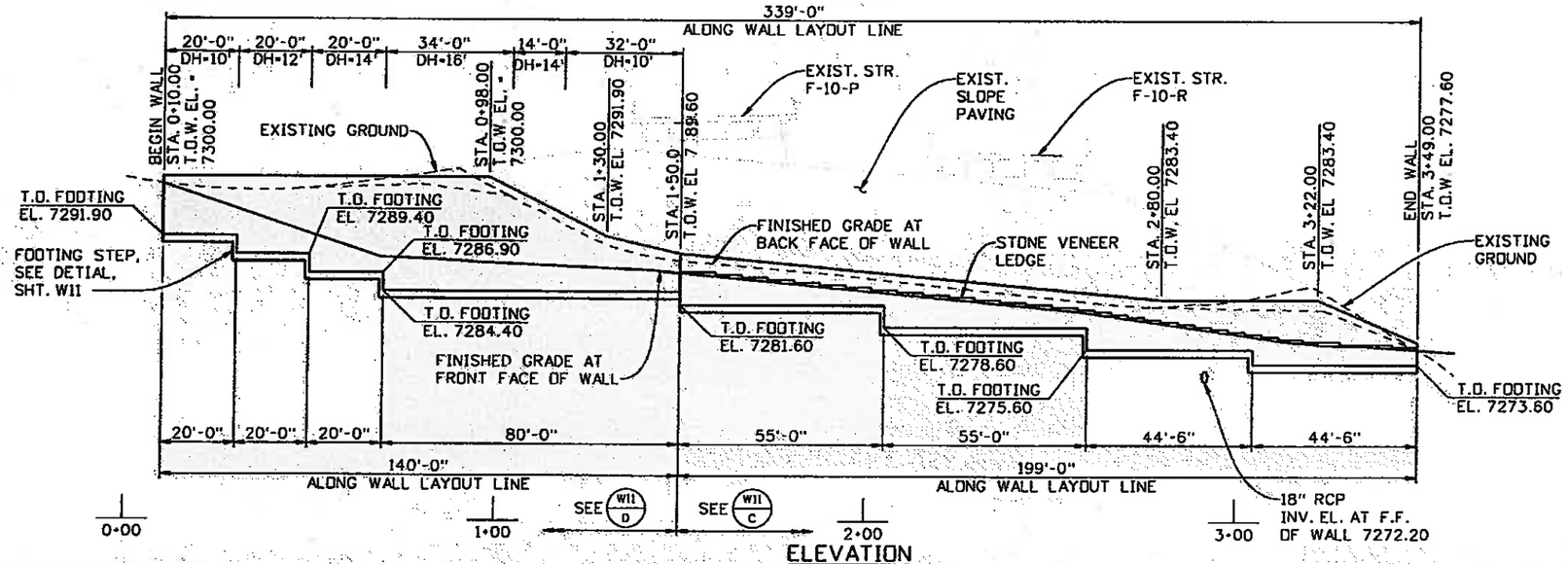

TOP OF SIDEWALK ELEVATIONS AT WALL LAYOUT LINE	
STATION	ELEVATION
1+50.00	7286.94
2+56.06	7281.87
3+13.37	7277.72
3+25.55	7277.24
3+33.23	7277.15
3+49.00	7276.61

THESE POINTS SHALL BE USED FOR STONE VENEER LEDGE STEP LAYOUT.

NOTES:

1. FOR FOOTING STEP DETAILS SEE SHEET W11.
2. REMOVE EXISTING SLOPE PAVING AS REQUIRED TO CONSTRUCT WALL, SEE SHT. W11.
3. EXISTING SLOPE PAVING SHALL BE STABILIZED DURING CONSTRUCTION TO PREVENT MOVING OR SLIDING.
4. EXISTING SOIL CONDITIONS BENEATH THE BRIDGE STRUCTURE ARE UNKNOWN. GEOTECHNICAL PARAMETERS WERE ESTABLISHED FROM THE NEAREST BORINGS ADJACENT TO THE BRIDGE.
5. THE EXISTING 4" LOW PRESSURE GAS LINE IS TO REMAIN, AND SHALL BE AVOIDED DURING CONSTRUCTION.
6. SHORING SHOWN IS FOR ILLUSTRATION PURPOSE ONLY. ACTUAL SHORING LIMITS AND DESIGN SHALL BE DETERMINED BY THE CONTRACTOR. SHORING SHALL BE INSTALLED AT LEAST 8 FEET FROM THE EXISTING BRIDGE ABUTMENT OR WINGWALL.

EAGLE COUNTY

FELSBURG HOLT & ULLEVIG

Print Date: 11/2/2009	Sheet Revisions		
Drawing File Name: 06193WALLGLA04.dgn	Date:	Comments	Init.
Horiz. Scale: 1:40 Vert. Scale: As Noted			
Unit Information Unit Leader Initials			

Colorado Department of Transportation
714 Grand Avenue, P.O. Box 298
Eagle, CO 81631
Phone: 970-328-6385 FAX: 970-328-2368
Region 3 MLM

As Constructed
No Revisions: 6-6-2011
Revised:
Void:

EDWARDS INTERCHANGE UPGRADE
EAST UPPER RETAINING WALL
GENERAL LAYOUT

Designer:	P. STEIN	Structure Numbers	WALL-F-10-0
Detailer:	R. DILLON		
Sheet Subset:	WALL	Subset Sheets:	W7 of 25

Project No./Code
ES3 0702-297
17303
Sheet Number 87

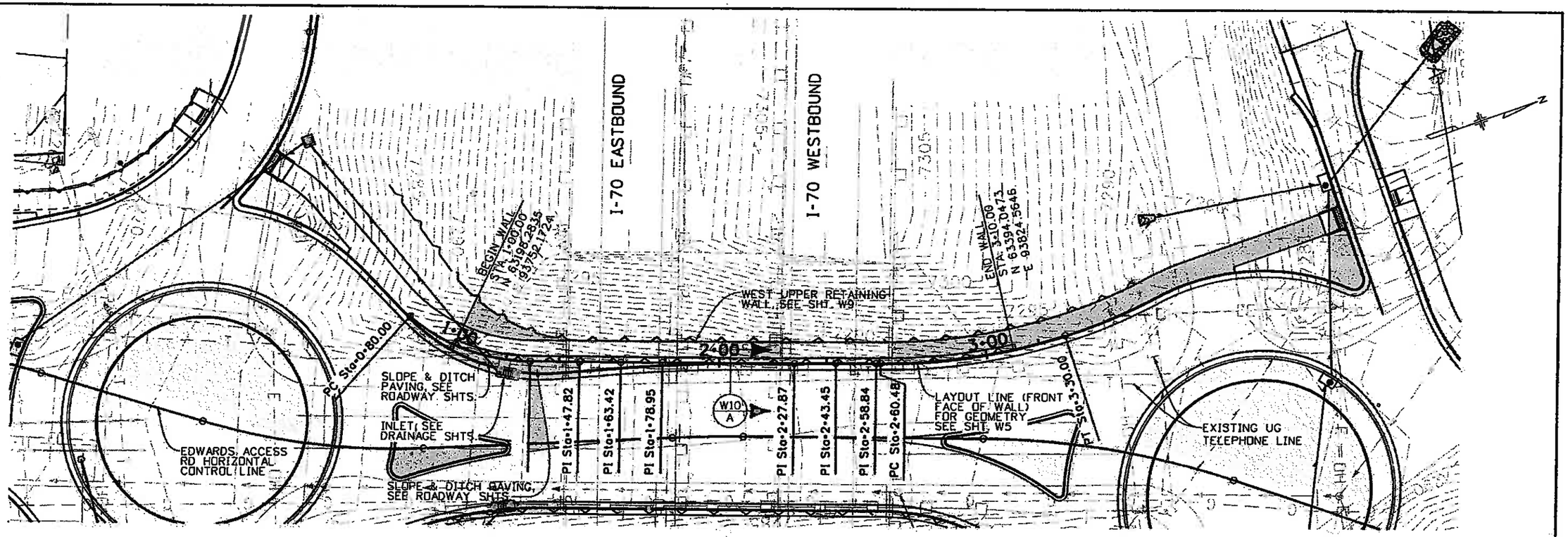

PLAN

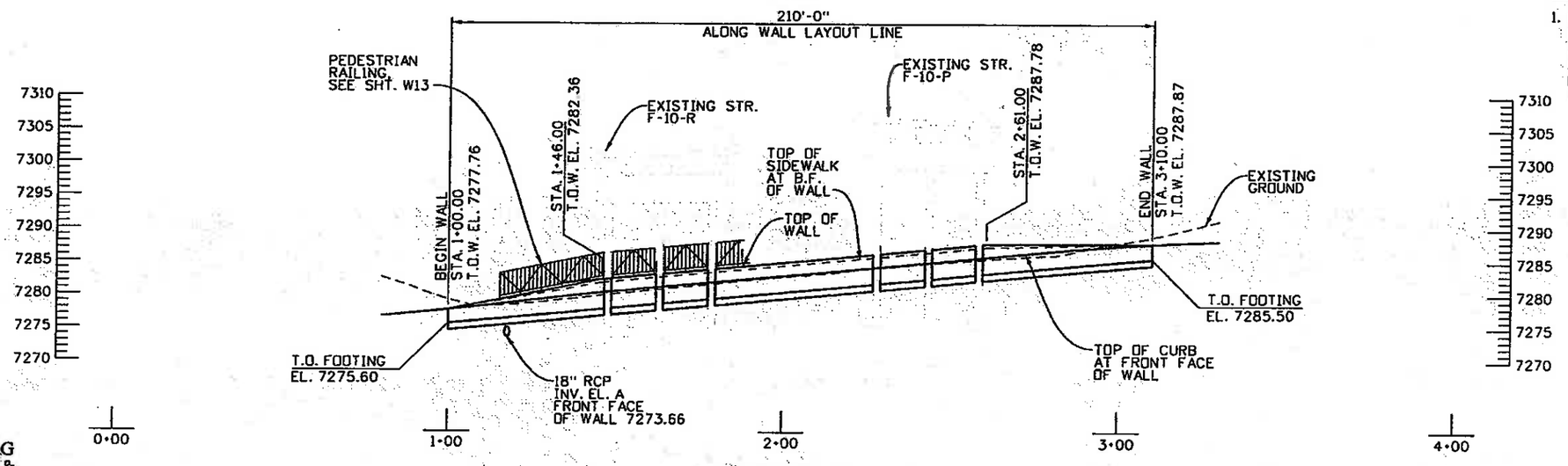

ELEVATION

NOTES:

1. EXISTING SOIL CONDITIONS BENEATH THE BRIDGE STRUCTURE ARE UNKOWN. GEOTECHNICAL PARAMATERS WERE ESTABLISHED FROM THE NEAREST BORINGS ADJACENT TO THE BRIDGE.

EAGLE COUNTY

FELSBURG HOLT & ULLEVIG

Print Date: 10/27/2009		Sheet Revisions			
Drawing File Name: 06193WALLGLA01.dgn		Date:	Comments	Init.	
Horiz. Scale: 1:40	Vert. Scale: As Noted				
Unit Information	Unit Leader Initials				

Colorado Department of Transportation
714 Grand Avenue, P.O. Box 298
Eagle, CO 81631
Phone: 970-328-6385 FAX: 970-328-2368
Region 3 MLM

As Constructed
No Revisions: 6-6-2011
Revised:
Void:

EDWARDS INTERCHANGE UPGRADE
WEST LOWER RETAINING WALL
GENERAL LAYOUT

Designer:	P. STEIN	Structure Numbers	
Detailer:	R. DILLON		
Sheet Subset:	WALL	Subset Sheets:	W8 of 25

Project No./Code
ES3 0702-297
17303
Sheet Number 88

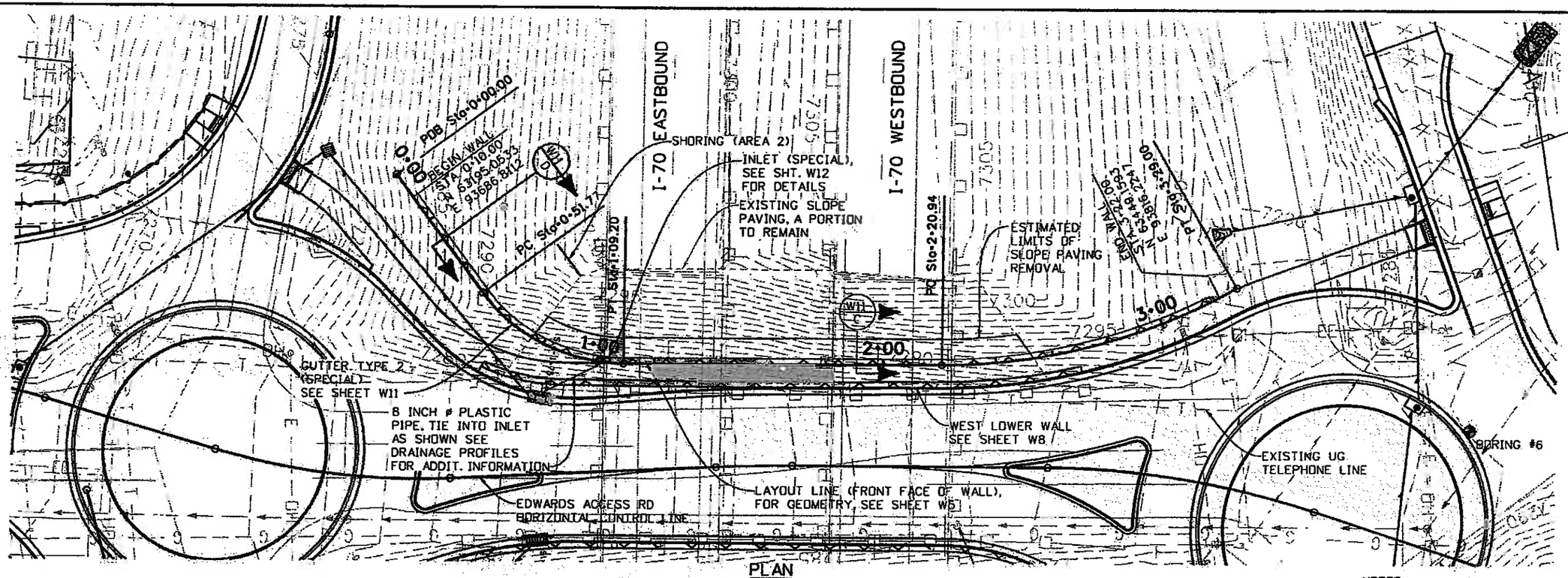

PLAN

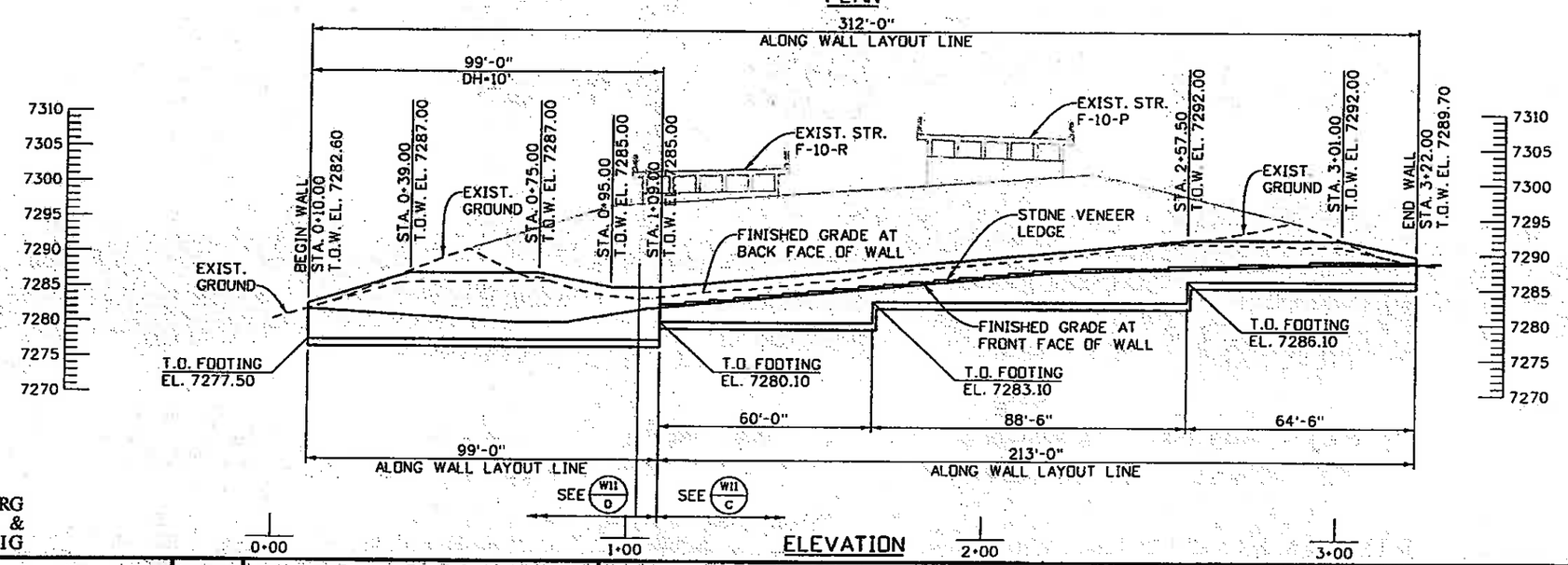

ELEVATION

TOP OF SIDEWALK ELEVATIONS AT WALL LAYOUT LINE	
STATION	ELEVATION
1+09.00	7282.16
2+20.57	7287.42
2+67.77	7288.02
3+22.00	7288.53

THESE POINTS SHALL BE USED FOR STONE VENEER LEDGE STEP LAYOUT.

NOTES:

1. FOR FOOTING STEP DETAILS SEE SHEET W11.
2. REMOVE EXISTING SLOPE PAVING AS REQUIRED TO CONSTRUCT WALL, SEE SHT. W11.
3. EXISTING SLOPE PAVING SHALL BE STABILIZED DURING CONSTRUCTION TO PREVENT MOVING OR SLIDING.
4. EXISTING SOIL CONDITIONS BENEATH THE BRIDGE STRUCTURE ARE UNKNOWN. GEOTECHNICAL PARAMETERS WERE ESTABLISHED FROM THE NEAREST BORINGS ADJACENT TO THE BRIDGE.
5. INLET (SPECIAL) SHALL BE NEENAH R-4003 TYPE A OR APPROVED EQUAL.
6. SHORING SHOWN IS FOR ILLUSTRATION PURPOSES ONLY. ACTUAL SHORING LIMITS AND DESIGN SHALL BE DETERMINED BY THE CONTRACTOR. SHORING SHALL BE INSTALLED AT LEAST 8 FEET FROM THE EXISTING BRIDGE ABUTMENT OR WINGWALL.

EAGLE COUNTY

FELSBURG HOLT & ULLEVIG

Design #	INITIAL	DATE	Detail	INITIAL	DATE	Quc	DATE
Designed By	PRS	08-08	Detailed By	RAD	08-08	Quantities By	
Checked By			Checked By	PRS	08-08	Checked By	

Revision Dates (Preliminary Stage Only)

Print Date: 11/2/2009
Drawing File Name: 06193WALLGLA02.dgn
Horiz. Scale: 1:40 Vert. Scale: As Noted
Unit Information Unit Leader Initials

R-X

Sheet Revisions		
Date:	Comments	Init.

Colorado Department of Transportation
714 Grand Avenue, P.O. Box 298
Eagle, CO 81631
Phone: 970-328-6385 FAX: 970-328-2368
Region 3 MLM

As Constructed
No Revisions: 6-6-2011
Revised:
Void:

EDWARDS INTERCHANGE UPGRADE
WEST UPPER RETAINING WALL
GENERAL LAYOUT

Designer:	P. STEIN	Structure Numbers	WALL-F-10-N
Detailer:	R. DILLON		
Sheet Subset:	WALL	Subset Sheets:	W9 of 25

Project No./Code
ES3 0702-297
17303
Sheet Number 89

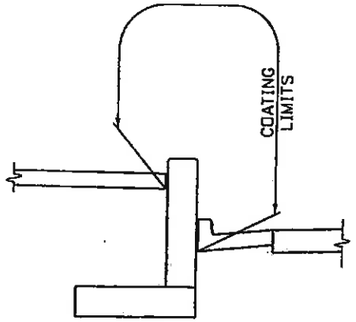

STRUCTURAL CONCRETE COATING LIMITS

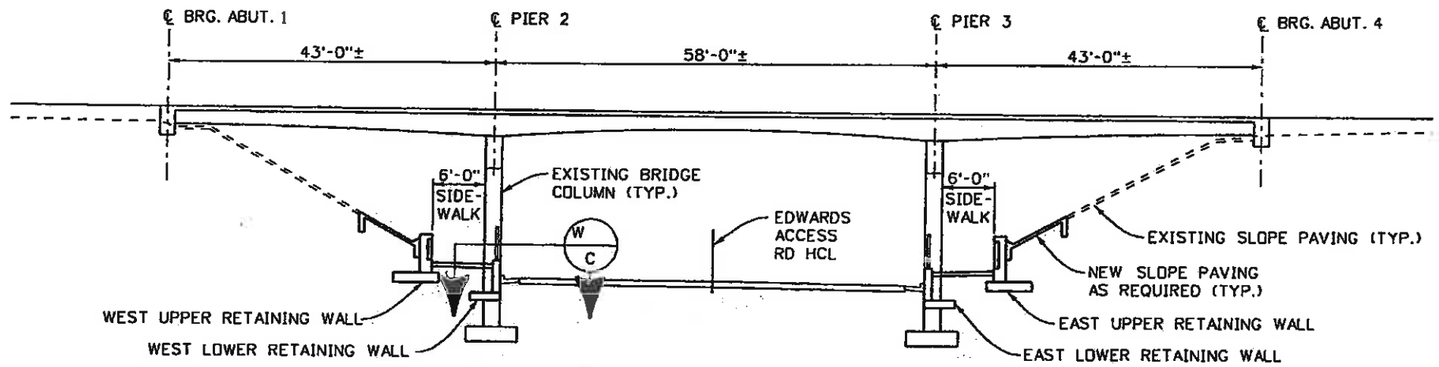

TYPICAL SECTION AT EXISTING STRUCTURE

(LOKING NORTH, EXISTING EASTBOUND STR. F-10-R SHOWN, SECTION AT WESTBOUND STR. F-10-P SIMILAR)

NOTES:

1. EXISTING SLOPE PAVING SHALL BE STABILIZED DURING CONSTRUCTION TO PREVENT ANY MOVEMENT OR SLIDING.

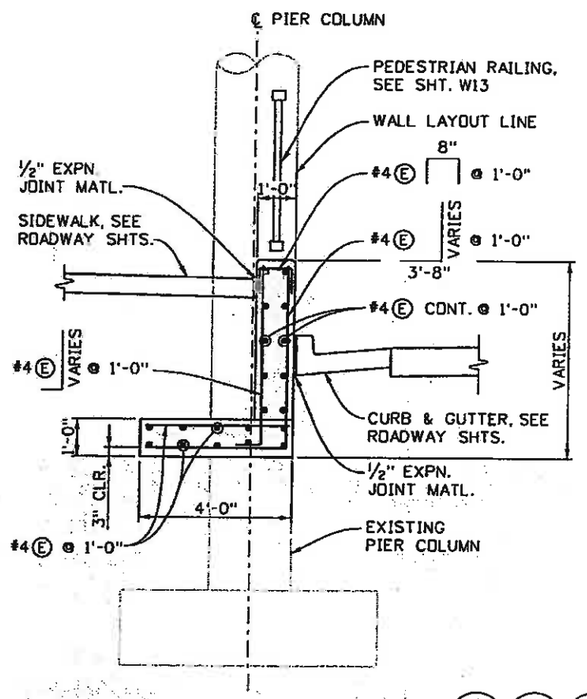

LOWER RETAINING WALL SECTION A W6 A W8 A

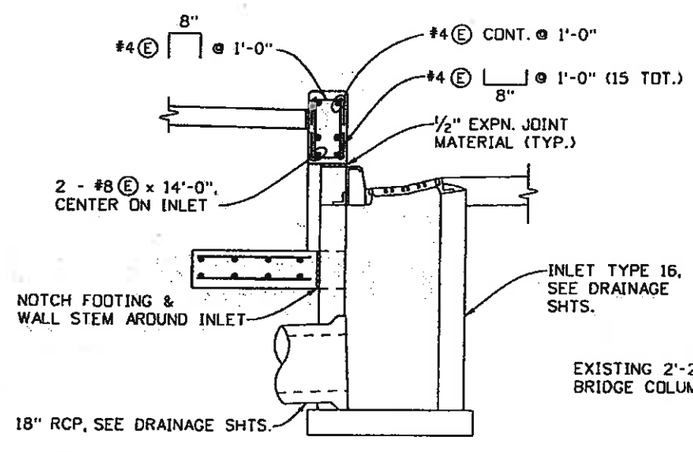

SECTION W6 B

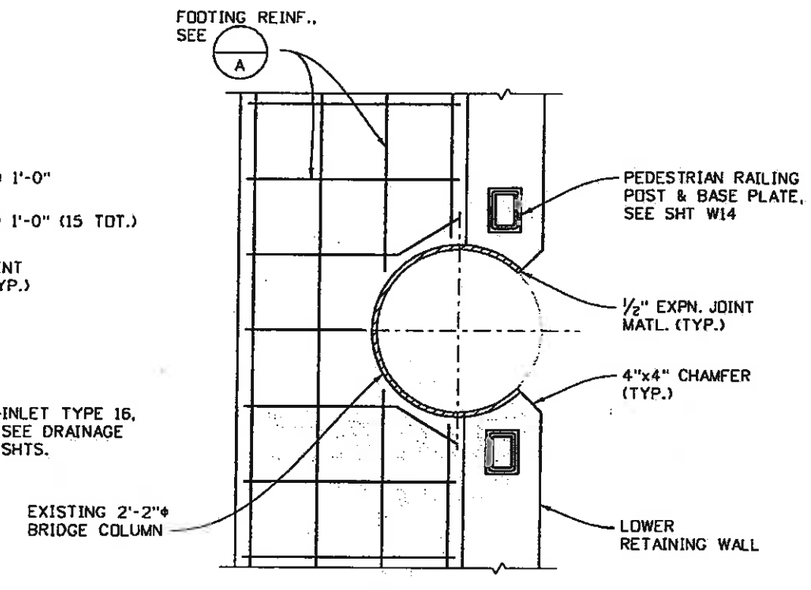

EXISTING COLUMN

SECTION W C

EAGLE COUNTY

FELSBURG HOLT & ULLEVIG

Print Date: 10/27/2009		Sheet Revisions			
Drawing File Name: 06193WALLDET01.dgn		Date:	Comments	Init.	
Horiz. Scale: 1:1	Vert. Scale: As Noted				
Unit Information	Unit Leader Initials				

R-X

Colorado Department of Transportation

DOT

714 Grand Avenue, P.O. Box 298
Eagle, CO 81631
Phone: 970-328-6385 FAX: 970-328-2368

Region 3 MLM

As Constructed

No Revisions: 6-6-2011

Revised:

Void:

EDWARDS INTERCHANGE UPGRADE
LOWER RETAINING WALL
SECTIONS & DETAILS

Designer:	P. STEIN	Structure Numbers	
Detailer:	R. DILLON		
Sheet Subset:	WALL	Subset Sheets:	W10 of 25

Project No./Code

ES3 0702-297

17303

Sheet Number 90

Design	INITIAL	DATE	Detail	INITIAL	DATE	Quan	DATE
Designed By	PRS	08-08	Detailed By	RAD	08-08	Quantities By	
Checked By			Checked By	PRS	08-08	Checked By	

Revision Dates (Preliminary Stage Only)

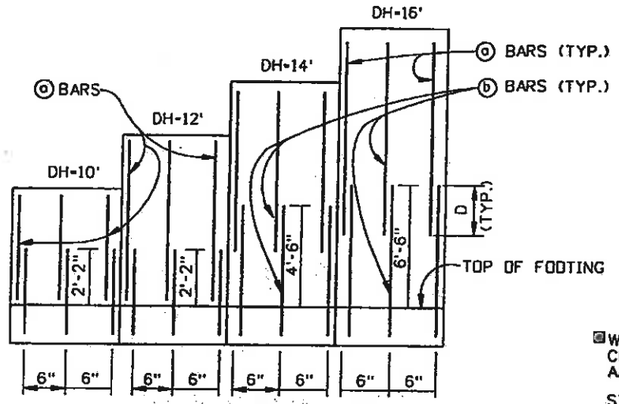

REINFORCING ELEVATION

DESIGN DATA - REINFORCING STEEL - DIMENSIONS				
DH	10'	12'	14'	16'
W	6'-6"	7'-6"	8'-6"	10'-0"
C	2'-0"	2'-0"	3'-0"	3'-0"
B	4'-6"	5'-6"	5'-6"	7'-0"
TW	1'-2"	1'-4"	1'-6"	1'-8"
ⓐBARS	#5 @ 6"	#5 @ 6"	#5 @ 6"	#5 @ 6"
ⓑBARS	#5 @ 6"	#5 @ 6"	#6 @ 6"	#6 @ 6"
ⓒBARS	#5 @ 1'-0"	#5 @ 6"	#5 @ 6"	#6 @ 6"
ⓓBARS	#4 @ 1'-0"	#5 @ 1'-0"	#5 @ 6"	#5 @ 6"
D	2'-0"	2'-0"	2'-3"	2'-3"
CONCRETE (CY/LIN. FT)	0.85	1.02	1.21	1.43
REINF. STEEL (LB/FT)	73.9	93.8	125.3	151.8

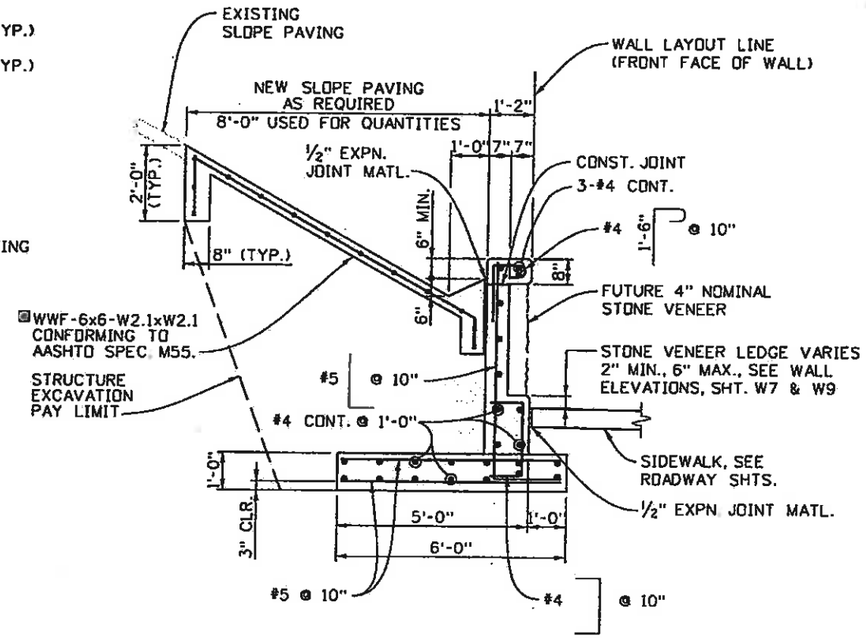

■ 2.5 LBS. OF AN APPROVED POLYPROPYLENE FIBER, PER CUBIC YARD OF CONCRETE, MAY BE SUBSTITUTED FOR THE WWF IN THIS SLOPE PAVING. IF THIS SUBSTITUTION IS MADE, A CONTINUOUS #5 REINFORCING BAR SHALL BE ADDED NEAR THE TOP AND BOTTOM OF THE CUTOFF WALL. THE FIBER SHALL BE ADDED TO THE CONCRETE MIX IN SUCH A FASHION THAT THE FIBERS ARE UNIFORMLY DISPERSED IN THE CONCRETE WITHOUT VISIBLE BALLS OR CLUMPS IN EITHER THE FINISHED SLOPE PAVING OR IN THE PLASTIC CONCRETE DELIVERED FROM THE CONCRETE TRUCK.

UPPER RETAINING WALL SECTION (W7 C) (W9 C)

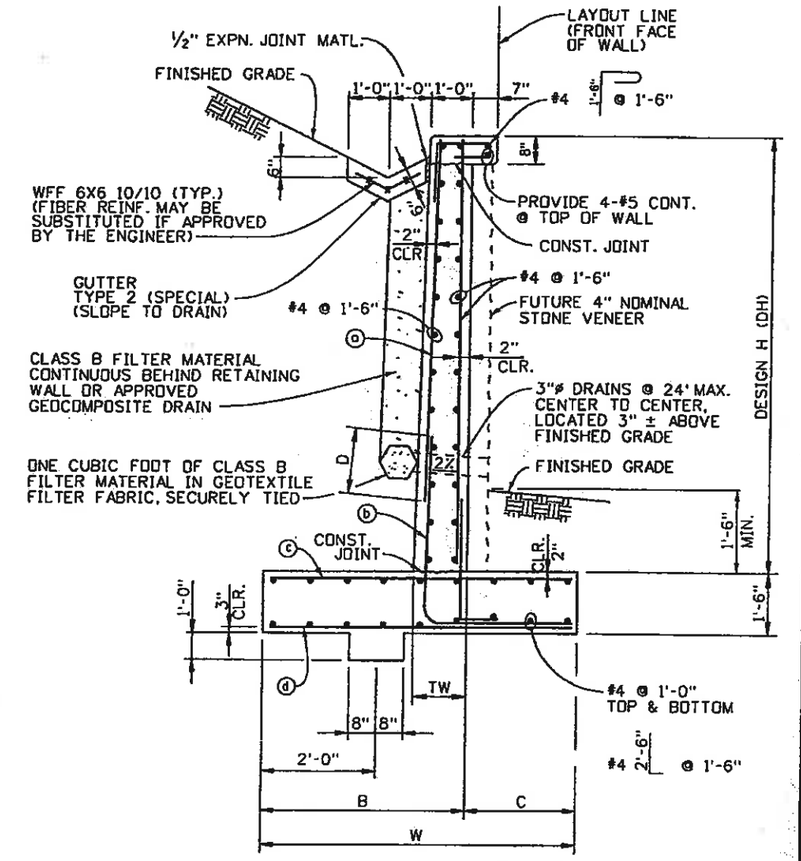

SECTION (W7 D) (W9 D)
EAST & WEST UPPER RETAINING WALLS

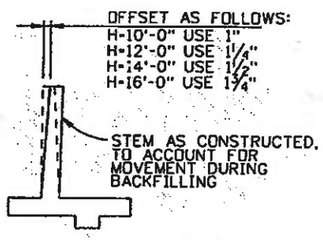

APPROXIMATE WALL OFFSETS

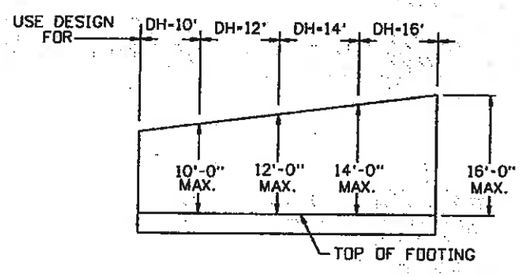

RETAINING WALL ELEVATION

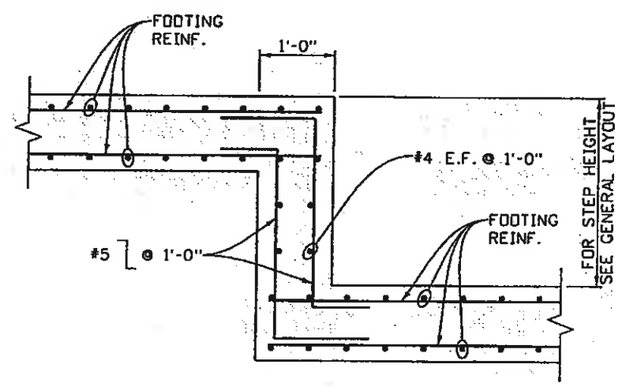

FOOTING STEP

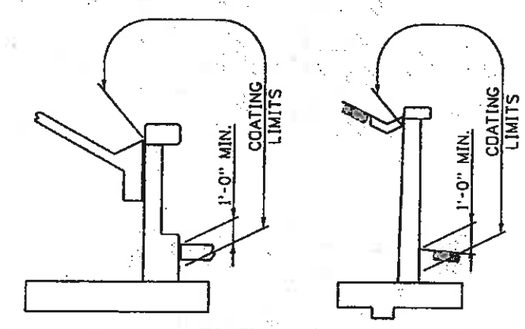

STRUCTURAL CONCRETE COATING LIMITS

EAGLE COUNTY
FELSBURG HOLT & ULLEVIG

Revision Dates (Preliminary Stage Only)						
Designed By	PRS	08-08	Detailed By	RAD	08-08	Quantities By
Checked By			Checked By	PRS	08-08	Checked By

Print Date: 10/27/2009		
Drawing File Name: 06193WALLDET03.dgn		
Horiz. Scale: 1:1	Vert. Scale: As Noted	R-X
Unit Information	Unit Leader Initials	

Sheet Revisions		
Date:	Comments	Init.

Colorado Department of Transportation
DOT
714 Grand Avenue, P.O. Box 298
Eagle, CO 81631
Phone: 970-328-6385 FAX: 970-328-2368
Region 3 MLM

As Constructed	
No Revisions: 6-6-2011	
Revised:	
Void:	

EDWARDS INTERCHANGE UPGRADE
UPPER RETAINING WALL SECTIONS & DETAILS

Designer:	P. STEIN	Structure Numbers	WALL-F-10-N
Detailer:	R. DILLON		WALL-F-10-O
Sheet Subset:	WALL	Subset Sheets:	W11 of 25

Project No./Code
ES3 0702-297
17303
Sheet Number 91

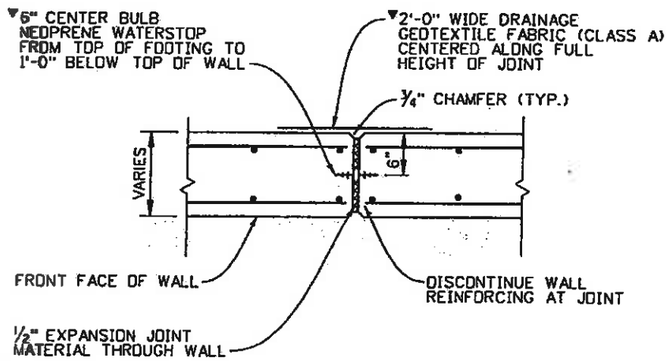

EXPANSION JOINT

▼ITEMS SHALL NOT BE PAID FOR SEPARATELY, BUT SHALL BE INCLUDED IN THE COST OF ITEM 601, CONCRETE CLASS D (WALL)

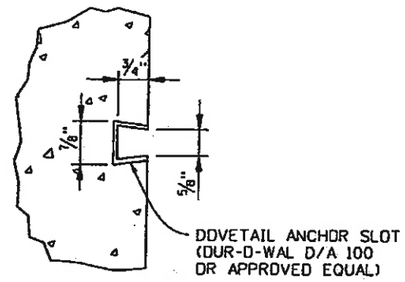

NOTES:

1. PROVIDE EMBEDDED ANCHOR SLOTS AT 1'-6" O.C. (MEASURED HORIZONTALLY) ALONG AREAS RECEIVING FUTURE STONE VENEER.
2. ANCHORS SHALL BE PLACED AT MAX. 1'-6" O.C. IN SLOTS. ANCHOR TYPE TO BE USED SHALL BE SUBMITTED TO ENGINEER FOR APPROVAL.
3. COST OF ANCHOR SLOTS WILL NOT BE PAID FOR SEPARATELY, BUT SHALL BE INCLUDED IN ITEM 601, CONCRETE CLASS D (WALL).

DOVETAIL ANCHOR DETAIL

FOR FUTURE STONE VENEER ANCHORS

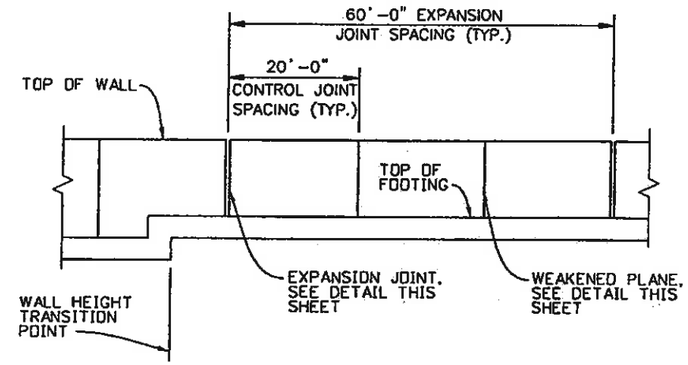

TYPICAL RETAINING WALL ELEVATION

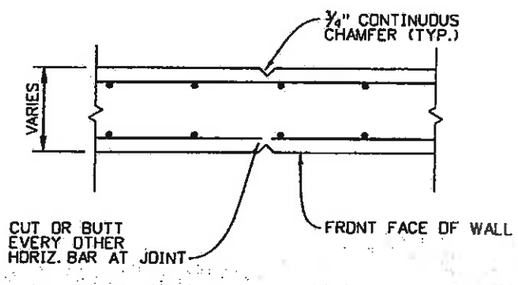

CONTROL JOINT

(WEAKENED PLANE)

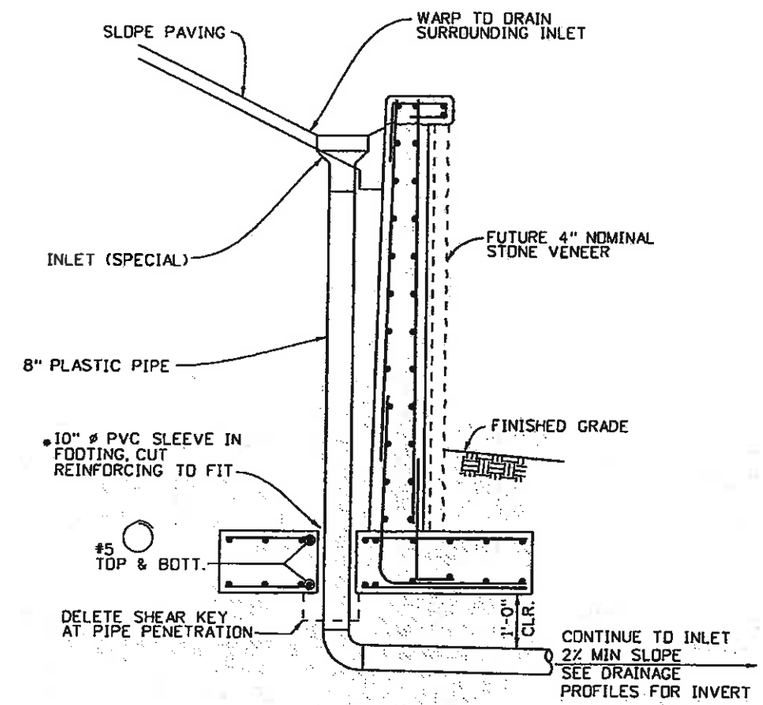

SECTION AT INLET (SPECIAL)

• GAP BETW. SLEEVE AND 8" PIPE SHALL BE FILLED WITH EXPANDING FOAM SEALANT PRIOR TO BACKFILLING. 10" ø PVC SLEEVE AND FOAM SEALANT SHALL NOT BE PAID FOR SEPARETLY, BUT SHALL BE INCLUDED IN THE WORK.

EAGLE COUNTY

FELSBURG HOLT & ULLEVIG

Design			Detail			Quant		
Designed By	INITIAL	DATE	Detailed By	INITIAL	DATE	Quantities By		
Checked By	PRS	08-08	Checked By	RAD	08-08	Checked By		
				PRS	08-08			

Revision Dates (Preliminary Stage Only)

Print Date: 10/27/2009		Sheet Revisions			Colorado Department of Transportation	As Constructed
Drawing File Name: 06193WALLDET01.dgn		Date:	Comments	Init.	DOT	No Revisions: 6-6-2011
Horiz. Scale: 1:1	Vert. Scale: As Noted				714 Grand Avenue, P.O. Box 298 Eagle, CO 81631 Phone: 970-328-6385 FAX: 970-328-2368	Revised:
Unit Information	Unit Leader Initials				Region 3 MLM	Void:

EDWARDS INTERCHANGE UPGRADE
UPPER & LOWER RETAINING WALL
MISCELLANEOUS DETAILS

Designer:	P. STEIN	Structure Numbers	WALL-F-10-N
Detailer:	R. DILLON		WALL-F-10-O
Sheet Subset:	WALL	Subset Sheets:	W12 of 25

Project No./Code: ES3 0702-297

17303

Sheet Number 92

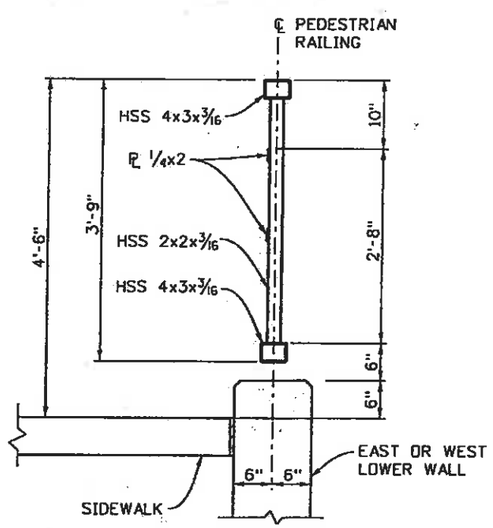

TYPICAL PEDESTRIAN RAILING SECTION

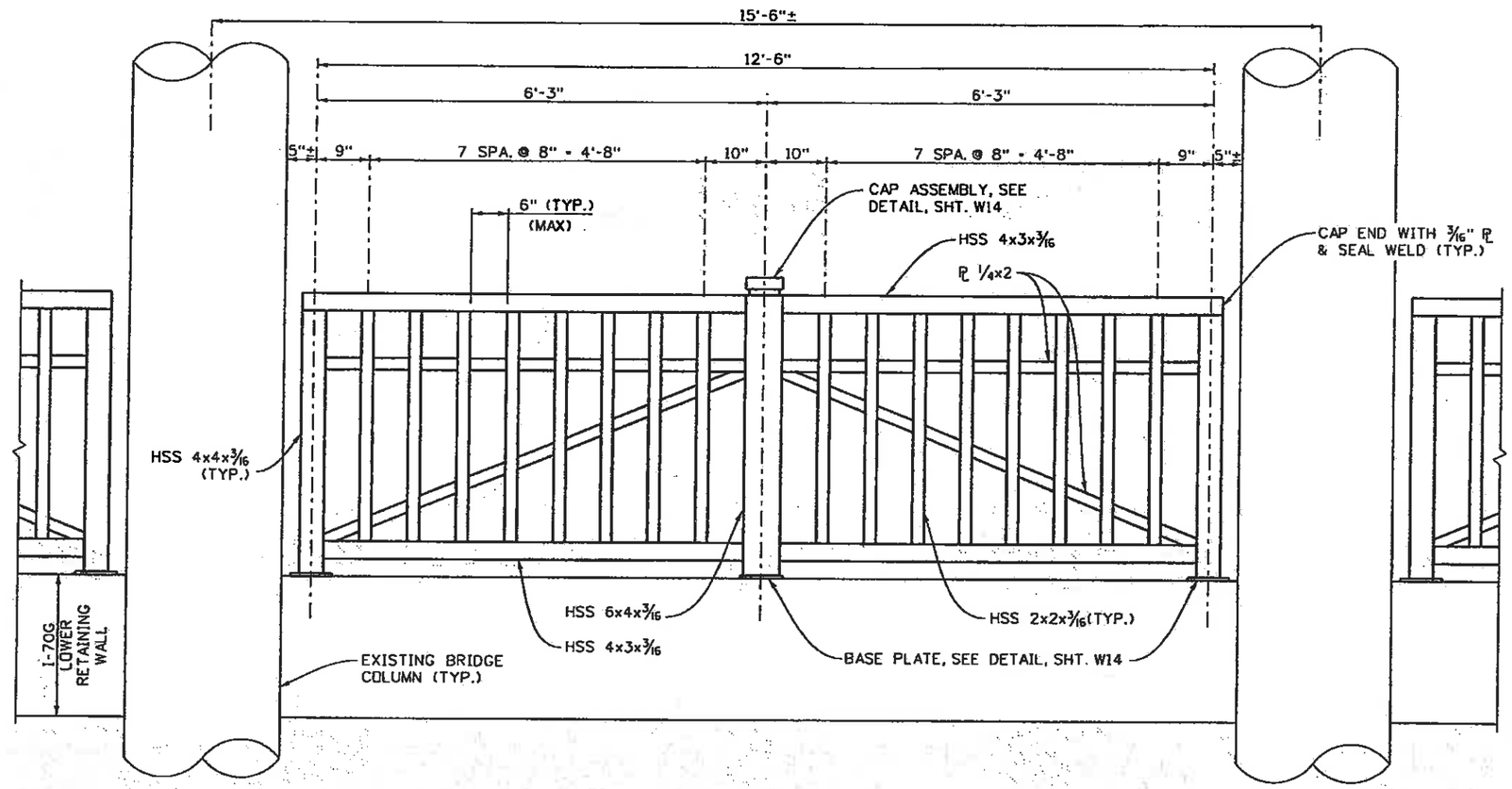

TYPICAL INTERIOR PANEL ELEVATION

Revision Dates	DATE
(Preliminary Stage Only)	

Design	INITIAL	DATE
Designed By	PRS	08-08
Checked By		

Date(s)	INITIAL	DATE
Detailed By	RAD	08-08
Checked By	PRS	08-08

Quan.	
Quantities By	
Checked By	

EAGLE COUNTY

FELSBURG HOLT & ULLEVIG

Print Date: 10/27/2009		Sheet Revisions			
Drawing File Name: 06193WALLPEDRAIL01.DGN		Date:	Comments	Init.	
Horiz. Scale: 1:1 Vert. Scale: As Noted	R-X				
Unit Information Unit Leader Initials					

Colorado Department of Transportation

DOT

714 Grand Avenue, P.O. Box 298
Eagle, CO 81631
Phone: 970-328-6385 FAX: 970-328-2368

Region 3 MLM

As Constructed	EDWARDS INTERCHANGE UPGRADE LOWER WALL PEDESTRIAN RAILING DETAILS (1 OF 2)		Project No./Code
No Revisions: 6-6-2011	Designer: P. STEIN	Structure Numbers	ES3 0702-297
Revised:	Detailer: R. DILLON		17303
Void:	Sheet Subset: WALL	Subset Sheets: W13 of 25	Sheet Number 93

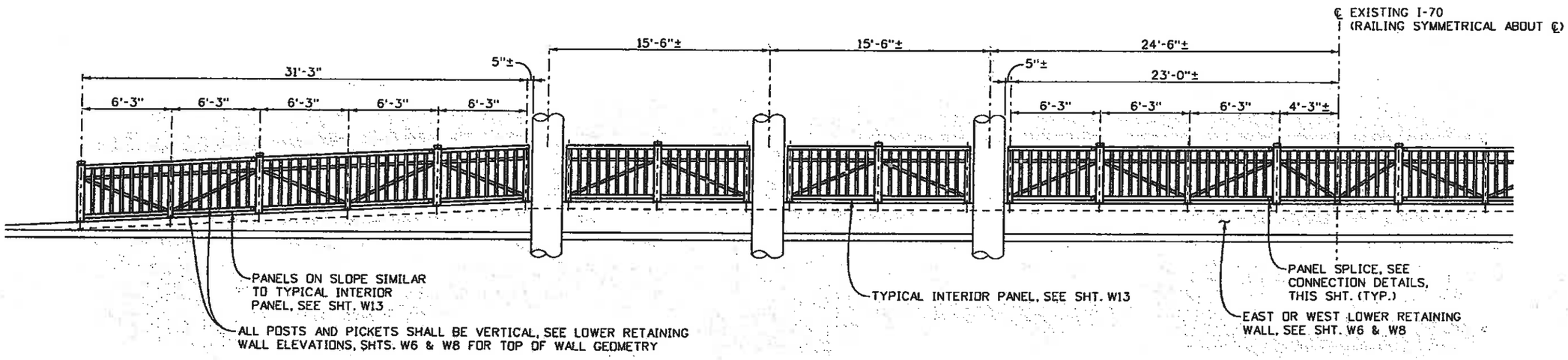

PARTIAL OVERALL ELEVATION
(LOOKING AT ROADWAY SIDE OF RAILING)

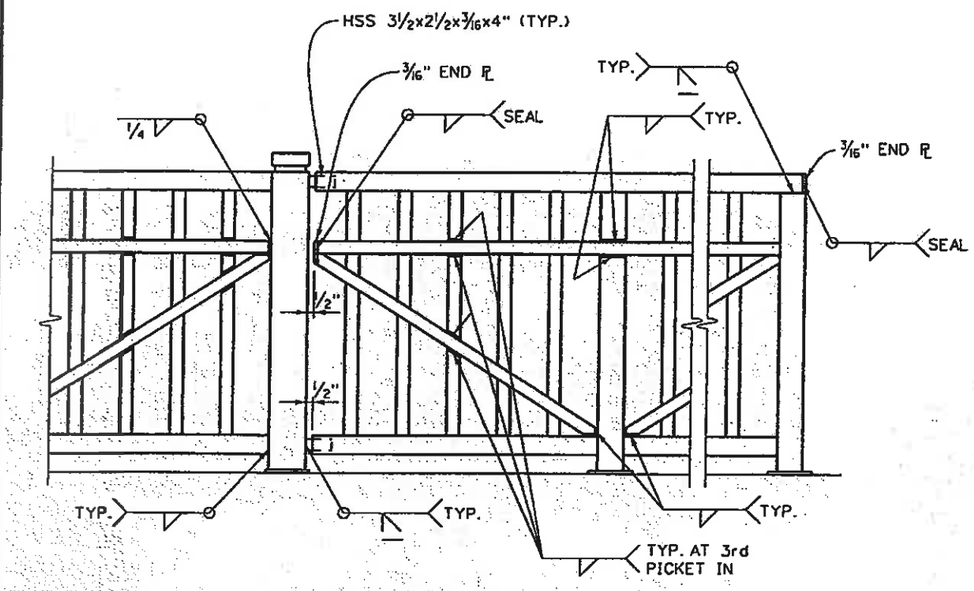

CONNECTION DETAILS
(LOOKING AT SIDEWALK SIDE OF RAILING)

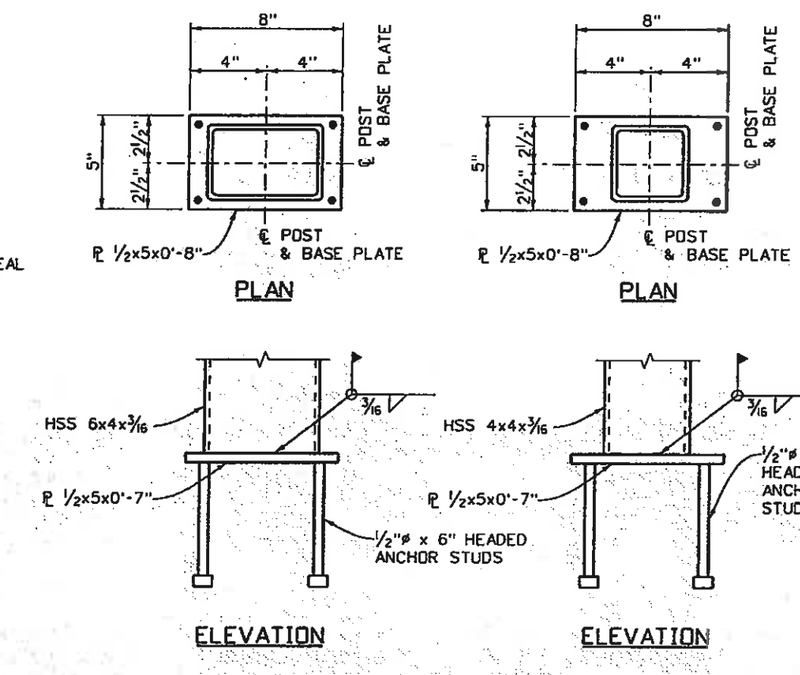

BASE PLATE DETAILS
(GALVANIZE AFTER FABRICATION)

NOTES:

1. RAILING PANELS SHALL BE FABRICATED TO FIT THE GRADE OF THE TOP OF THE RETAINING WALLS. VERTICAL MEMBERS OF THE PANELS SHALL BE PLUMB AFTER ERECTION.
2. RAILING PANELS SHALL BE PAINTED AFTER FABRICATION IN ACCORDANCE WITH SECTION 509 OF THE CDOT STANDARD SPECIFICATIONS. THE COLOR SHALL BE EQUIVALENT TO FEDERAL STANDARD 595B, COLOR NO. 14241.
3. PRIOR TO FABRICATION OF THE RAILING, THREE SETS OF SHOP DRAWINGS WHICH COMPLY WITH THE REQUIREMENTS OF SECTION 105, SHALL BE SUBMITTED TO THE ENGINEER FOR APPROVAL.

STRUCTURAL STEEL:
STRUCTURAL TUBING: ASTM A-500 GRADE B
BAR & PLATE: ASTM A-709 GRADE 36

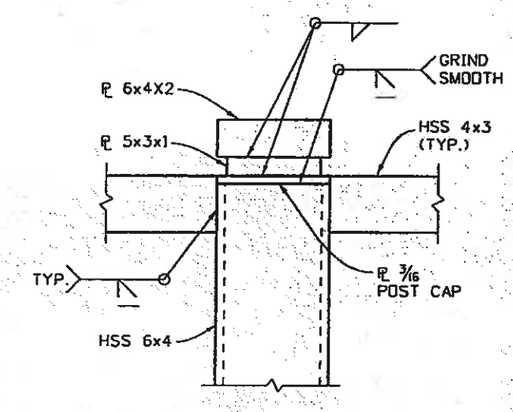

CAP ASSEMBLY DETAIL

EAGLE COUNTY
FELSBURG HOLT & ULLEVIG

Print Date: 10/27/2009		Sheet Revisions			
Drawing File Name: 06193WALLPEDRAIL01.DGN		Date:	Comments	Init	
Horiz. Scale: 1:1	Vert. Scale: As Noted				
Unit Information	Unit Leader Initials				

R-X

Colorado Department of Transportation
714 Grand Avenue, P.O. Box 298
Eagle, CO 81631
Phone: 970-328-6385 FAX: 970-328-2368
Region 3 MLM

As Constructed
No Revisions: 6-6-2011
Revised:
Void:

EDWARDS INTERCHANGE UPGRADE
LOWER WALL PEDESTRIAN
RAILING DETAILS (2 OF 2)

Designer:	P. STEIN	Structure Numbers	
Detailer:	R. DILLON		
Sheet Subset:	WALL	Subset Sheets:	W14 of 25

Project No./Code
ES3 0702-297
17303
Sheet Number 94

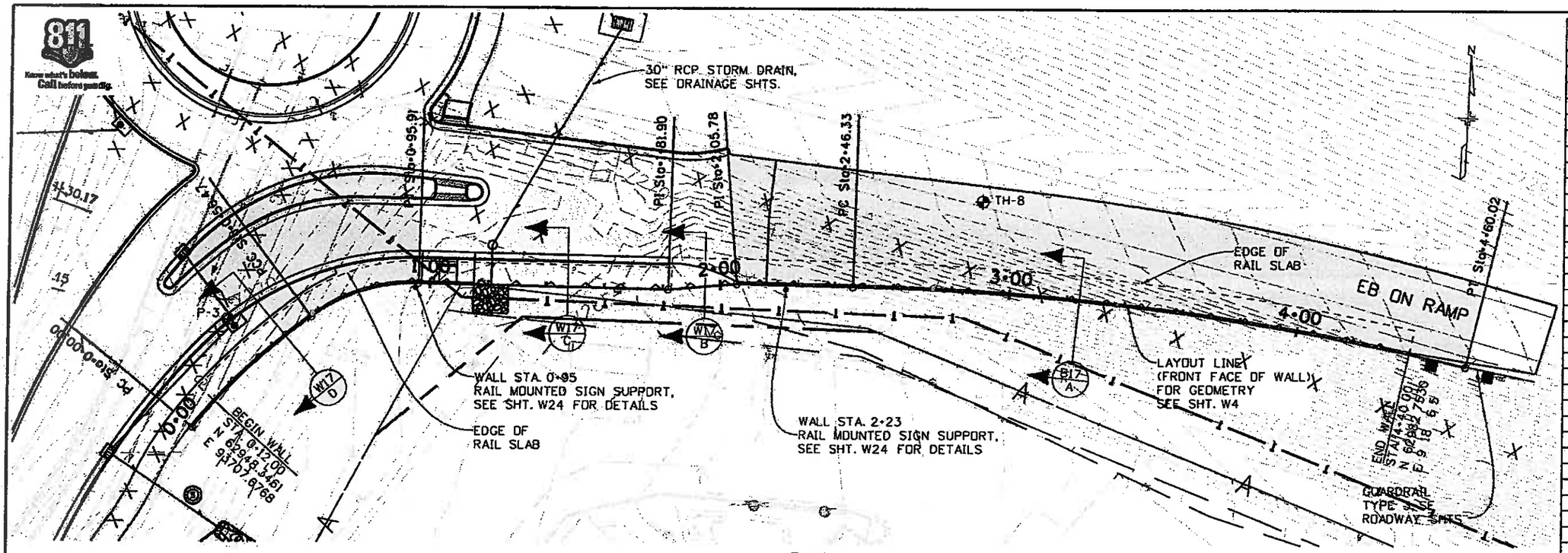

PLAN

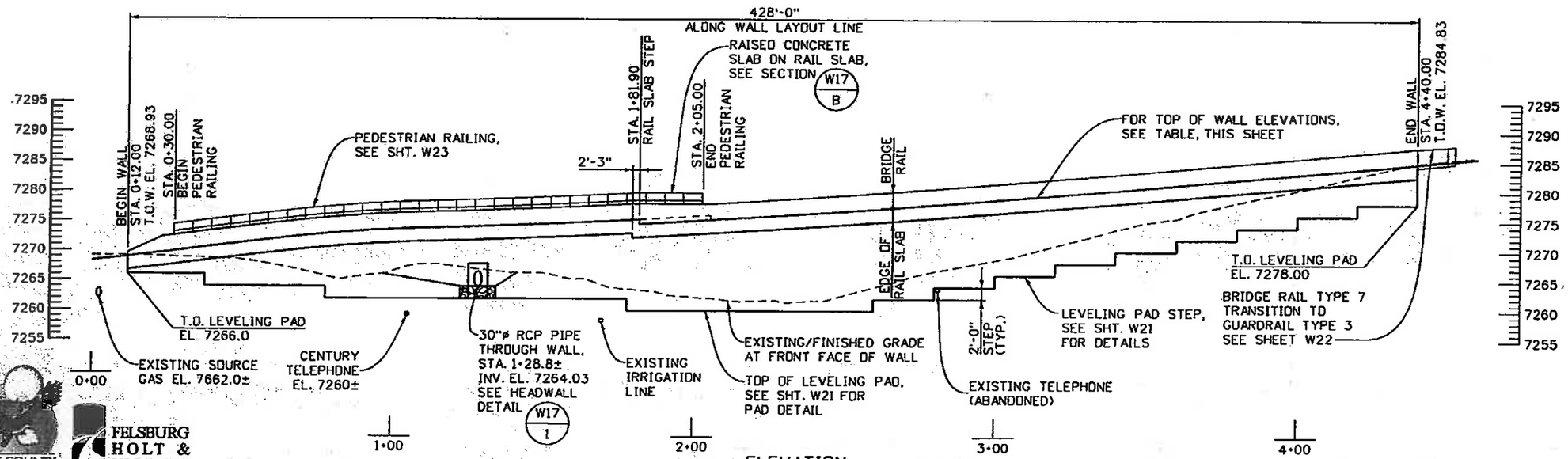

ELEVATION

EB ON RAMP TOP OF WALL ELEVATIONS	
Station	Elevation
0+12.00	7268.93
0+20.00	7269.40
0+30.00	7270.02
0+40.00	7270.67
0+50.00	7271.30
0+60.00	7271.89
0+70.00	7272.46
0+80.00	7272.95
0+90.00	7273.34
1+00.00	7273.63
1+10.00	7273.82
1+20.00	7273.98
1+30.00	7274.15
1+40.00	7274.34
1+50.00	7274.55
1+60.00	7274.78
1+70.00	7275.03
1+80.00	7275.28
1+81.90	7275.33
1+81.90	7274.56
1+90.00	7274.80
2+00.00	7275.10
2+10.00	7275.41
2+20.00	7275.72
2+30.00	7276.04
2+40.00	7276.38
2+50.00	7276.74
2+60.00	7277.10
2+70.00	7277.48
2+80.00	7277.87
2+90.00	7278.28
3+00.00	7278.68
3+10.00	7279.09
3+20.00	7279.51
3+30.00	7279.93
3+40.00	7280.35
3+50.00	7280.79
3+60.00	7281.24
3+70.00	7281.69
3+80.00	7282.14
3+90.00	7282.59
4+00.00	7283.04
4+10.00	7283.49
4+20.00	7283.93
4+30.00	7284.38
4+40.00	7284.83

Know what's below. Call before you dig.

Revision Dates (Preliminary Stage Only)

Quantities	
Quantities By	INITIAL
Checked By	

Detail			
	INITIAL	DATE	
Detailed By	RAD	08-08	Quantities By
Checked By	PRS	08-08	Checked By

Design			
	INITIAL	DATE	
Designed By	PRS	08-08	Detailed By
Checked By			Checked By

EAGLE COUNTY

FELSBURG HOLT & ULLEVIG

Print Date: 10/27/2009
Drawing File Name: 06193WALLGLA05.dgn
Horiz. Scale: 1:40 Vert. Scale: As Noted
Unit Information Unit Leader Initials

R-X

Sheet Revisions		
Date:	Comments	Init.

Colorado Department of Transportation
CDOT
714 Grand Avenue, P.O. Box 298
Eagle, CO 81631
Phone: 970-328-6385 FAX: 970-328-2368
Region 3 MLM

As Constructed
No Revisions: 6-10-2011
Revised:
Void:

EDWARDS INTERCHANGE UPGRADE
EB ON RAMP RETAINING WALL
GENERAL LAYOUT

Designer:	P. STEIN	Structure Numbers	WALL-F-10-Q
Detailer:	R. DILLON		
Sheet Subset:	WALL	Subset Sheets:	W15 of 25

Project No./Code
ES3 0702-297
17303
Sheet Number 95

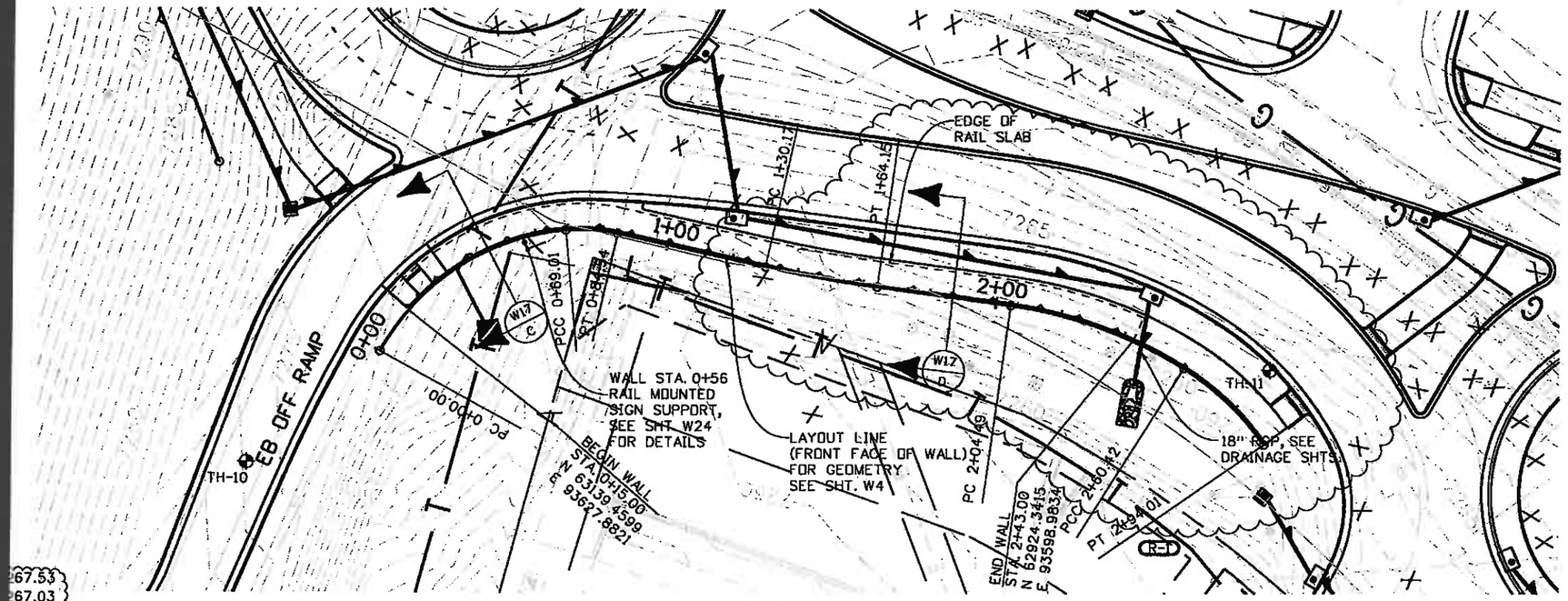

PLAN

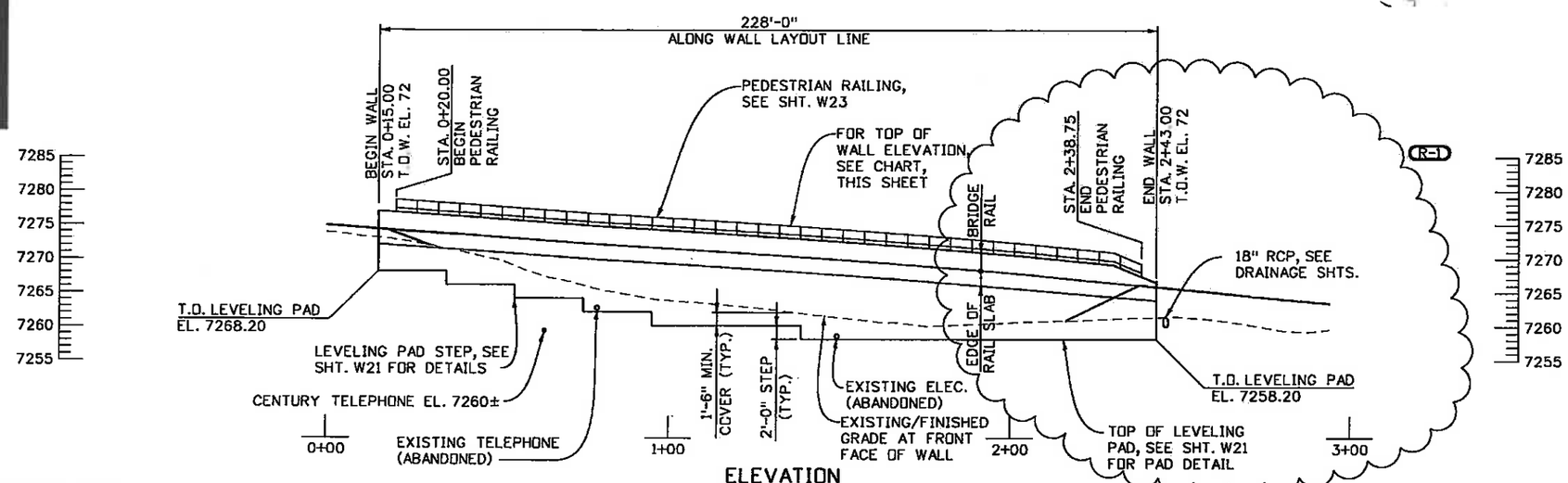

ELEVATION

EAGLE COUNTY

FELSBURG HOLT & ULLEVIG

Design			
Designed By	PRS	Checked By	
Checked By			

Detail			
Detailed By	RAD	Checked By	PRS
DATE	08-08	DATE	08-08
INITIAL		INITIAL	

Quantities			
Quantities By		Checked By	
DATE		DATE	
INITIAL		INITIAL	

Revision Dates (Preliminary Stage Only)

Print Date: 5/11/2010
Drawing File Name: 06193WALLGLA06.dgn
Horiz. Scale: 1:40 Vert. Scale: As Noted
Unit Information Unit Leader Initials

R-D

Sheet Revisions		
Date:	Comments	Init.
5/10/10	REVISED SB ENTRANCE TO MRR ROUNDABOUT	DKH

Colorado Department of Transportation
DOT
714 Grand Avenue, P.O. Box 298
Eagle, CO 81631
Phone: 970-328-6385 FAX: 970-328-2368
Region 3 MLM

As Constructed
No Revisions:
Revised: 6-6-2011
Void:

EDWARDS INTERCHANGE UPGRADE
EB OFF RAMP RETAINING WALL
GENERAL LAYOUT

Designer:	P. STEIN	Structure Numbers	WALL-F-10-P
Detailer:	R. DILLON		
Sheet Subset:	WALL	Subset Sheets:	W16 of 25

Project No./Code
ES3 0702-297
17303
Sheet Number 96X

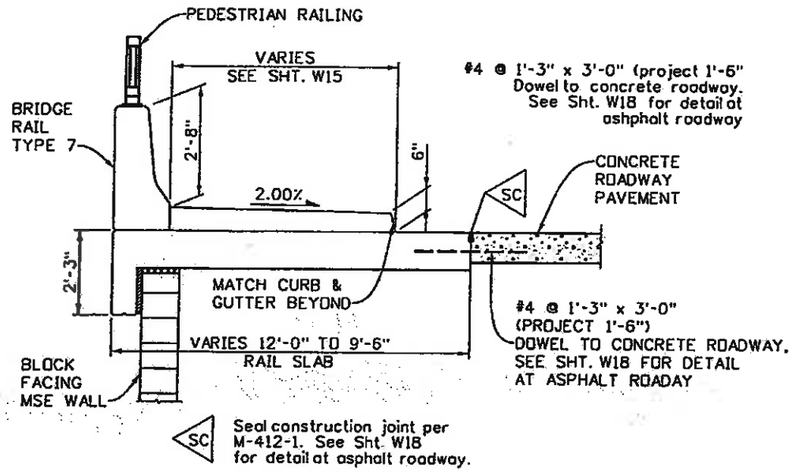

SECTION W15/B W18/B

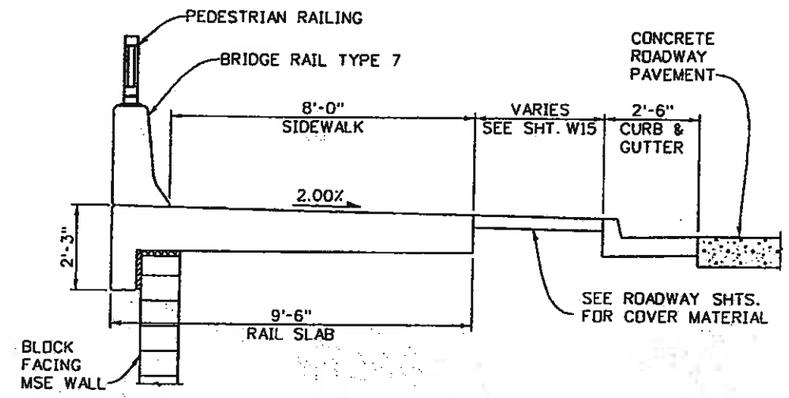

SECTION W15/D W16/D

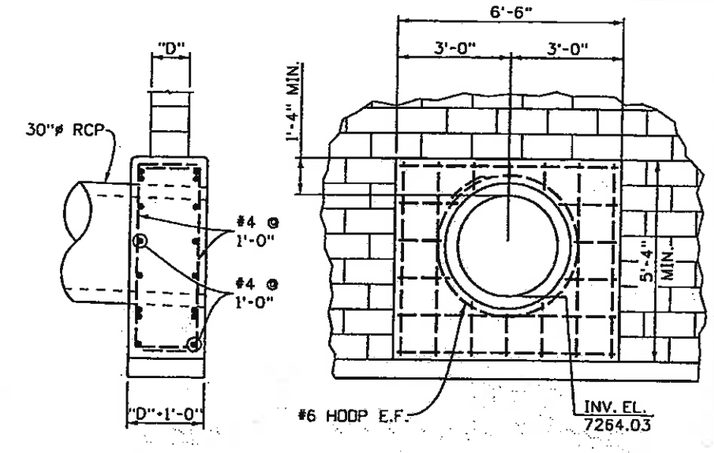

HEADWALL QUANTITIES (FOR INFO. ONLY)

DESCRIPTION	Unit	Totals
CONCRETE CLASS D	Cu.Yd	2.6
REINFORCING STEEL (EPOXY)	Lb.	109

NOTES:

1. CONCRETE SHALL BE CLASS B.
2. CUT BLOCK TO FIT AROUND HEADWALL AS SHOWN.

HEADWALL DETAIL W15/1

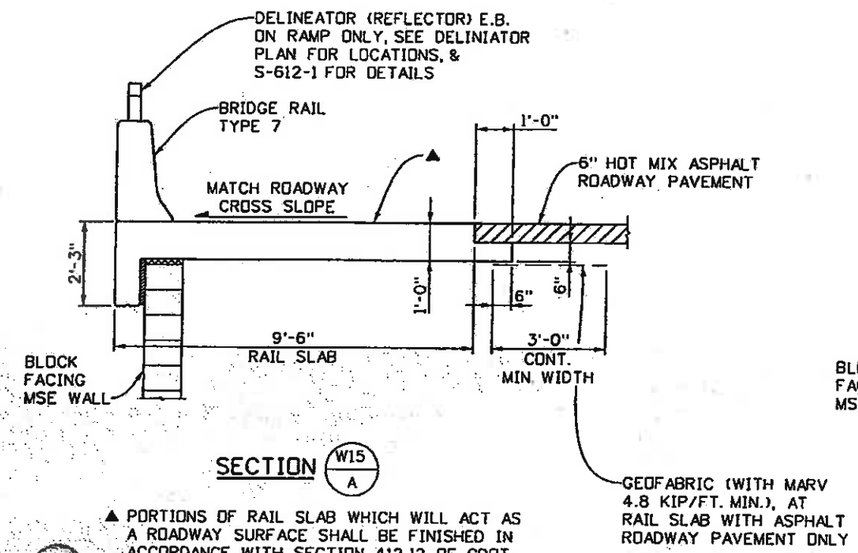

SECTION W15/A

▲ PORTIONS OF RAIL SLAB WHICH WILL ACT AS A ROADWAY SURFACE SHALL BE FINISHED IN ACCORDANCE WITH SECTION 412.12 OF COOT STANDARD SPECIFICATIONS.

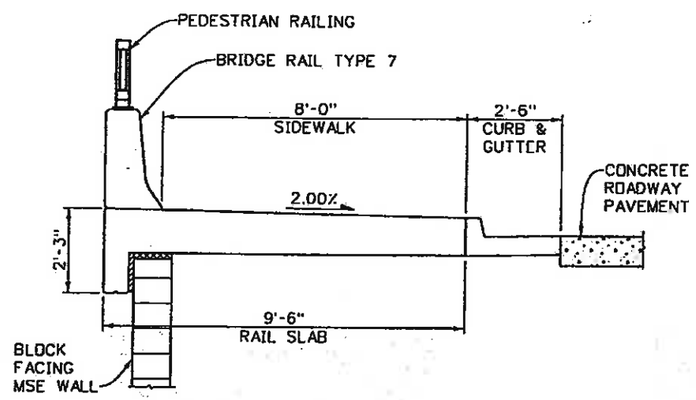

SECTION W15/C W16/C

NOTES:

1. FOR PEDESTRIAN RAILING DETAILS, SEE SHEET W23.
2. FOR BRIDGE RAIL & RAIL SLAB DETAILS, SEE SHEET W18.

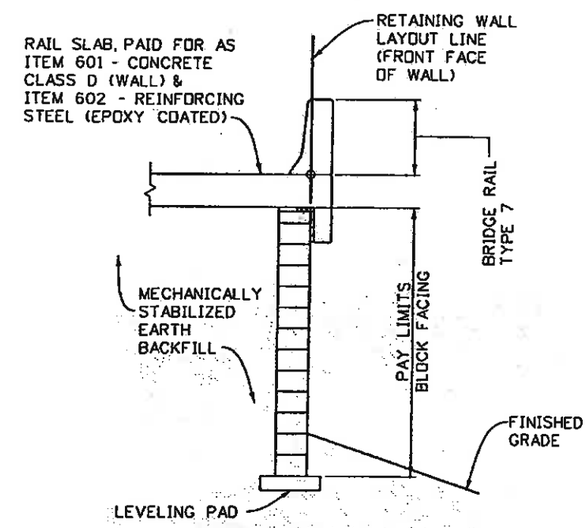

TYPICAL SECTION
MSE RETAINING WALL PAY LIMITS

EAGLE COUNTY

FELSBURG HOLT & ULLEVIG

Print Date: 10/27/2009		Sheet Revisions			
Drawing File Name: 06193WALLMSE04.dgn		Date:	Comments	Init.	
Horiz. Scale: 1:1	Vert. Scale: As Noted				
Unit Information	Unit Leader Initials				

R-X

Colorado Department of Transportation
DOT
714 Grand Avenue, P.O. Box 298
Eagle, CO 81631
Phone: 970-328-6385 FAX: 970-328-2368
Region 3 MLM

As Constructed
No Revisions: 6-6-2011
Revised:
Void:

EDWARDS INTERCHANGE UPGRADE
EB ON & OFF RAMP
RAIL SLAB TYPICAL SECTIONS

Designer:	P. STEIN	Structure Numbers	WALL-F-10-P
Detailer:	R. DILLON		WALL-F-10-Q
Sheet Subset:	WALL	Subset Sheets:	W17 of 25

Project No./Code
ES3 0702-297
17303
Sheet Number 97

Revision Dates (Preliminary Stage Only)

DATE	Que

Date#	INITIAL	DATE	Quantities By
	RAD	08-08	
	PRS	08-08	Checked By

Detailed By	Checked By

Design#	INITIAL	DATE
	PRS	08-08

Designed By	Checked By

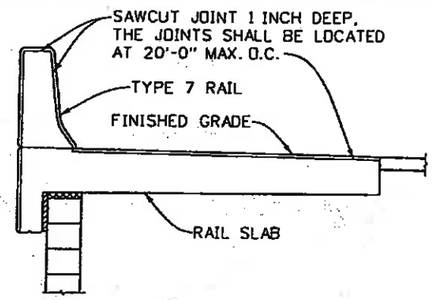

TRANSVERSE CONTRACTION JOINT

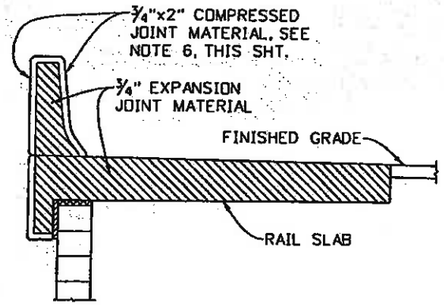

NOTE:
REINFORCING SHALL BE DISCONTINUOUS AT JOINT. PROVIDE MIN. 2" OF COVER FOR REINFORCING ADJACENT TO JOINT.

BRIDGE RAIL/RAIL SLAB EXPANSION JOINT

(SPACE @ 60'-0" MAX. O.C., JOINT LOCATIONS SHALL ALIGN WITH CONCRETE PAVEMENT JOINTS, WHERE APPLICABLE)

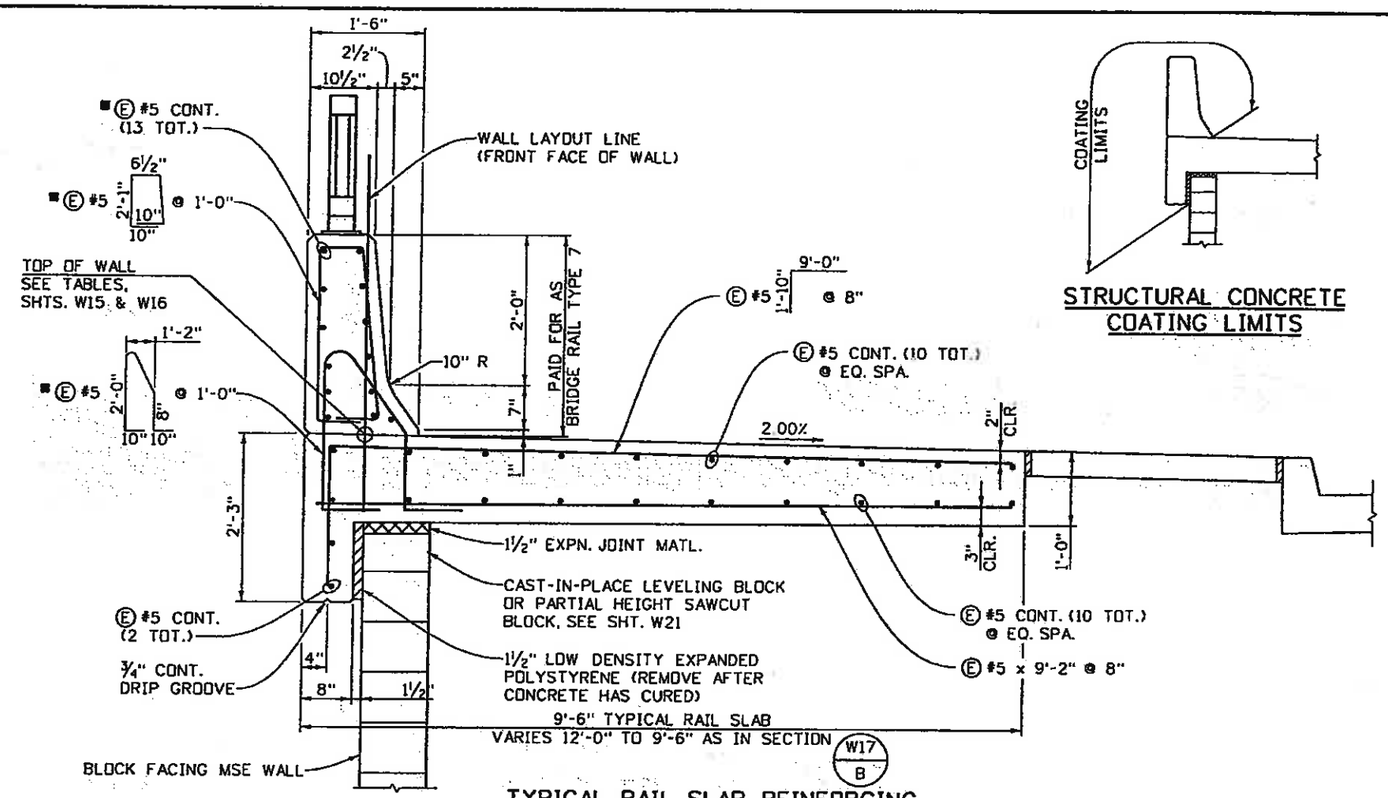

STRUCTURAL CONCRETE COATING LIMITS

TYPICAL RAIL SLAB REINFORCING

■ REINFORCING INCLUDED IN COST OF BRIDGE RAIL TYPE 7 (SPECIAL)

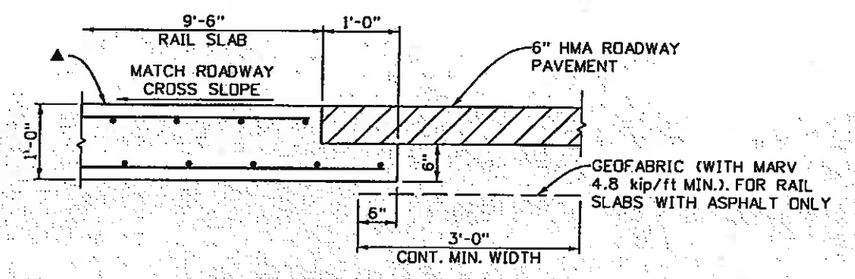

RAIL SLAB EDGE AT ASPHALT ROADWAY PAVEMENT

▲ PORTIONS OF RAIL SLAB WHICH WILL ACT AS A ROADWAY SURFACE SHALL BE FINISHED IN ACCORDANCE WITH SECTIONS 412.12 OF CDOT STANDARD SPECIFICATION.

QUANTITIES (FOR INFORMATION ONLY)

BRIDGE RAIL TYPE 7

DESCRIPTION	Unit	Per Lin. Ft.
CONCRETE CLASS D	Cu.Yd.	0.10
REINFORCING STEEL (EPOXY)	Lb.	13.9

RAIL SLAB

DESCRIPTION	Unit	Per Lin. Ft.
CONCRETE CLASS D	Cu.Yd.	0.41
REINFORCING STEEL (EPOXY)	Lb.	54.3

DESIGN DATA

REINFORCED CONCRETE:

CLASS D CONCRETE F'c = 4,500 PSI
REINFORCING STEEL Fy = 60,000 PSI

NOTES:

1. ALL BRIDGE RAIL AND RAIL SLAB CONCRETE SHALL BE CLASS D. BRIDGE RAIL AND COPING SHALL RECIEVE A CLASS 2 RUBBED FINISH.
2. BRIDGE RAIL CONCRETE AND EPOXY REINFORCING STEEL SHALL CONFORM TO THE REQUIREMENTS OF SECTIONS 601 AND 602. PAYMENT WILL BE MADE UNDER ITEM 606, BRIDGE RAIL TYPE 7.
3. THE SURFACE OF THE RAIL SHALL BE TESTED WITH A 10 FOOT STRAIGHTEDGE LAID ALONG THE SURFACE IN THE LONGITUDINAL DIRECTION. DEVIATION OF THE CONCRETE SURFACE FROM THE STRAIGHTEDGE SHALL BE LESS THAN ¼" PLUS ALLOWANCE FOR ROADWAY HORIZONTAL AND VERTICAL CURVATURE, IF ANY.
4. CONCRETE COVER SHALL BE 2" UNLESS NOTED OTHERWISE.
5. BRIDGE RAIL SHALL BE CONSTRUCTED PLUMB.
6. COMPRESSED JOINT MATERIAL SHALL BE PRE-COMPRESSED CHEMICALLY RESISTANT, OPEN CELL POLYURETHANE FOAM SEALANT, IMPREGNATED WITH A WATER-REPELLANT MATERIAL, WITH ADHESIVE BACKING ON BOTH SIDES. THE JOINT MATERIAL SHALL BE EPOXIED IN PLACE AND ALL SPLICES SEALED, AS RECOMMENDED BY THE SUPPLIER OF THE COMPRESSED JOINT MATERIAL.

EAGLE COUNTY

FELSBURG HOLT & ULLEVIG

Design				Detail				Quan	
Designed By	INITIAL	DATE		Detailed By	INITIAL	DATE		Quantities By	DATE
Checked By	PRS	08-08		Checked By	RAD	08-08		Checked By	08-08

(Preliminary Stage Only)

Revision Dates

DATE			

Print Date: 10/27/2009
Drawing File Name: 06193WALLMSE03.dgn
Horiz. Scale: 1:1 Vert. Scale: As Noted
Unit Information Unit Leader Initials

R-X

Sheet Revisions

Date:	Comments	Init.

Colorado Department of Transportation
DOT
714 Grand Avenue, P.O. Box 298
Eagle, CO 81631
Phone: 970-328-6385 FAX: 970-328-2368
Region 3 MLM

As Constructed
No Revisions: 6-6-2011
Revised:
Void:

EDWARDS INTERCHANGE UPGRADE
EB ON & OFF RAMP
RAIL SLAB DETAILS

Designer:	P. STEIN	Structure Numbers	WALL-F-10-P
Detailer:	R. DILLON		WALL-F-10-Q
Sheet Subset:	WALL	Subset Sheets:	W18 of 25

Project No./Code
ES3 0702-297
17303
Sheet Number 98

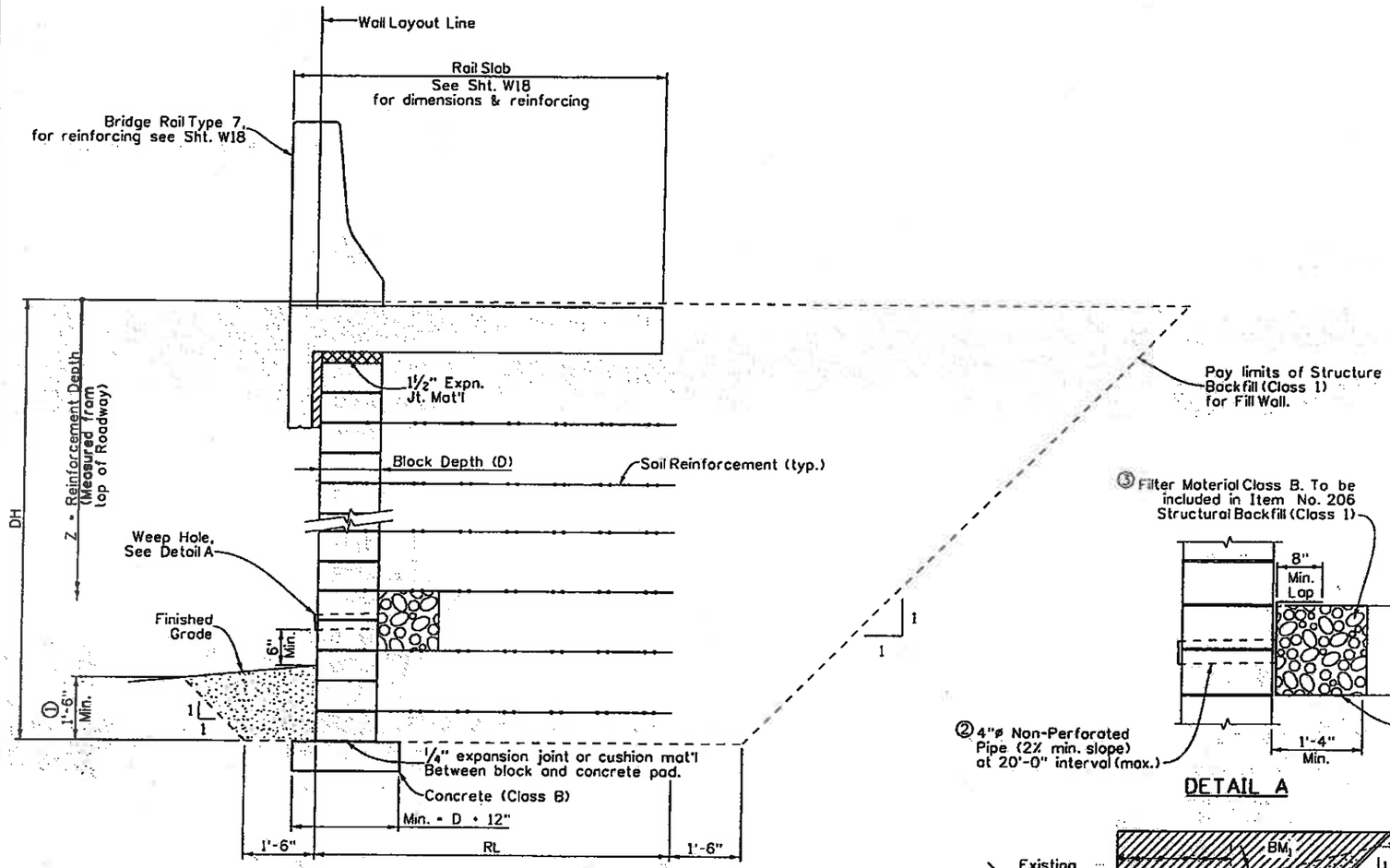

TYPICAL SECTION

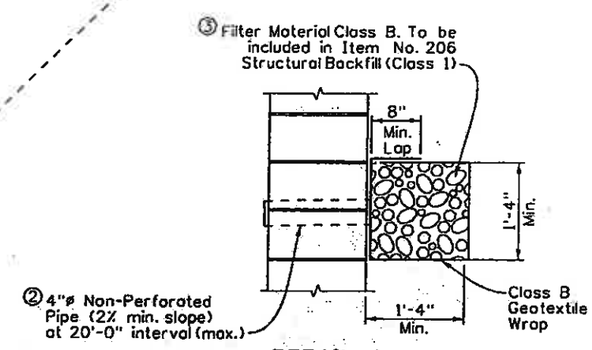

DETAIL A

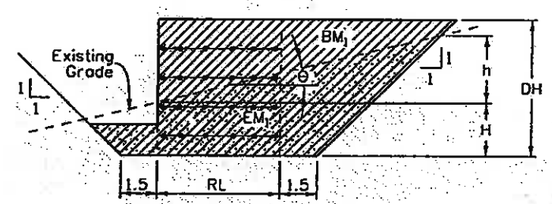

$EM_1 = [(H + \frac{h}{2})(h/TAN\theta) + 0.75H + \frac{(H - 1.5\ TAN\theta)(0.5H + 0.75)}{1 - TAN\theta} - 0.5(H+h)^2]/27$

$h = (H + RL + 1.5)\frac{TAN\theta}{1 - TAN\theta}$

$BM_1 = [DH(RL + 1.50) + 0.5(DH)^2 + 1.5(1.50)^2]/27$

θ = Average angle of existing ground line

$MRS = (DH)(RL)/27$

EARTHWORK QUANTITIES

NOTES:

① 1'-6" (min.) Structure Backfill (Class 2) is required for erosion control and to conceal and protect a stepped leveling pad. the cost for this material shall be included in the cost for Structure Backfill (Class 1).

② All Pipes shall be schedule 40 H.D.P.E.

③ The filter material shall be wrapped with erosion control Class B Geotextiles.

ABBREVIATIONS USED

BM_1	=	Quantities of Structure Backfill (Class 1) without Shoring (c.y./ ft.)
BM_2	=	Quantities of Structure Backfill (Class 1) with Shoring (c.y./ ft)
BP	=	Maximum Required Allowable Bearing Pressure (ksf)
DH	=	Design Height (or, Avg. height for qty. calculations) (ft.)
EM_1	=	Quantity of Structure Excavation without Shoring (c.y./ ft.)
EM_2	=	Quantity of Structure Excavation with Shoring (c.y./ ft.)
H	=	Depth of Excavation at Wall Layout Line (ft.)
LTDS	=	Required Tong Term Design Strength (lb./ in.)
MARV	=	Minimum Average Roll Value (lb./ in.)
NB	=	Total Number of Blocks
RL	=	Reinforcement Length (ft.)
S	=	Tributary reinforcement spacing
TOTAL	=	Sum of required LTDS for all layers (lb./ in.)
MRS	=	Quantity of Mechanical Reinforcement for precribed Soil zone (c.y./ft)

DESIGN DATA

AASHTO, 16th EDITION

Unit weight of γ_{conc} = 150 pcf and γ_{soil} = 125 pcf are assumed.

Internal friction angle of soil for Structure Backfill (class 1) is assumed to be ϕ = 34°. Ka = 0.2827 , K_D = 0.4408.

The 10 kips vehicular Horizontal Impact Load is applied as per The loading diagram on Sht. W20

Coefficient of resistance to direct sliding { = 0.9 (Geogrid) / = 0.6 (Geotextile)(Used Herein)

See project Special Provisions for the relationship between LTDS and MARV of Geosynthetic soil reinforcement, and sacrificial thickness metallic soil reinforcement.

EAGLE COUNTY

FELSBURG HOLT & ULLEVIG

Print Date: 11/5/2009		Sheet Revisions			
Drawing File Name: 06193WALLMSE01.dgn		Date:	Comments	Init.	
Horiz. Scale: 1:1	Vert. Scale: As Noted	R-X			
Unit Information	Unit Leader Initials				

Colorado Department of Transportation
714 Grand Avenue, P.O. Box 298
Eagle, CO 81631
Phone: 970-328-6385 FAX: 970-328-2368
Region 3 MLM

As Constructed	EDWARDS INTERCHANGE UPGRADE EB ON & OFF RAMP MSE WALL DETAILS (1 OF 3)			Project No./Code
No Revisions: 6-6-2011				ES3 0702-297
Revised:	Designer: P. STEIN	Structure Numbers	WALL-F-10-P	17303
Void:	Detailer: R. DILLON		WALL-F-10-Q	
	Sheet Subset: WALL	Subset Sheets: W19 of 25		Sheet Number 99

GENERAL NOTES

The required LTDS for different reinforcement layer depth (Z) is determined with the following equations, using the values as depicted in the loading diagram.

$\sigma_V = (Z - 1.0)\cdot\gamma_{soil} + 1.0\cdot(\gamma_{conc}) + 2.0\cdot(\gamma_{soil})$

LTDS $\geq (K\cdot\sigma_V + \text{Rail Impact})S/12$
Where K = Ka for Geosynthetic reinforcement or
K = K_0 to Ka for metallic reinforcement - see AASHTO fig. 5.8.4.1A

Rail Impact = [1 - (Z - 1)/14.1083] 202.57
Where 1.0 ≤ Z ≤ 14.1083

NOTES:

① Spacing S for computation of LTDS is shown for Pattern A with the top layer starting 1 block down from the bottom of the rail anchor slab. Use similar logic to determine S for other reinforcement patterns.

② Graph values must be multiplied by S in feet to obtain the required LTDS.

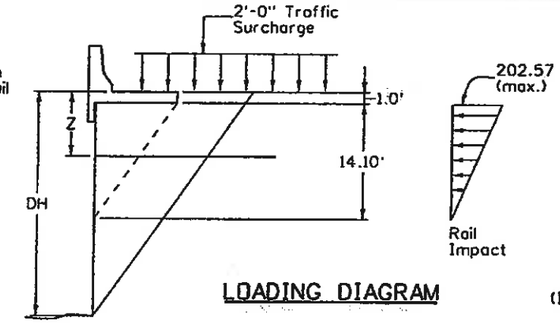

LOADING DIAGRAM

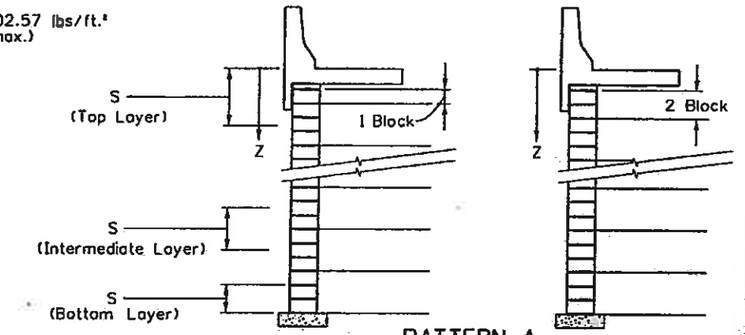

PATTERN A

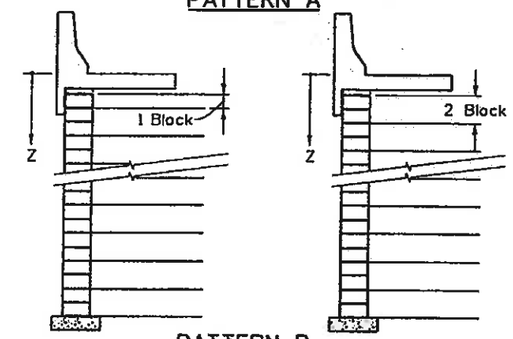

PATTERN B

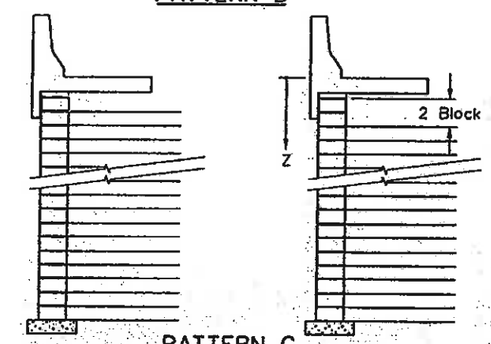

PATTERN C

REINFORCEMENT PATTERNS

(See Note 1)

TABLE

*DESIGN PARAMETERS FOR WALL HEIGHTS FROM 2.67' TO 30.00'

DH	NB	RL **	BP	BM_1	BM_2
2.67	2	6.00	0.79	1.00	1.00
3.33	3	6.00	1.00	1.26	1.26
4.00	4	6.00	1.22	1.53	1.53
4.67	5	6.00	1.45	1.82	1.82
5.33	6	6.00	1.67	2.13	1.82
6.00	7	6.00	1.88	2.46	1.82
6.67	8	6.67	2.08	2.96	2.18
7.33	9	7.33	2.26	3.52	2.59
8.00	10	8.00	2.42	4.12	3.05
8.67	11	8.00	2.56	4.57	3.33
9.33	12	8.00	2.51	5.02	3.63
10.00	13	8.00	2.56	5.50	3.93
10.67	14	8.00	2.62	5.99	4.24
11.33	15	7.93	2.69	6.46	4.53
12.00	16	8.40	2.76	7.19	5.07
12.67	17	8.87	2.83	7.96	5.64
13.33	18	9.33	2.90	8.77	6.23
14.00	19	9.80	2.98	9.61	6.87
14.67	20	10.27	3.05	10.50	7.53
15.33	21	10.73	3.13	11.43	8.23
16.00	22	11.20	3.21	12.39	8.96
16.67	23	11.67	3.29	13.40	9.72
17.33	24	12.13	3.37	14.44	10.51
18.00	25	12.60	3.46	15.53	11.33
18.67	26	13.07	3.54	16.65	12.19
19.33	27	13.53	3.62	17.81	13.08
20.00	28	14.00	3.71	19.01	14.00
20.67	29	14.47	3.80	20.26	14.96
21.33	30	14.93	3.88	21.54	15.94
22.00	31	15.40	3.97	22.86	16.96
22.67	32	15.87	4.06	24.22	18.01
23.33	33	16.33	4.15	25.62	19.09
24.00	34	16.80	4.24	27.06	20.21
24.67	35	17.27	4.32	28.54	21.35
25.33	36	17.73	4.41	30.06	22.53
26.00	37	18.20	4.51	31.61	23.74
26.67	38	18.67	4.60	33.21	24.99
27.33	39	19.13	4.69	34.85	26.26
28.00	40	19.60	4.78	36.52	27.57
28.67	41	20.07	4.87	38.24	28.91
29.33	42	20.53	4.96	40.00	30.28
[illegible]	[illegible]	21.00	5.05	41.79	31.69

[illegible] minimum block height of 8"

[illegible] Project Special Provisions

[illegible] Minimum [illegible] requirements.

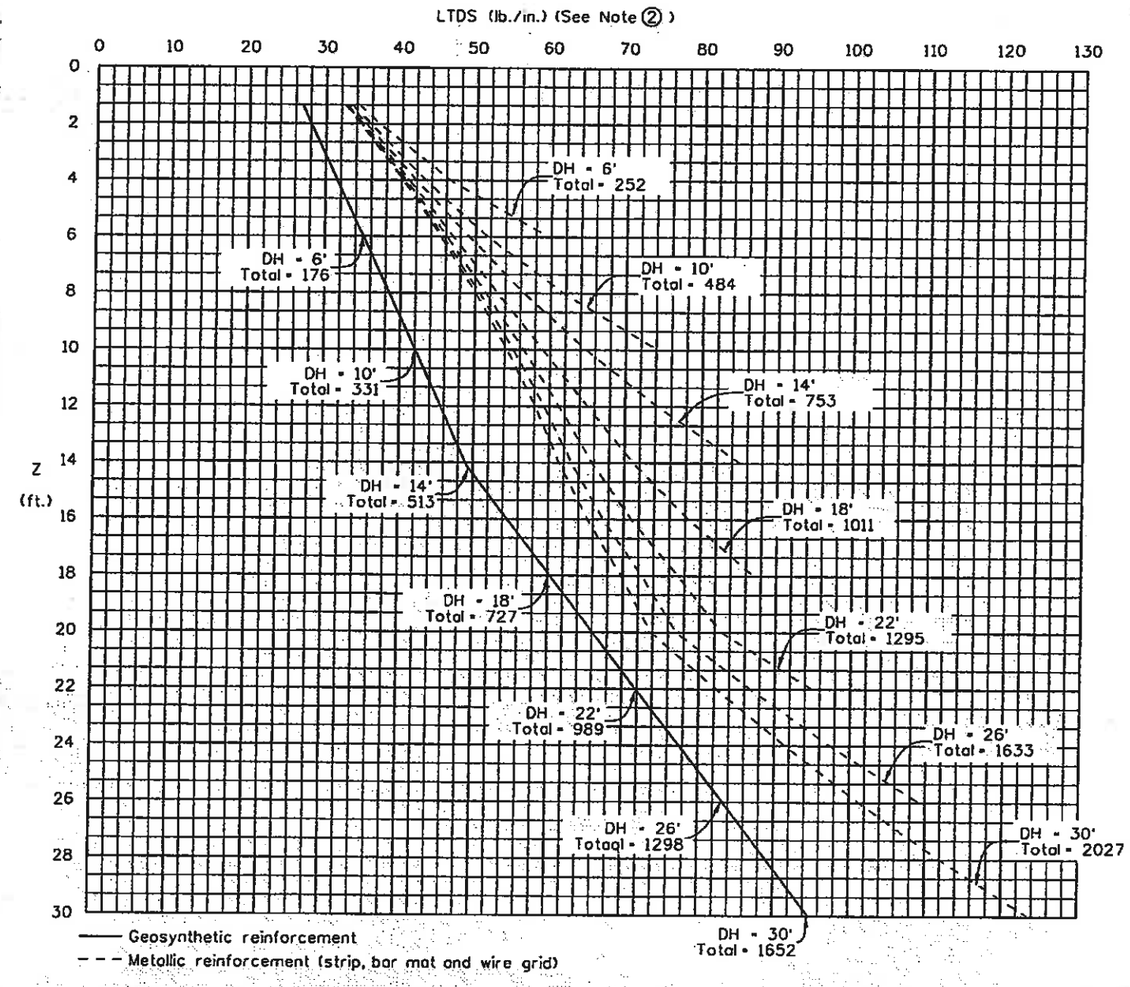

EAGLE COUNTY

HELSBURG HOLT & ASSOCIATES

Design	INITIAL	DATE	Detail	INITIAL	DATE
Designed By	PRS	07-09	Detailed By	RAD	07-09
Checked By			Checked By	PRS	07-09

Revision Dates (Preliminary Stage Only)

DATE | Quantities By | Checked By

Print Date: 10/27/2009
Drawing File Name: 06193WALLMSE06.dgn
Horiz. Scale: 1:1 Vert. Scale: As Noted
Unit Information Unit Leader Initials

R-X

Sheet Revisions		
Date:	Comments	Init.

Colorado Department of Transportation
CDOT
714 Grand Avenue, P.O. Box 298
Eagle, CO 81631
Phone: 970-328-6385 FAX: 970-328-2368
Region 3 MLM

As Constructed
No Revisions: 6-6-2011
Revised:
Void:

EDWARDS INTERCHANGE UPGRADE
EB ON & OFF RAMP
MSE WALL DETAILS (2 OF 3)

Designer:	P. STEIN	Structure Numbers	WALL-F-10-P
Detailer:	R. DILLON		WALL-F-10-Q
Sheet Subset:	WALL	Subset Sheets:	W20 of 25

Project No./Code
ES3 0702-297
17303
Sheet Number 100

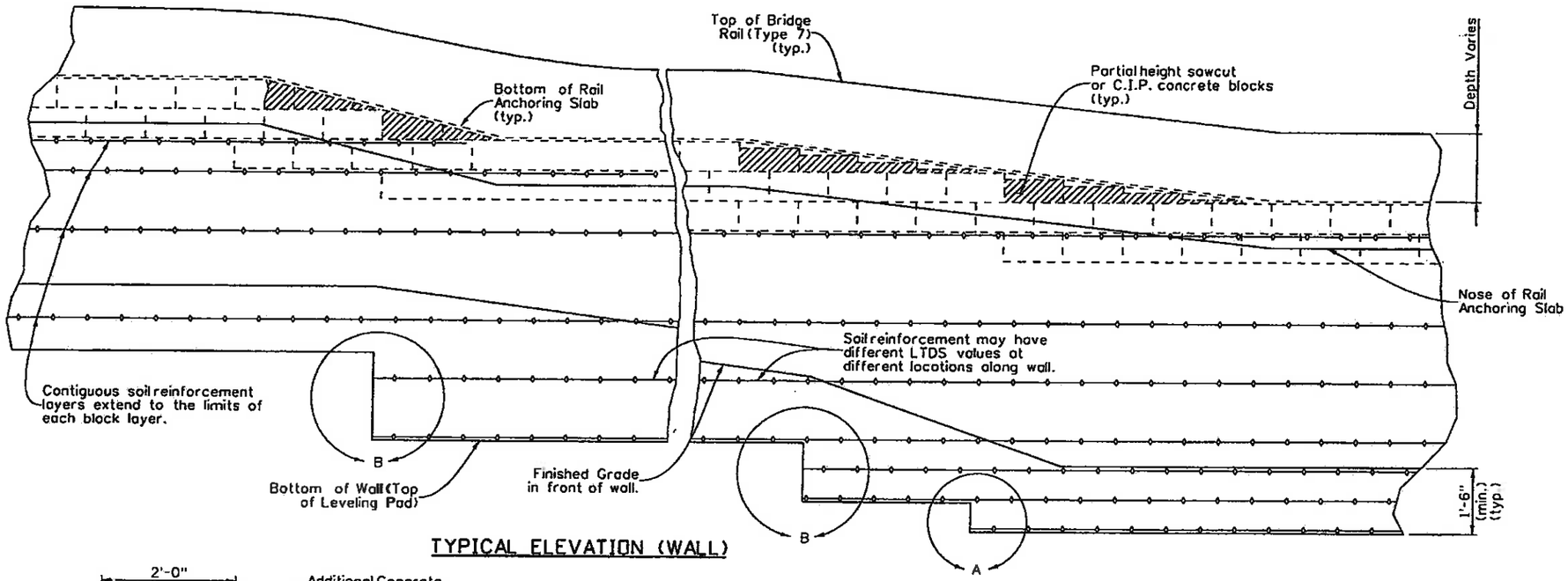

TYPICAL ELEVATION (WALL)

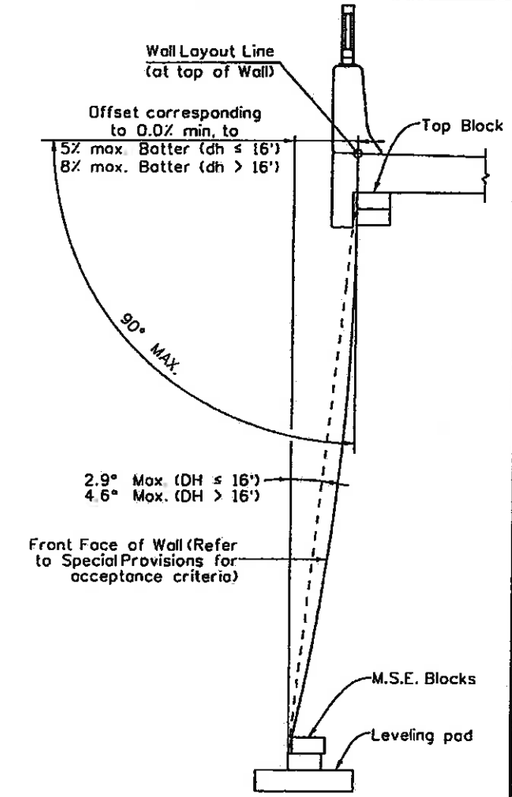

WALL OFFSET

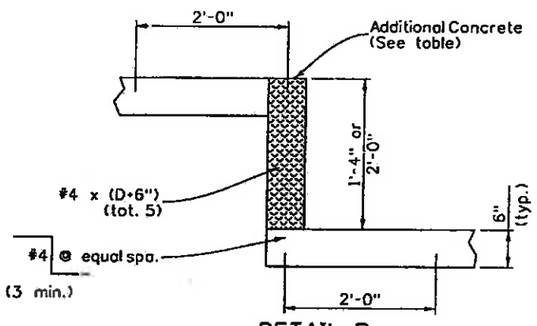

DETAIL B
(2 or 3 Block Step)

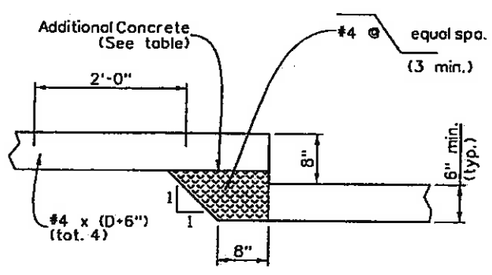

DETAIL A
(1 Block Step)

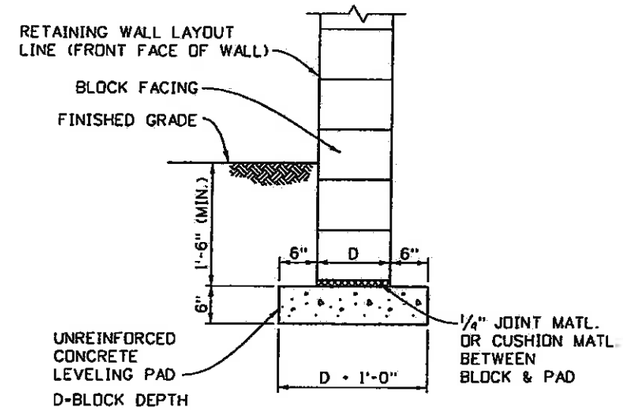

LEVELING PAD DETAIL

LEVELING PAD AND STEP QUANTITIES (For Information only)*

DESCRIPTIONS		UNIT	QUANTITIES
LEVELING PAD CONCRETE		c.y./ft.	0.036
1 BLOCK STEP	STEEL	lb/step	14.17
	ADDITIONAL CONCRETE	c.y./step	0.049
2 BLOCK STEP	STEEL	lb/step	16.00
	ADDITIONAL CONCRETE	c.y./step	0.049
3 BLOCK STEP	STEEL	lb/step	17.34
	ADDITIONAL CONCRETE	c.y./step	0.074

* Based on 1'-0" nominal block depth (D)

NOTES:

1. CAST-IN-PLACE LEVELING BLOCK AND LEVELING PAD SHALL BE CONCRETE CLASS B.
2. JOINT MATERIAL OR CUSHION MATL., LEVELING PAD CONCRETE, LEVELING BLOCK CONCRETE & #4x10" DOWELS SHALL NOT BE PAID FOR SEPARATELY, BUT SHALL BE INCLUDED IN THE COST OF ITEM 504 - BLOCK FACING.

EAGLE COUNTY

FELSBURG HOLT & ULLEVIG

Revision Dates (Preliminary Stage Only)	DATE

Detail	INITIAL	DATE	Quantities By	Checked By
	RAO	08-08	08-08	PRS

Design	INITIAL	DATE	Detailed By	Checked By
	PRS	08-08		

Designed By	Checked By

Print Date: 10/27/2009
Drawing File Name: 06193WALLMSE02.dgn
Horiz. Scale: 1:1 Vert. Scale: As Noted
Unit Information Unit Leader Initials

R-X

Sheet Revisions

Date:	Comments	Init.

Colorado Department of Transportation
CDOT
714 Grand Avenue, P.O. Box 298
Eagle, CO 81631
Phone: 970-328-6385 FAX: 970-328-2368
Region 3 MLM

As Constructed
No Revisions: 6-6-2011
Revised:
Void:

EDWARDS INTERCHANGE UPGRADE
EB ON & OFF RAMP
MSE WALL DETAILS (3 OF 3)

Designer:	P. STEIN	Structure Numbers	WALL-F-10-P
Detailer:	R. DILLON		WALL-F-10-Q
Sheet Subset:	WALL	Subset Sheets:	W21 of 25

Project No./Code
ES3 0702-297
17303
Sheet Number 101

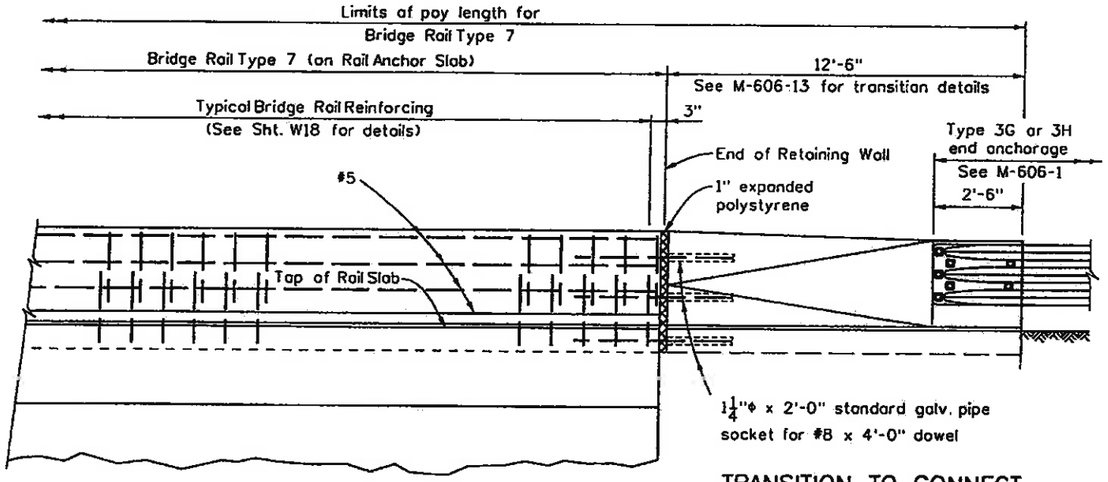

ELEVATION

TRANSITION TO CONNECT
BRIDGE RAIL TYPE 7
TO GUARD RAIL TYPE 3

EB On Ramp at Wall Sta. 4+40.00, see Sht. W15
EB Off Ramp at Wall Sta. 0+63.00, see Sht. W16

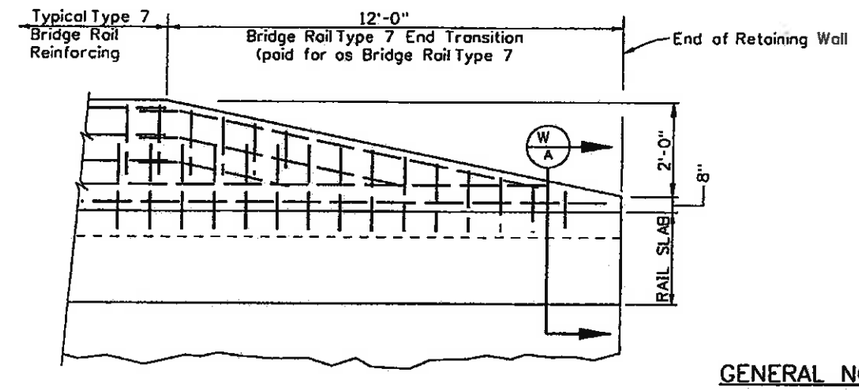

BRIDGE RAIL TYPE 7 END TRANSITION

EB On Ramp at Wall Sta. 0+12.00, see Sht. W15
EB Off Ramp at Wall Sta. 2+95.00, see Sht. W16

GENERAL NOTES:

Backfill retaining walls before barrier is placed.

All bridge rail concrete shall be Class D.

Longitudinal reinforcement shall stop at all expansion joints.

Bridge rail shall be constructed plumb.

TYPE 7 BRIDGE RAIL NOTES:

See Std. M-606-13 for additional transition details.

Concrete and reinforcing steel shall conform to the requirements of Sections 601 and 602. Payment will be made under Item 606, Bridge Rail Type 7.

The surface of the rail shall be tested with a 10 foot straightedge laid along the surface in the longitudinal direction. Deviation of the concrete surface from the straightedge shall be less than ¼" plus allowance for roadway horizontal and vertical curvature, if any.

DESIGN DATA

Reinforced Concrete:
Class D Concrete: f'c = 4,500 psi
Reinforcing Steel: fy = 60,000 psi

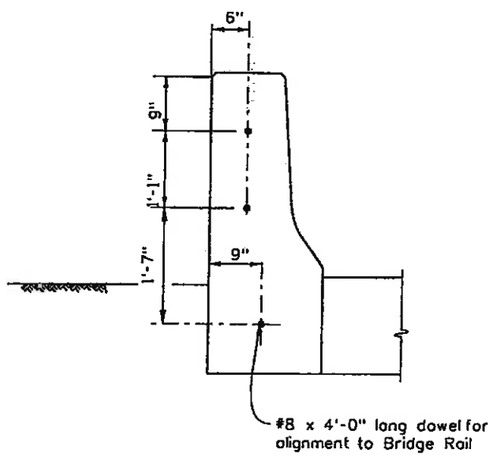

TRANSITION SECTION
Dowel Location

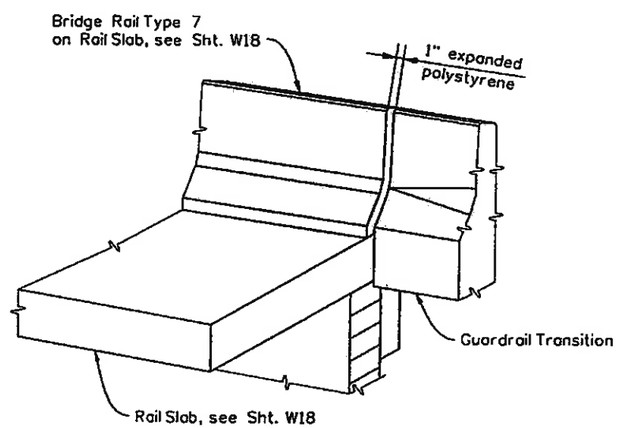

ISOMETRIC VIEW

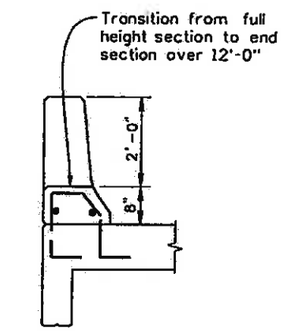

END SECTION (W/A)

EAGLE COUNTY

FELSBURG HOLT & ULLEVIG

Print Date: 10/27/2009		Sheet Revisions			Colorado Department of Transportation	As Constructed	EDWARDS INTERCHANGE UPGRADE BRIDGE RAIL TYPE 7 TRANSITION DETAILS	Project No./Code
Drawing File Name: D6193WALLRAIL01.DGN		Date:	Comments	Init.	DOT 714 Grand Avenue, P.O. Box 298 Eagle, CO 81631 Phone: 970-328-6385 FAX: 970-328-2368	No Revisions: 6-6-2011		ES3 0702-297
Horiz. Scale: 1:1	Vert. Scale: As Noted					Revised:	Designer: P. STEIN / Structure Numbers: WALL-F-10-P	17303
Unit Information	Unit Leader Initials				Region 3 MLM	Void:	Detailer: R. DILLON / WALL-F-10-Q	
							Sheet Subset: WALL / Subset Sheets: W22 of 25	Sheet Number 102

R-X

Design	INITIAL	DATE	Detail	INITIAL	DATE	Quantities By	Checked By
Designed By	PRS	08-08	Detailed By	RAD	08-08		
Checked By			Checked By	PRS	08-08		

Revision Dates (Preliminary Stage Only)

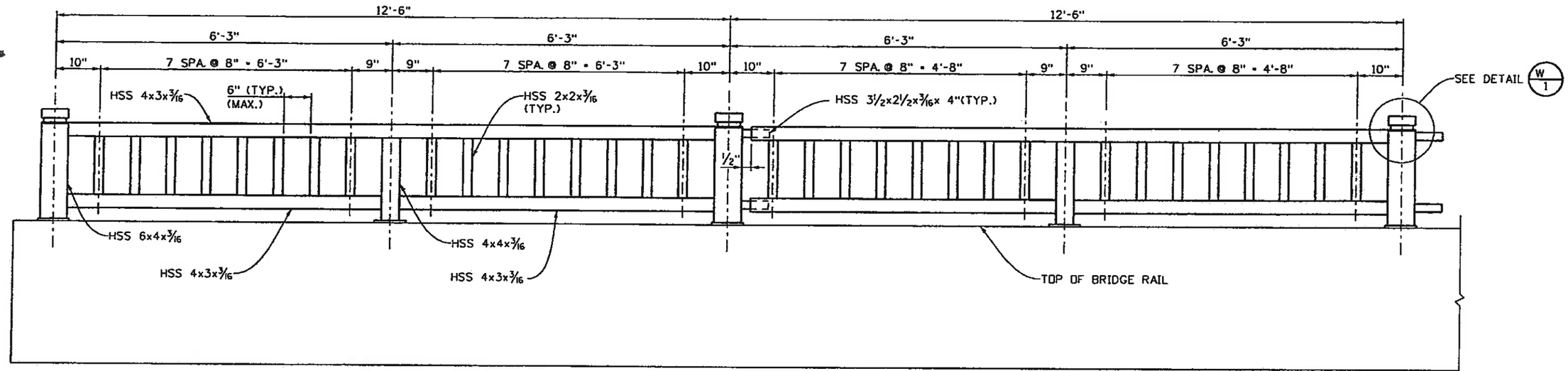

END PANEL

TYPICAL PANEL

TYPICAL ELEVATION

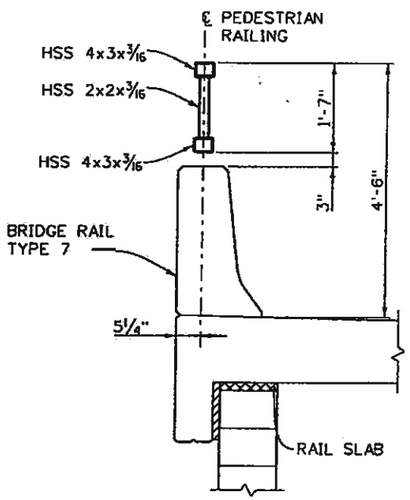

TYPICAL SECTION

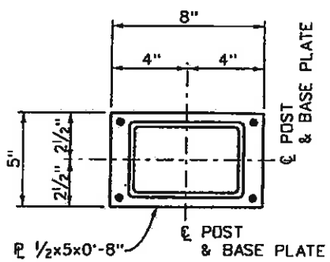

PLAN

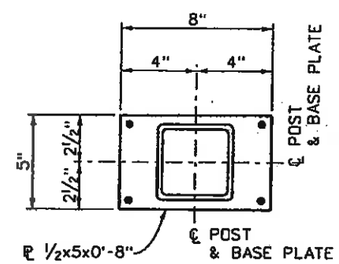

PLAN

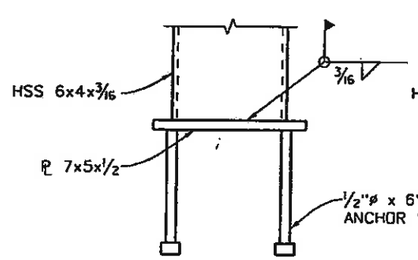

ELEVATION

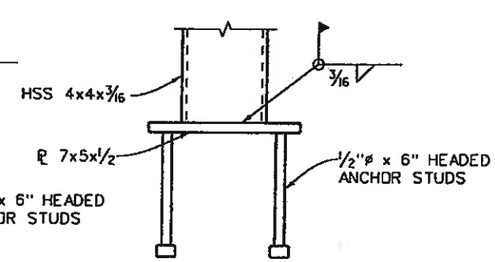

ELEVATION

BASE PLATE DETAILS
(GALVANIZE AFTER FABRICATION)

NOTES:

1. PANELS SHALL BE BENT TO FIT HORIZONTAL CURVES. SEE WALL PLANS & GEOMETRY, SHTS. W4, W15 & W16.
2. RAILING PANELS SHALL BE FABRICATED TO FIT THE GRADE OF THE TOP OF THE RETAINING WALLS. VERTICAL MEMBERS OF THE PANELS SHALL BE PLUMB AFTER ERECTION.
3. FENCE PANELS SHALL BE PAINTED AFTER FABRICATION IN ACCORDANCE WITH SECTION 509 OF THE CDOT STANDARD SPECIFICATIONS. THE COLOR SHAL BE EQUIVALENT TO FEDERAL STANDARD 595B, COLOR NO. 14241.
4. PRIOR TO FABRICATION OF THE PEDESTRIAN RAILING, THREE SETS OF SHOP DRAWINGS WHICH COMPLY WITH THE REQUIREMENTS OF SECTION 105, SHALL BE SUBMITTED TO THE ENGINEER FOR REVIEW.

STRUCTURAL STEEL:
STRUCTURAL TUBING: ASTM A-500 GRADE B
BAR & PLATE: ASTM A-709 GRADE 36

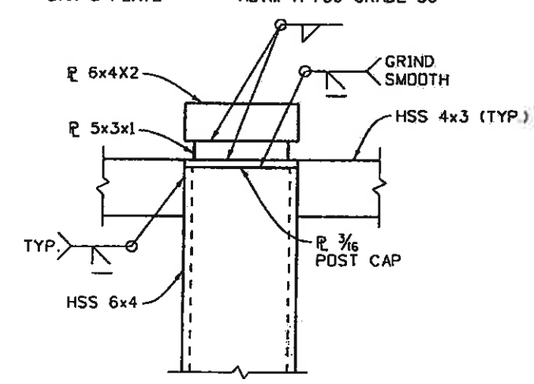

DETAIL W/1

EAGLE COUNTY

FELSBURG HOLT & ULLEVIG

Print Date: 10/27/2009		Sheet Revisions			
Drawing File Name: 06193WALLPEDRAIL02.DGN		Date:	Comments	Init.	
Horiz. Scale: 1:1	Vert. Scale: As Noted				
Unit Information	Unit Leader Initials				

R-X

Colorado Department of Transportation
714 Grand Avenue, P.O. Box 298
Eagle, CO 81631
Phone: 970-328-6385 FAX: 970-328-2368
Region 3 MLM

As Constructed
No Revisions: 6-6-2011
Revised:
Void:

EDWARDS INTERCHANGE UPGRADE
EB ON & OFF RAMP
PEDESTRIAN RAILING

Designer:	P. STEIN	Structure Numbers	WALL-F-10-P
Detailer:	K. SCHNEIDER		WALL-F-10-Q
Sheet Subset:	WALL	Subset Sheets:	W23 of 25

Project No./Code
ES3 0702-297
17303
Sheet Number 108

Design: Designed By / Checked By — INITIAL PRS — DATE 08-08
Detail: Detailed By / Checked By — INITIAL RAD / PRS — DATE 08-08 / 08-08
Quantities By / Checked By — DATE
Revision Dates (Preliminary Stage Only)

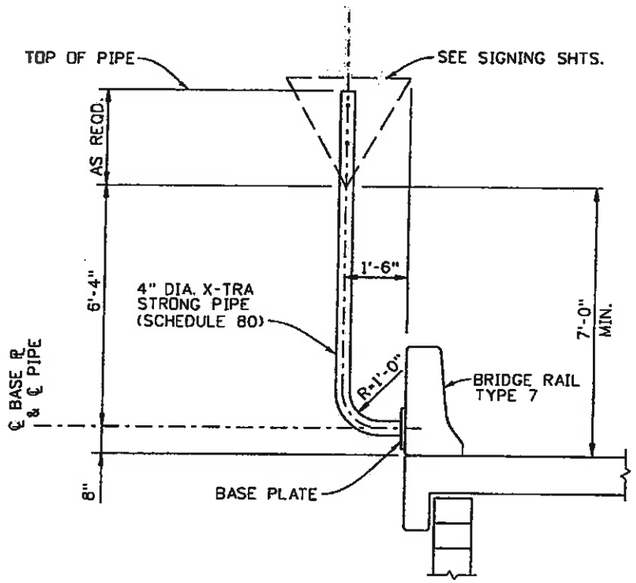

ELEVATION AT BRIDGE RAIL (TYPE 7)

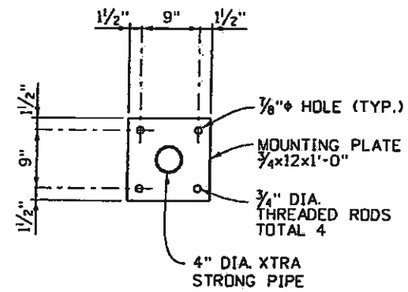

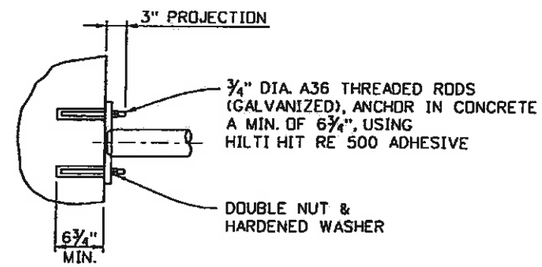

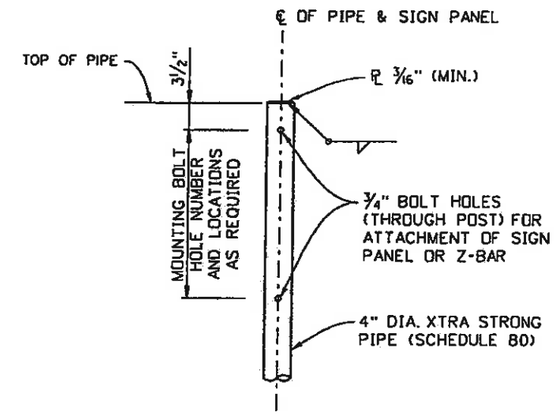

TOP OF POST DETAIL

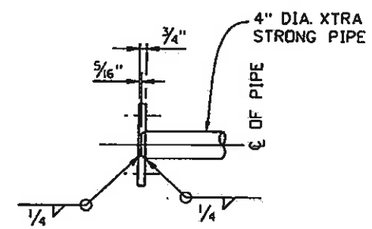

MOUNTING PLATE & ANCHORAGE DETAILS

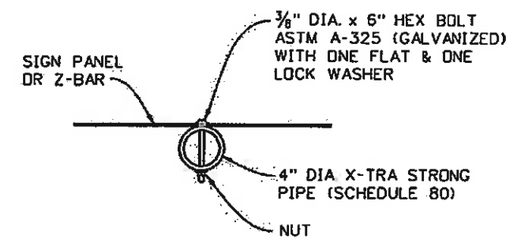

TYPICAL SECTION AT BOLTED CONNECTIONS

NOTES:

REFER TO WALL PLANS, SHTS. W15 & W16 FOR SPECIFIC LOCATIONS OF RAIL MOUNTED SIGNS.

SEE PROPOSED SIGNING, SHT. SS-02 FOR SIGN DETAILS.

STRUCTURAL STEEL PIPE SHALL BE ASTM A53, GRADE B. MOUNTING PLATE ANCHOR BOLTS SHALL BE ¾" DIA. THREADED RODS (ASTM A-36, GALVANIZED).

ALL OTHER STRUCTURAL STEEL SHALL AASHTO M-183 (ASTM A-36).

THE SIGN BRACKET ASSEMBLY (MOUNTING PLATE AND PIPE), AND THE ANCHOR BOLT ASSEMBLY SHALL BE GALVANIZED AFTER FABRICATION.

THE SIGN BRACKET VERTICAL PIPE WHICH SUPPORTS THE SIGN PANEL SHALL BE ERECTED PLUMB.

FOR BOTH CLASS I AND CLASS II SIGN PANEL MOUNTING BOLT LOCATIONS ON POSTS, SEE M&S STANDARDS, JULY 2006, STANDARD PLAN NOS. S-614-2, S-614-3, S-614-8, S-614-20, AND S-614-22.

ALL BOLTS, NUTS, AND WASHERS REQUIRED FOR SIGN MOUNTING SHALL BE GALVANIZED.

PAYMENT FOR RAIL MOUNTED SIGN SUPPORT SHALL BE MADE UNDER ITEM 614 - SIGN POST (SPECIAL), AND IS TABULATED IN THE SIGNING PLANS.

EAGLE COUNTY

FELSBURG HOLT & ULLEVIG

Design	INITIAL	DATE
Designed By	PRS	08-08
Checked By		

Detail	INITIAL	DATE
Detailed By	RAD	08-08
Checked By	PRS	08-08

Quantities	DATE
Quantities By	
Checked By	

Revision Dates	DATE
(Preliminary Stage Only)	

Print Date: 10/27/2009
Drawing File Name: 06193WALLMSC01.dgn
Horiz. Scale: 1:1 Vert. Scale: As Noted
Unit Information Unit Leader Initials

R-X

Sheet Revisions		
Date:	Comments	Init.

Colorado Department of Transportation
DOT
714 Grand Avenue, P.O. Box 298
Eagle, CO 81631
Phone: 970-328-6385 FAX: 970-328-2368
Region 3 MLM

As Constructed
No Revisions: 6-6-2011
Revised:
Void:

EDWARDS INTERCHANGE UPGRADE
RAIL MOUNTED SIGN SUPPORT

Designer:	P. STEIN	Structure Numbers	WALL-F-10-P
Detailer:	R. DILLON		WALL-F-10-Q
Sheet Subset:	WALL	Subset Sheets:	W24 of 25

Project No./Code
ES3 0702-297
17303
Sheet Number 104

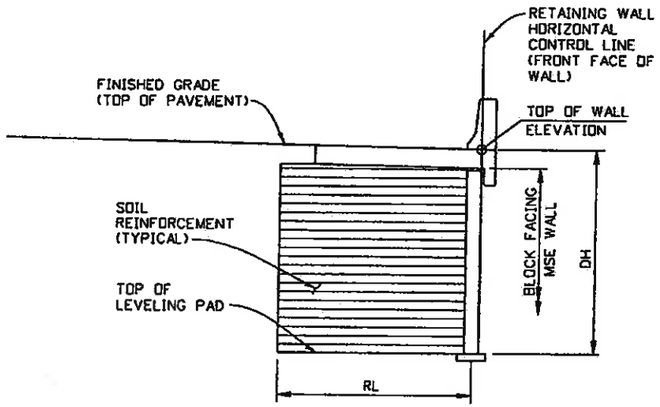

MECHANICAL REINFORCEMENT OF SOIL

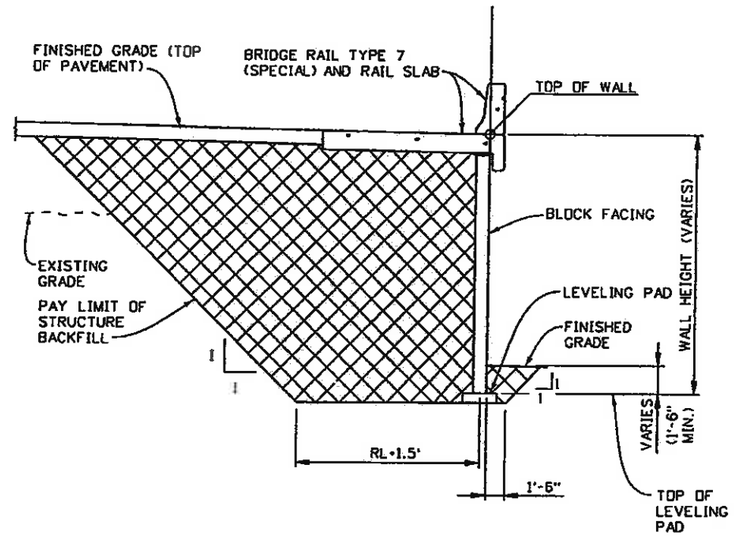

STRUCTURE BACKFILL

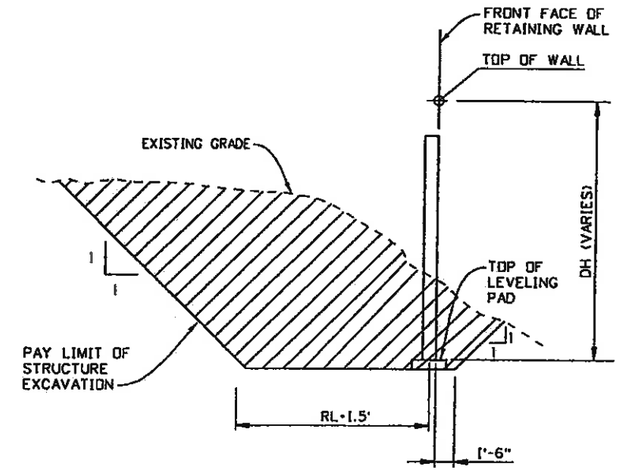

STRUCTURE EXCAVATION

EXCAVATION AND BACKFILL DETAILS

LEGEND

- PAY LIMITS FOR STRUCTURE EXCAVATION
- PAY LIMITS FOR STRUCTURE BACKFILL (CLASS 1)
- PAY LIMITS FOR MECHANICALLY STABILIZED EARTH

ABBREVIATIONS

DH = DESIGN HEIGHT (FT.)
RL = REINFORCING LENGTH (FT.)

Design	INITIAL	DATE
Designed By	PRS	08-08
Checked By		

Detail	INITIAL	DATE
Detailed By	RAD	08-08
Checked By	PRS	08-08

Quan	
Quantities By	
Checked By	

Revision Dates (Preliminary Stage Only) | DATE

EAGLE COUNTY

FELSBURG HOLT & ULLEVIG

Print Date: 10/27/2009
Drawing File Name: 06193WALLMSE05.dgn
Horiz. Scale: 1:1 Vert. Scale: As Noted
Unit Information Unit Leader Initials

R-X

Sheet Revisions		
Date:	Comments	Init.

Colorado Department of Transportation
DOT
714 Grand Avenue, P.O. Box 298
Eagle, CO 81631
Phone: 970-328-6385 FAX: 970-328-2368
Region 3 MLM

As Constructed
No Revisions: 6-6-2011
Revised:
Void:

EDWARDS INTERCHANGE UPGRADE
MSE RETAINING WALL
EXCAVATION & BACKFILL DETAILS

Designer:	P. STEIN	Structure Numbers	WALL-F-10-P
Detailer:	R. DILLON		WALL-F-10-Q
Sheet Subset:	WALL	Subset Sheets:	W25 of 25

Project No./Code
ES3 0702-297
17303
Sheet Number 105